# AQUAFLAIR

AIR-COOLED WATER CHILLERS
0574A – 0644A – 0744A – 0964A – 1084A – 1204A

AIR-COOLED HEAT PUMPS
0574A – 0644A – 0744A – 00964A – 1084A – 1204A

CHILLERS WITH FREE COOLING FUNCTION
0574A – 0644A – 0744A – 0964A – 1084A – 1204A

## INSTRUCTION MANUAL

GB




AQUAFLAIR

*IMPORTANT: This manual is protected by copyright laws.*
*The distribution of this information to unauthorised persons and the reproduction, even in part, of this manual is therefore prohibited.*

| Release: 1.1 | Date: 20-02-2004 |
| --- | --- |
| Checked by: | |

UNIFLAIR SpA policy is one of continuous technological innovation and the Company therefore reserves the right to amend any data herein without prior notice.

# CONTENTS


| | | |
|---|---|---|
| WARNINGS | Page. | 4 |
| SYMBOLS USED | | 5 |
| SAFETY | | 5 |
| **GENERAL DESCRIPTION** | | |
| Documentation included with the unit | | 7 |
| Available versions and accessories | | 8 |
| Data plate | | 9 |
| General description and intended use of the unit | | 10 |
| Function limits air and water temperature | | 10 |
| Access to main components | | 12 |
| Description of the main components of the unit | | 14 |
| Dimensions and weights | | 18 |
| Partial Heat Recovery | | 19 |
| Total Heat Recovery | | 20 |
| Free Cooling | | 24 |
| **INSTALLATION** | | |
| Transport and handling | | 27 |
| Receiving and storing the unit | | 28 |
| Positioning the unit – working space | | 28 |
| Water connections | | 29 |
| Low-temperature operation with anti-freeze mixture | | 31 |
| Electrical connections | | 32 |
| Remote control, local networks and supervision systems | | 34 |
| Fitting the optional RS485 board | | 36 |
| Check list for start-up and testing | | 37 |
| **PROGRAMMING AND REGULATION** | | |
| Regulation of cooling capacity | | 39 |
| Setting the safety devices | | 40 |
| **TECHNICAL DATA** | | |
| Current absorption | | 41 |
| Carateristics | | 44 |
| Noise levels | | 45 |
| **PROBLEM SOLVING** | | |
| Guide to problem solving | | 52 |
| Refrigerant charge | | 52 |
| Bleeding the water circuit | | 56 |
| Maintenance and cleaning | | 56 |
| Changing the filter gride | | 57 |
| Changing the air filter | | 57 |

This unit has been subjected to risk analysis under EC Directive 98/37/CEE (*89/392/CEE*). The technical solutions implemented during the design phase are described in the unit's technical file.

This equipment is manufactured to function safely for the purposes for which it was designed **as long as the installation, operation and maintenance are carried out according to the instructions in this manual and on the labels attached to the unit.**

Warnings in this manual which are particularly important for user safety are shown by this danger symbol.

## IMPORTANT WARNINGS



This unit contains refrigerant gas circuits, chilled water under pressure, live electrical components, hot surfaces, sharp edges (the fins on the coils) and rotating devices such as the fans.
**All service and maintenance operations which require access to the inside of the unit while it is in operation must be performed by qualified and experienced personnel who are aware of the necessary precautions.**



**Before accessing the inside of the unit, disconnect it from the electrical power supply.**

In any case, all safety legislation of the installation location must be followed.

**In the event of fire** water and other conductive substances must not be used to put out the fire near live electrical components. This warning must be displayed on notices in the unit installation location.

If the refrigerants used come into contact with fire they decompose, forming acids and other irritants. The smell of these substances, **even at concentrations below danger levels,** gives enough warning to allow evacuation of the area at risk.



**Make sure that the mains supply to the unit is the same as that shown on the rating plate.**

**Drain all water from the system before the winter season to avoid freezing.**
In periods in which the temperature may fall below 0°C, empty the unit in order to prevent the serious damage caused by the formation of ice.
This precaution is not necessary if the unit is charged with an appropriate anti-freeze mixture.

**Free cooling chillers must be loaded with anti-freeze.**
If the unit is fitted with the *optional* heating cable, it must be turned off without cutting the electrical power supply.

**Install a mechanical filter in the section of tubing near the intake of the unit** to prevent the fouling of the heat exchanger with pieces of welding or flakes of oxidised metal from the water mains.

"In compliance with Community directive 94/9/CE these units are not to be used in potentially explosive environments".

## SYMBOLS USED

| SYMBOL | MEANING | SYMBOL | MEANING |
|---|---|---|---|
|  | DANGER |  | MOVING COMPONENTS |
|  | IMPORTANT WARNING |  | HOT SURFACES – DANGER OF BURNING |
|  | HIGH VOLTAGE – ELECTRICAL RISK |  | SHARP EDGES |

## SAFETY

The new range of AQUAFLAIR water chillers and heat pumps features state-of-the-art technology to give maximum reliability, safety, quietness of operation and respect for the environment.

**1)** **RELIABILITY:** Trouble-free operation of Uniflair precision chillers is ensured by rigorous production process controls under ISO 9001-certified quality procedures:

- quality control of components;
- pressure testing of refrigerant and water circuits;
- testing of current absorption and IEC safety testing;
- calibration and testing of instruments and safety devices;
- final testing of unit under operating conditions

**2)** **ACTIVE SAFETY:** UNIFLAIR safety and control systems have a supervision and prevention function with:

- automatic blocking of components in dangerous conditions;
- indication of function status; reading and continuous display of circulating fluid temperature;
- management of compressor start-ups to reduce excessive switching on and off
- compressor start timing to reduce total unit start-up current
- indication of anomalous function conditions and/or alarms.

**3)** **PASSIVE SAFETY:** The essential functions of UNIFLAIR chillers are protected against anomalous function conditions and potential damage with:

- high and low pressostats on the refrigerant circuit (HP with manual re-set)
- safety valve on the high pressure refrigerant line
- anti-freeze protection to prevent freezing of the evaporator, pump and tank
- compressor motor electrical protection
- water circuit safety (with optional pump group)
- compressor crankcase heater (standard on free-cooling and heat pump versions).

**4)** **PERSONAL SAFETY.** The design and cabling of all UNIFLAIR chillers conforms to IEC electro-technical norms. Electrical panels have auxiliary 24V circuits and are equipped with:

- general switch and door lock switch;
- automatic circuit-breaker switches;
- double protection panel on fan compartment.

The fans inlet end outlet are protected by an external metal grille which conforms to applicable safety norms.

# DESCRIZIONE GENERALE

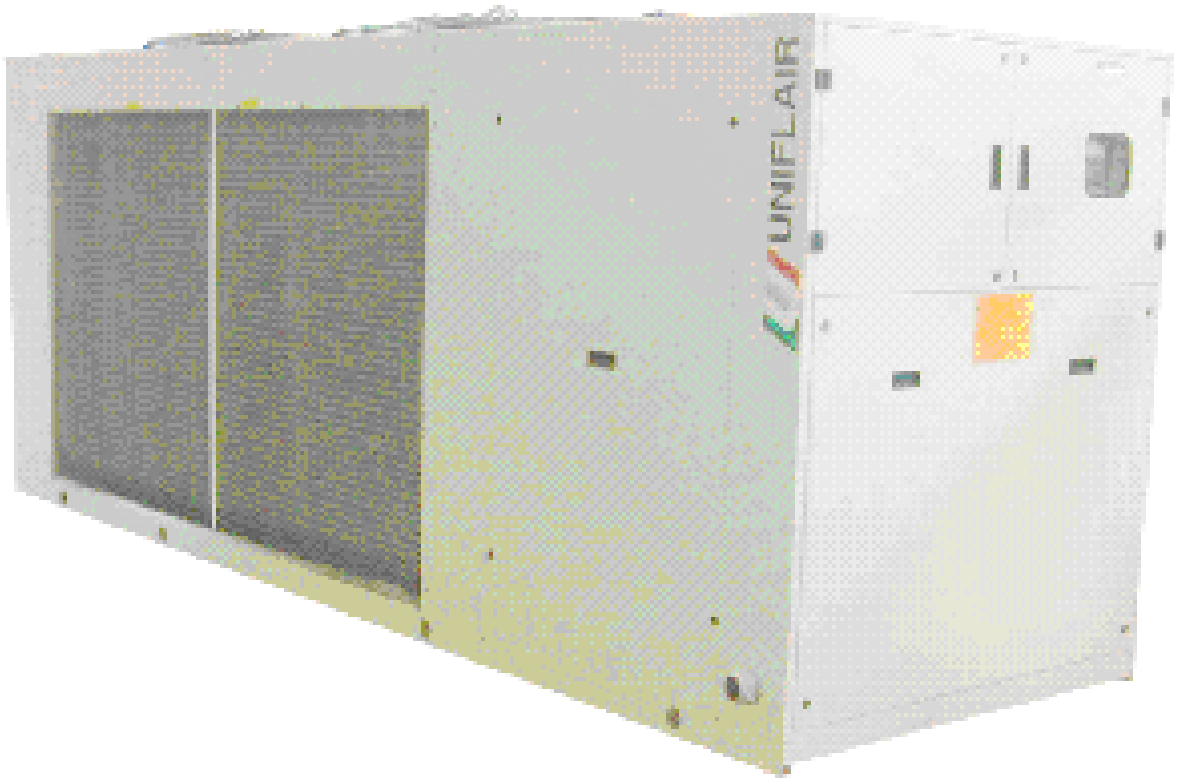


## DOCUMENTATION INCLUDED WITH THE UNIT

Every **AQUAFLAIR** chiller is delivered complete with the following documentation:

- ARA and microprocessor control instruction manuals
- Unit installation diagrams
- Diagrams of the refrigerant and hydraulic circuits of the unit
- Electrical diagrams
- List of spare parts
- CE declaration with list of European directives and norms to which the unit conforms
- Guarantee Conditions.

# AVAILABLE VERSION AND ACCESSORIES

***ARAC***
- *Basic version with **star / triangle** electronic switch*
- *Basic version with **modulating condensation control***
- ***Low noise version (*)**, (with modulating control)*
- *Version for the production of hot water at low temperatures **(up to –10°C)***
- *Version for the production of hot water at low temperatures **(up to –10°C) – LOW NOISE (*)***

***ARAH***
- *Basic version with **star / triangle** electronic switch*
- *Basic version with **modulating condensation control***
- ***Low noise version (*)**, (with modulating control)*

***ARAF***
- *Version with **modulating condensation control***
- ***Low noise version (*)**, (with modulating control)*

***(*)** enabled by automatic speed regulation of fans and soundproofing of compressor housing*

*New series can be equipped with:*
- ***partial heat recovery (heat plate exchangers) (ARAC, ARAH e ARAF)***
- ***total heat recovery (shall-and-tube heat exchangers) (ARAC, ARAH e ARAF)***

*Pump group: **Standard 1** pump (from 2,1 to 2,9 kW)*
*Pump group: **Standard 2** pumps (from 2,1 to 2,9 kW)*
*Pump group: **1** pump **high head pressure***
*(from 2,7 to 3,6 kW)*
*Pump group: **2** pumps **high head pressure***
*(from 2,7 to 3,6 kW)*
*Primary circulation **1** pump group.*

*Two reservoir tanks available:*
- *Tank capacity **500 litres***

  *Models 0574A – 0644A – 0744A – 0964A*
- *Tank capacity **650 litres***

  *Models 1084A – 1204A*

- *Water flow differential pressure switch **(standard)***
- ***Hydronic connections provided on the unit (std. with pump group and ARAF series)***
- *Double shut off valve on pumps*

- ***R407C***
- ***R22 (**)***
- ***R134a** (on request)*

***(**)** For Countries belonging to the European Union, in accordance with European Council standards CE 2037/00, all ARAC and ARAF models are equipped with refrigerant model R407C.*
*For heat pumps (ARAH ) the use of R22 refrigerant is permitted until the 31st of December 2003.*

- *Crankcase heaters (**Standard on versions equipped with modulating control of condensation pressure - ARAH and ARAF**)*
- *High and Low refrigerant pressure gauges*
- *Low pressure transducer (**Standard on ARAH**)*
- *High pressure transducer (**Standard on all version**)*
- *Shut off valve on compressors (suction and discharge)*

## OPTIONS

| | |
|---|---|
| | ***ALL** models are equipped with new advanced **UPC1m control**, available with Local user terminal.*<br><br>***LAN card installed** for connection units to a local user network .*<br><br>*Local user terminal **(mP20II)***<br>*Remote user terminal **(mP20II)*** |
| | • *RS485 serial output*<br>• *Return temperature control*<br>• *Clock card* |
| | • *Power phase correction capacitors (compressors and fans)*<br>• *Temperature control on electrical board **(Standard on versions equipped with modulating condensation control and on ARAH / ARAF series)*** |
| | *Options for ARAC and ARAH models:*<br>• *Evaporator*<br>• *Evaporator and pump group*<br>• *Evaporator and reservoir tank*<br>• *Evaporator, reservoir tank and pump group* |
| | • *Condensing coils cataforesis treatment*<br>• *Condensing coils equipped with metallic protection filters (Standard on ARAF)*<br>• *Rubber anti-vibration kit*<br>• *Spring anti-vibration kit*<br>• *Lifting kitt* |

## DATA PLATE

The chiller data plate is in the electrical panel and gives the following information:

- Model of the unit
- Serial number
- Voltage, number of phases and power supply frequency for primary and auxiliary circuits
- Current and power absorbed
- OA (Operating current), FLA (Full load current) and LRA ( Locked rotor current )
- Safety device settings
- Refrigerant type and charge in kg for each circuit.

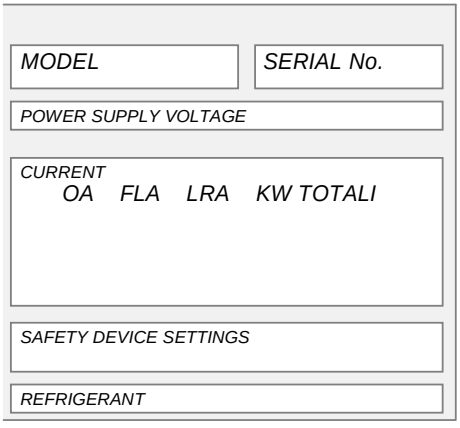

## GENERAL DESCRIPTION AND INTENDED USE

Air-cooled and water-cooled **AQUAFLAIR** air-cooled liquid chillers and heat pumps are designed for outdoor installation in comfort and industrial applications. The chilled water produced can be sent to fan coils or room air conditioning units or can be used for industrial process cooling.

Units fitted with the UPC1m microprocessor control can be connected in parallel on a single water circuit thanks to the possibility to connect the microprocessor control boards in a local network. The cooling capacity of the sys.tem can therefore be altered at any time.

## FUNCTION LIMITS AIR AND WATER TEMPERATURE (*)

### AIR AND WATER TEMPERATURE (*)

| ARAC | VERSION | | |
|---|---|---|---|
| | BASIC | MODULATING CONDENSATION CONTROL | LOW NOISE |
| $T_{Ambient}$ | | | |
| Minimum | 15°C | -20°C | -20°C |
| Maximum | 45°C | 45°C | 40°C |
| $T_{Outlet\ Water}$ | | | |
| Minimum | 3°C | 3°C (-10°C *see Note 1*) | 3°C (-10°C *see Note 1*) |
| Maximum | 20°C | 20°C | 20°C |

| ARAH | VERSION | | |
|---|---|---|---|
| | BASIC | MODULATING CONDENSATION CONTROL | LOW NOISE |
| $T_{ambiente}$ | | | |
| Minima | -10°C (4) | -10°C (4) | -10°C (4) |
| Massima | 20°C | 30°C (5) | 30°C (5) |
| $T_{Acqua\ Uscita}$ | | | |
| Minima | 35°C | 35°C | 35°C |
| Massima | 55°C | 55°C | 55°C |

| ARAF | VERSION | |
|---|---|---|
| | MODULATING CONDENSATION CONTROL | LOW NOISE |
| $T_{Ambient}$ | | |
| Minimum | -20°C | -20°C |
| Maximum | 40°C | 40°C |
| $T_{Outlet\ Water}$ | | |
| Minimum | 3°C | 3°C |
| | 20°C | 20°C |

**(*)** Con portata aria nominale; temperatura acqua in uscita 7°C; pieno carico; refrigerante R407C.
***(*)*** *Nominal air flow; outlet water temperature: 7°C; full load; Refrigerant R407C.*

***Note 1:***
***Fluids (water and glycol)*** *IN UNITS DESIGNED FOR THE PRODUCTION OF WATER AT LOW TEMPERATURES****, can be cooled to*** *–10°C.*

***Note 2:***
*Pump seals are designed to guarantee water temperatures that are no lower than –10°C.*

*Pump motors fitted on standard units permit operation with a maximum percentage of **30%** glycol.*
*The below table indicates the percentage of ethylene glycol required by volume, as a function of the chilled fluid output temperature.*

***Note 3:***
*Correct functioning of the microprocessor board and user terminal is guaranteed for temperatures between: **-10°C** ÷ **+65°C** (units complete with modulating condensation control are fitted with an electrical board temperature control system).*
***Note 4***
*Possible with outlet water temperature not exceeding 40°C.*

***Note 5:***
*Possible with outlet water temperature not exceeding 50°C.*

| |
|---|
| ***Rated power supply tolerance: 400V +/- 10%*** |
| ***Maximum working pressure of hydraulic circuit: 6 barg*** |
| ***Storage conditions:** in the range **– 20°C to + 45°C** for all models* |

## EASE OF INSTALLATION AND MAINTENANCE

The compact dimensions and reduced weight of these chillers facilitates installation even where space is limited. All models are fitted with a main switch to enable direct connection to the mains power supply without the need for an external switch; short-circuit protection fuses should be fitted however.
All units are assembled and fully tested in the factory, making installation simply a question of connection to the electrical power supply and water circuits. An important feature of the design is the positioning of components to allow easy access for service and maintenance.

## RESISTANCE TO THE ELEMENTS

Uniflair chillers boast excellent corrosion resistance and are built to withstand the harshest of conditions. The structure is in galvanised steel sheet painter with polyester powder; all external fastenings are in stainless steel.

# ACCESSING MAIN COMPONENTS

**COMPRESSOR HOUSING**

To access the compressor housing, remove the fixing of ¼ turn and lift panel using the two front handles. Removing panel gives access to the compressor housing, the microprocessor control user terminal and to the optional high and low pressure manometers..

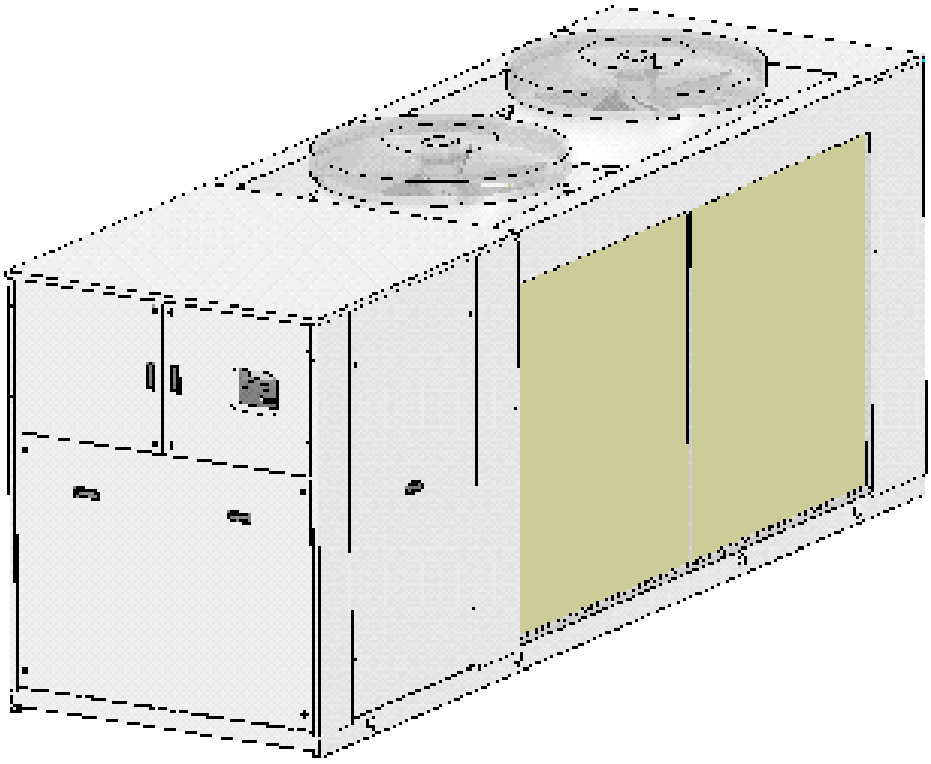



***DANGER – HOT SURFACES! RISK OF BURNING.*** *When panel has been removed the compressor and refrigerant tubes are exposed – during normal unit operation these components are very hot and can cause burns.*



***IMPORTANT:*** *Removing panel does not stop the unit and the power supply to the compressors is not interrupted. For service and maintenance, the main switch IG must be turned off (position 'O').*

## ELECTRICAL PANEL

To access the electrical panel move the main switch IG to position “O” and turn the two screws 1/4 turn. This enables panel, hinged at the base of the electrical panel to be opened.

## PUMP GROUP

To access the optional pump group and the free cooling pump remove the four fixing ¼ turn screws and remove panel using front handle. To avoid contact with the fan blades there is a further steel protection panel, fixed with screws.

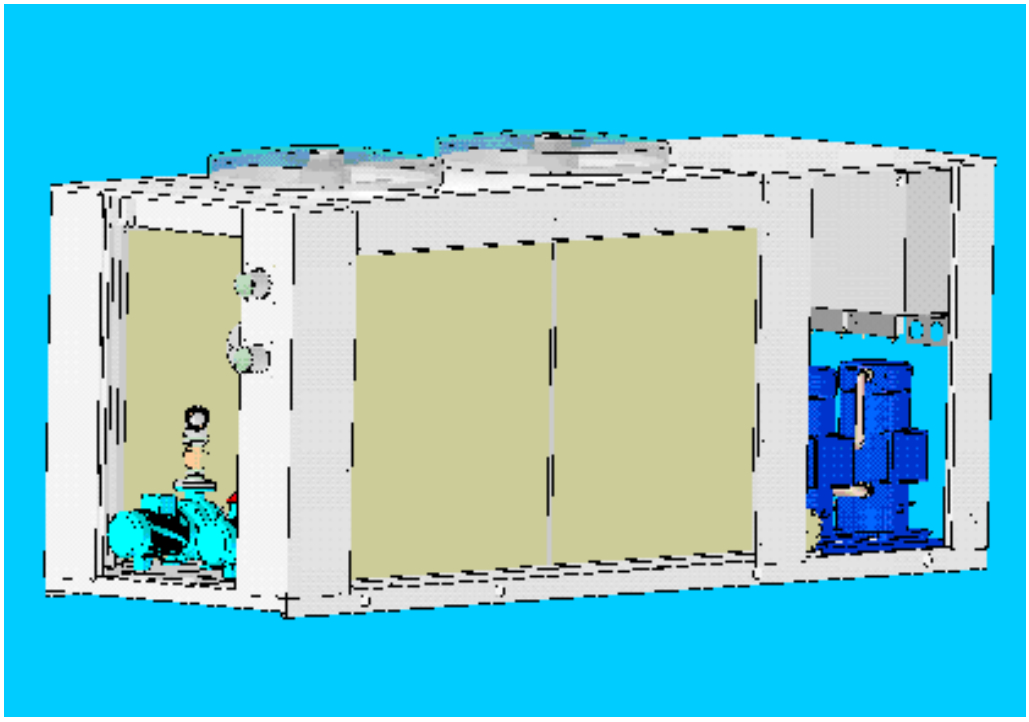

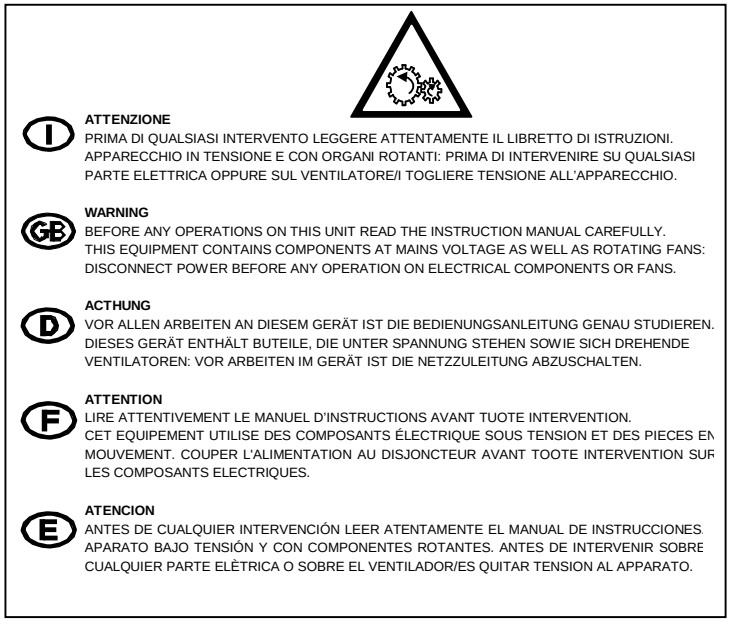

**(I) ATTENZIONE**
PRIMA DI QUALSIASI INTERVENTO LEGGERE ATTENTAMENTE IL LIBRETTO DI ISTRUZIONI.
APPARECCHIO IN TENSIONE E CON ORGANI ROTANTI: PRIMA DI INTERVENIRE SU QUALSIASI PARTE ELETTRICA OPPURE SUL VENTILATORE/I TOGLIERE TENSIONE ALL'APPARECCHIO.

**(GB) WARNING**
BEFORE ANY OPERATIONS ON THIS UNIT READ THE INSTRUCTION MANUAL CAREFULLY.
THIS EQUIPMENT CONTAINS COMPONENTS AT MAINS VOLTAGE AS WELL AS ROTATING FANS: DISCONNECT POWER BEFORE ANY OPERATION ON ELECTRICAL COMPONENTS OR FANS.

**(D) ACTHUNG**
VOR ALLEN ARBEITEN AN DIESEM GERÄT IST DIE BEDIENUNGSANLEITUNG GENAU STUDIEREN.
DIESES GERÄT ENTHÄLT BUTEILE, DIE UNTER SPANNUNG STEHEN SOWIE SICH DREHENDE VENTILATOREN: VOR ARBEITEN IM GERÄT IST DIE NETZZULEITUNG ABZUSCHALTEN.

**(F) ATTENTION**
LIRE ATTENTIVEMENT LE MANUEL D'INSTRUCTIONS AVANT TUOTE INTERVENTION.
CET EQUIPEMENT UTILISE DES COMPOSANTS ÉLECTRIQUE SOUS TENSION ET DES PIECES EN MOUVEMENT. COUPER L'ALIMENTATION AU DISJONCTEUR AVANT TOOTE INTERVENTION SUR LES COMPOSANTS ELECTRIQUES.

**(E) ATENCION**
ANTES DE CUALQUIER INTERVENCIÓN LEER ATENTAMENTE EL MANUAL DE INSTRUCCIONES.
APARATO BAJO TENSIÓN Y CON COMPONENTES ROTANTES. ANTES DE INTERVENIR SOBRE CUALQUIER PARTE ELÈTRICA O SOBRE EL VENTILADOR/ES QUITAR TENSION AL APPARATO.

***IMPORTANT:*** *Before removing panel switch off the unit by moving main switch IG to position 'O' to make sure that there is no power supply to the compressors and circulation pumps.*

## DESCRIPTION OF MAIN COMPONENTS

### STRUCTURE

These units are normally installed outdoors, often on the roof of a building. For this reason the structure of the unit is made entirely in galvanised steel, painted with corrosion-resistant polyester powder. All external fastenings are in stainless steel.
The panels can be easily removed to facilitate maintenance and all internal components can be accessed via two sides of the unit.

### COMPRESSORS

Ultra-reliable rotating SCROLL compressors from a leading manufacturer are used (in tandem ). All AQUAFLAIR units have two independent refrigerant circuits, ensuring at least 50% capacity in the unlikely event of a fault in one of the circuits.
The microprocessor control manages the switching on and off of the compressors in order to ensure effective control of unit capacity; capacity steps depend on the type of control fitted; in the case of the mP20II control the steps are:

**0 - 25 - 50 - 75 - 100%  for all models**

In order to prevent the refrigerant fluid diluting the oil and creating foam when the unit is started all free cooling or heat pump AQUAFLAIR models are fitted with oil heaters which switch on automatically when the compressor stops.
Each compressor is fitted on rubber mountings to reduce vibration transmission.

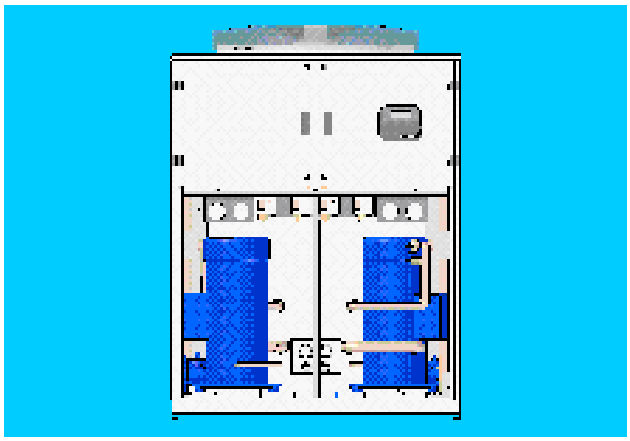

## FANS

The sickle-blade axial fans are directly connected to external rotor motors which can be fitted with voltage modulation speed control. The metal support grille conforms to all the main safety standards. The motors have class F insulation and IP54 protection under DIN VDE 0470 section 1/11.92 and EN 60529. Modulating condensation temperature control is available with fan speed regulation. This control is standard with certain unit configurations (ultra low-noise versions, free cooling versions, partial heat recovery).

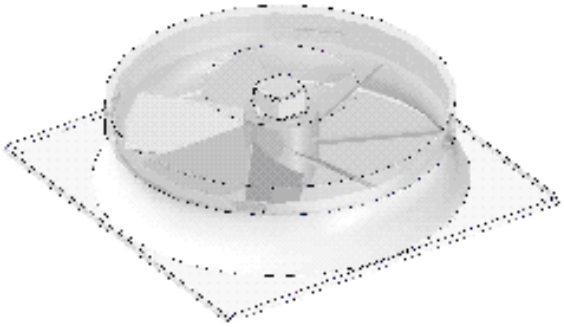

## ELECTRIC PANEL

The panel is built to conform to directive 73/23/EEC and to its relevant standards. The panel has a master door-locking disconnecting switch and is housed in an appropriate compartment protected by a panel fastened with ¼ turn screws (the latter panel can be reached by opening the two outside leaves providing access to the unit's local user terminal).
Internal ventilation is through an outside air intake. In versions equipped with modulating condensation control, a temperature control system for the electric panel is also provided. Control is by a
self-adjusting, anti-condensation electrical resistor.

Main features:

- phase sequence relay
- power supply: 400+/-10% v/3ph/50hz
- in IP54 protection class;
- 24V auxiliary circuit ;
- every compressor is protected against overload and short-circuit by an automatic **thermomagnetic circuit breaker**;
- fans protected against overload and short circuit by an automatic **thermomagnetic circuit breaker**;
- pumps protected against overload and short-circuit by a motor overload cutout ;
- contactors provided for compressors and pumps;
- 2 voltage-free contacts for remote signalling of addressable alarms.

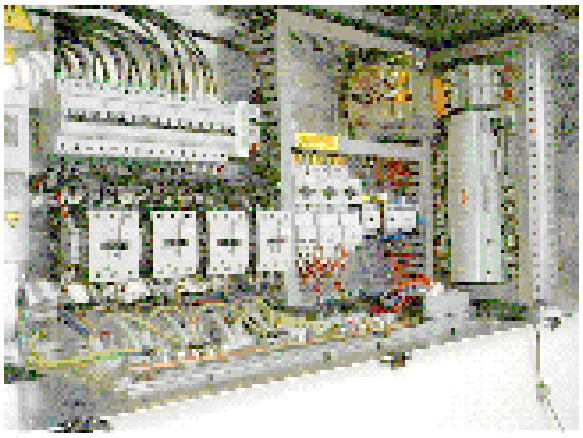

## CONDENSERS

New AQUAFLAIR models, with cooling capacity over 118 kW are air-cooled; the condenser consists of coils with aluminium fins (**pitch: 1,8 mm**) and copper tubes mechanically expanded to obtain an optimum metallic contact and maximum exchange efficiency.
The aluminium tube shoulders eliminate the risk of pipes breaking with vibrations or thermal dilation.
If there are harsh conditions in the installation environment, various treatments are available for the exchanger: **pre-painted aluminium**, **copper-copper** protection and **cataforesis aluminium treatment**, which provides the best compromise between cost and performance (all on request).
The coil has a large surface area for operation even with high external temperatures.

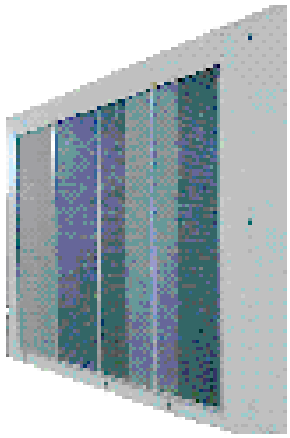

## EVAPORATOR

The shell and tube exchanger has two cooling circuits and a single water circuit which operates with a very low pressure drop.
The exchanger is completely covered in closed-cell expanded polyurethane **to prevent the formation of condensation** and **reduce thermal dispersion**



## CHILLED WATER PUMP GROUP (optional)

The pump group for the circulation of chilled water is available in different configurations:

- one pump version;
- two pumps (one in stand-by) version;
- one pump plus reservoir tank version;
- two pumps (one in stand-by) plus reservoir tank version.
- primary / secondary circulation.

The pumps, with 2-pole motors (2900 rpm), are fitted with the related connections, collectors and electrical panel (located in the main electrical panel housing). The pump panel controls rotation of operation between the two pumps on the basis of run time or alarms. The electrical panel contains the run hour counter for each pump and red LED alarm indicators.
Pump body, flange and impeller are AISI 304 stainless steel, insulation is class F and protection is to IP55. The materials used ensure correct pump operation with liquid temperatures from -10°C to +85°C.

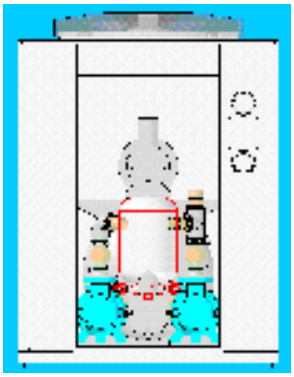

| ARAC – ARAH - ARAF | | 0574A | 0644A | 0744A | 0964A | 1084A | 1204A |
|---|---|---|---|---|---|---|---|
| Standard Pump | Available head pressure (kPa) | 190 | 230 | 200 | 140 | 140 | 130 |
| | Adsorbed power (kW) | 2,1 | 2,7 | 3 | 2,5 | 2,7 | 2,9 |
| High pressure pump | Available head pressure (kPa) | 260 | 310 | 290 | 310 | 300 | 300 |
| | Adsorbed power (kW) | 2,7 | 3,5 | 3,7 | 3,3 | 3,5 | 3,6 |

## RESEVOIR TANKS

*Two reservoir tanks available:*

- *Tank capacity **500 litres***

  *Models 0574A – 0644A – 0744A – 0964A*

- *Tank capacity **650 litres***

  *Models 1084A – 1204A*

## ANTIVIBRATION FEET

To cut down vibrations, AQUAFLAIR units can be supplied with antivibration supports.

Uniflair has selected sprlng supports for its units( screen 4).

They comprise **four springs**. These supports allow considerable yielding while being highly compact. As a result, they are particularly efficient in insulating low frequencies, typical of machines, such as refrigerantors, running al low revs.

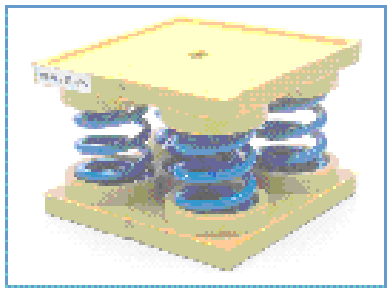

Screen 4

Moreover, the construction design rules out any problems of use in particularly difficult and/or aggressive places, as the supports are highly resistant to oils, corrosion and high temperat ures.

Specifications:

- the springs are in elastomer with metal insert;
- the bases are in metal coated with elastomer (Lexan with stud).

# DIMENSIONS AND WEIGHTS

AQUAFLAIR chillers are designed in 3 versions( frame 1: two fans; frame 2 : three fans ; frame 3 : four fans) .
The weight of the unit depends on the pump group configuration, the reservoir tank and other fitted accessories.

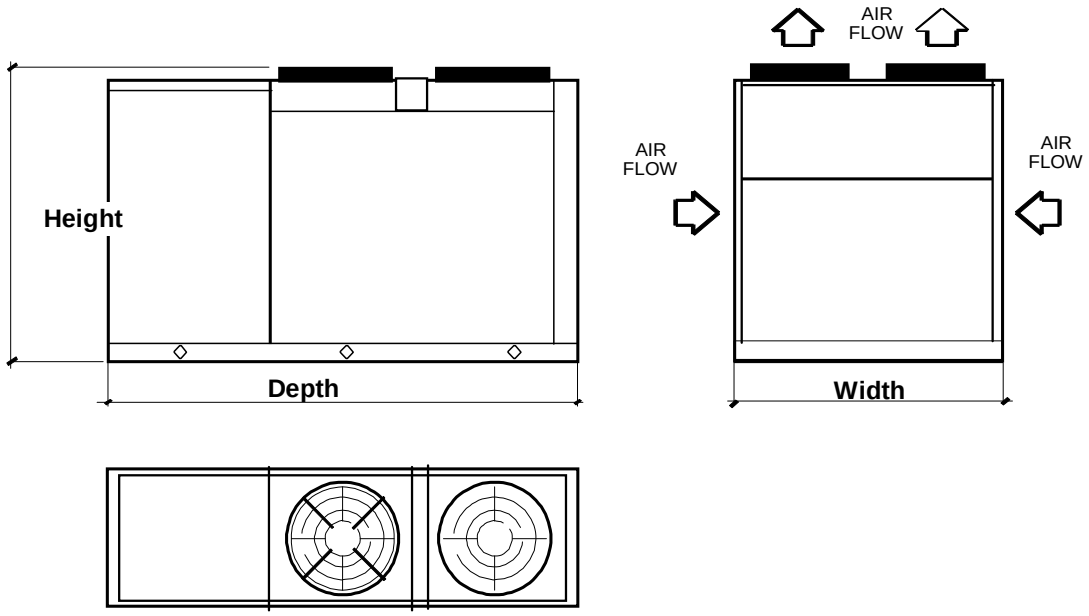


| MODELS ARAC – ARAH | | 0574A | 0644A | 0744A | 0964A | 1084A | 1204A |
|---|---|---|---|---|---|---|---|
| Height | mm | 1618 | 1618 | 2140 | 2140 | 2140 | 2140 |
| Depth | mm | 3807 | 3807 | 4542 | 4542 | 5242 | 5242 |
| Width | mm | 1193 | 1193 | 1344 | 1344 | 1344 | 1344 |
| Footprint | $m^2$ | 4,5 | 4,5 | 6,1 | 6,1 | 7,0 | 7,0 |
| Weight (standard version, without hydraulic kit, pump group or water tank) (1) | kg | 1237 | 1271 | 1754 | 2001 | 2182 | 2290 |
| Weight (version with hydraulic kit, water tank and 2 pumps)(1) | kg | 1519 | 1554 | 2058 | 2321 | 2537 | 2648 |
| **MODELS ARAF** | | **0574A** | **0644A** | **0744A** | **0964A** | **1084A** | **1204A** |
| Height | mm | 1618 | 1618 | 2140 | 2140 | 2140 | 2140 |
| Depth | mm | 3807 | 3807 | 4542 | 4542 | 5242 | 5242 |
| Width | mm | 1193 | 1193 | 1344 | 1344 | 1344 | 1344 |
| Footprint | $m^2$ | 4,5 | 4,5 | 6,1 | 6,1 | 7,0 | 7,0 |
| Weight (version with free-cooling pump, without water tank and pump group)(1) | kg | 1417 | 1451 | 2164 | 2411 | 2682 | 2790 |
| Weight (version with free-cooling pump, water tank and 2 pumps)(1) | kg | 1699 | 1734 | 2468 | 2731 | 3037 | 3148 |

***(1)*** *Data refers to units with an empty hydraulic circuit*

## *Partial Heat Recovery*

*Heat recovery is through heat recovery plate exchangers fitted before the condensers. The below drawing indicates the partial heat recovery circuit fitted inside the unit, recommended circuit for user.*
*In order to ensure the correct functioning of the chillers avoid that the heat recovery plate exchanger **D** is powered by water which is too cold (>35°C). For this reason use of a three way valve **VM** is strongly advised yet remains the responsibility of the installer (see diagram).*

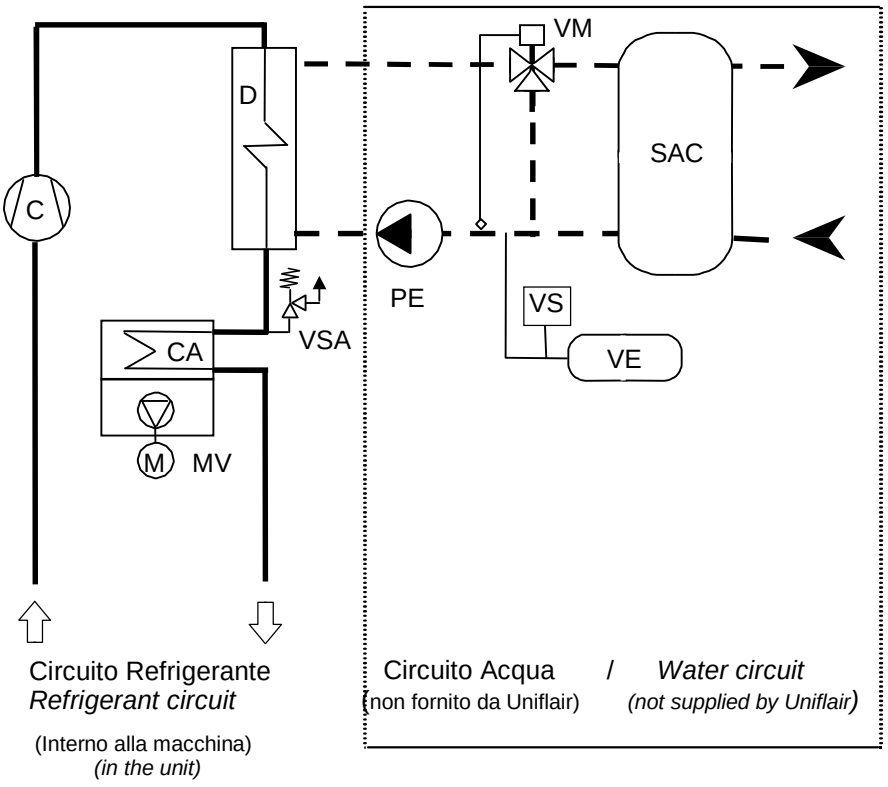


| | |
|---|---|
| **VM** | *Motorized 3-way valve* |
| **VS** | *Water safety valve* |
| **VE** | *Expansion tank* |
| **PE** | *Circulation pump* |
| **SAC** | *Water tank* |
| **MV** | Fans |
| **CA** | *Condensator finned coils* |
| **C** | *Compressor* |
| **D** | *Heat plate exchancer* |
| **VSA** | *Safety valve* |

## *Total Heat Recovery*

In the **AQUAFLAIR** series, total heat recovery is achieved by means of two independent parallel circuits, each of which consists of a shell and tube heat exchanger. This option means heat that would otherwise be released outside by the condenser is used to produce hot water, typically for domestic use.

**COOLING ONLY SERIES**

In the cold-only series (**ARAC**), total heat recovery is achieved based on two parallel circuits, each illustrated in the following diagram: if you wish to produce hot water, the four-way valve (**B**) diverts refrigerant through the recovery unit (**E**) - where condensation heat is released - instead of through the condenser (**D**).

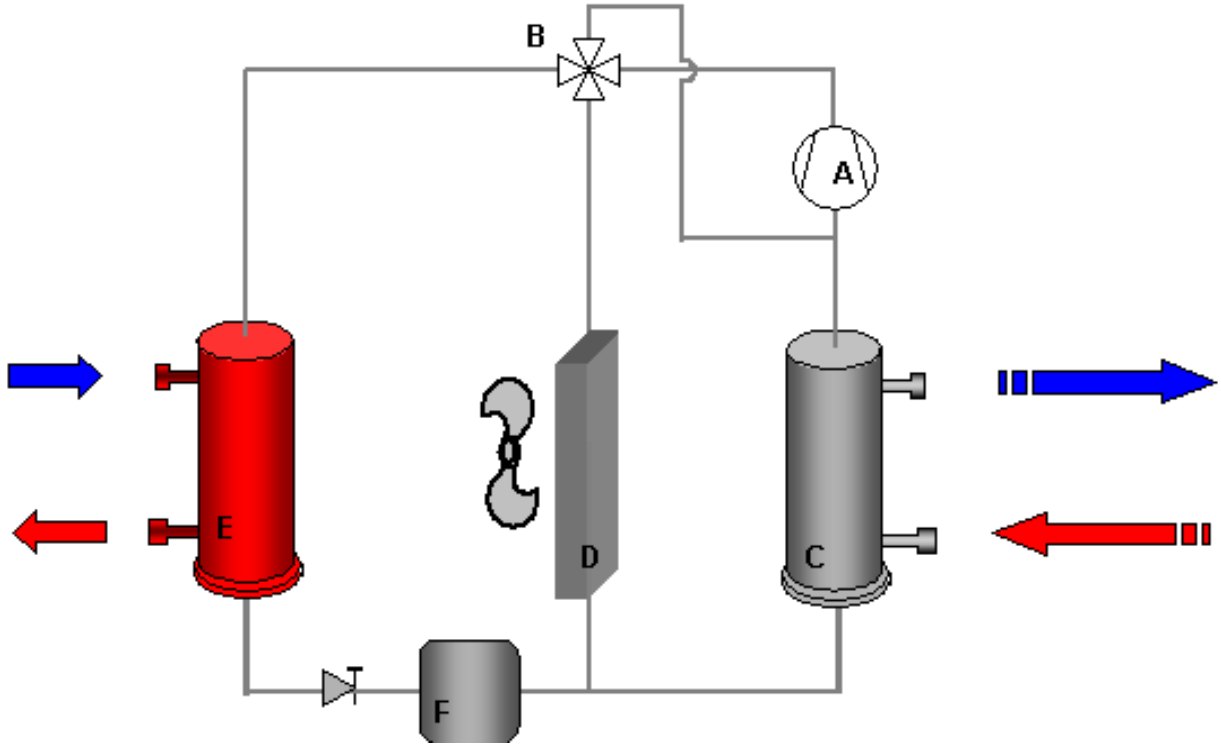


*Legend:*

*A. Compressor*
*B. 4-way valve*
*C. Evaporator*
*D. Condenser*
*E. Recovery exchanger*
*F. Liquid receiver*

## HEAT PUMP SERIES

In the heat pump series (**ARAH**), total condensation heat recovery is achieved based on a procedure closely resembling the one adopted by the cold-only series (dual circuit, one of which is represented in schematic form below).
Nonetheless, the heat pumps, teamed with the total recovery option, feature greater flexibility: indeed, **four operating conditions** can be achieved:

1. Production of chilled water and production of hot water for domestic use;
2. Production of chilled water only;
3. Production of hot water only for domestic use;
4. Production of water for heating purposes only.

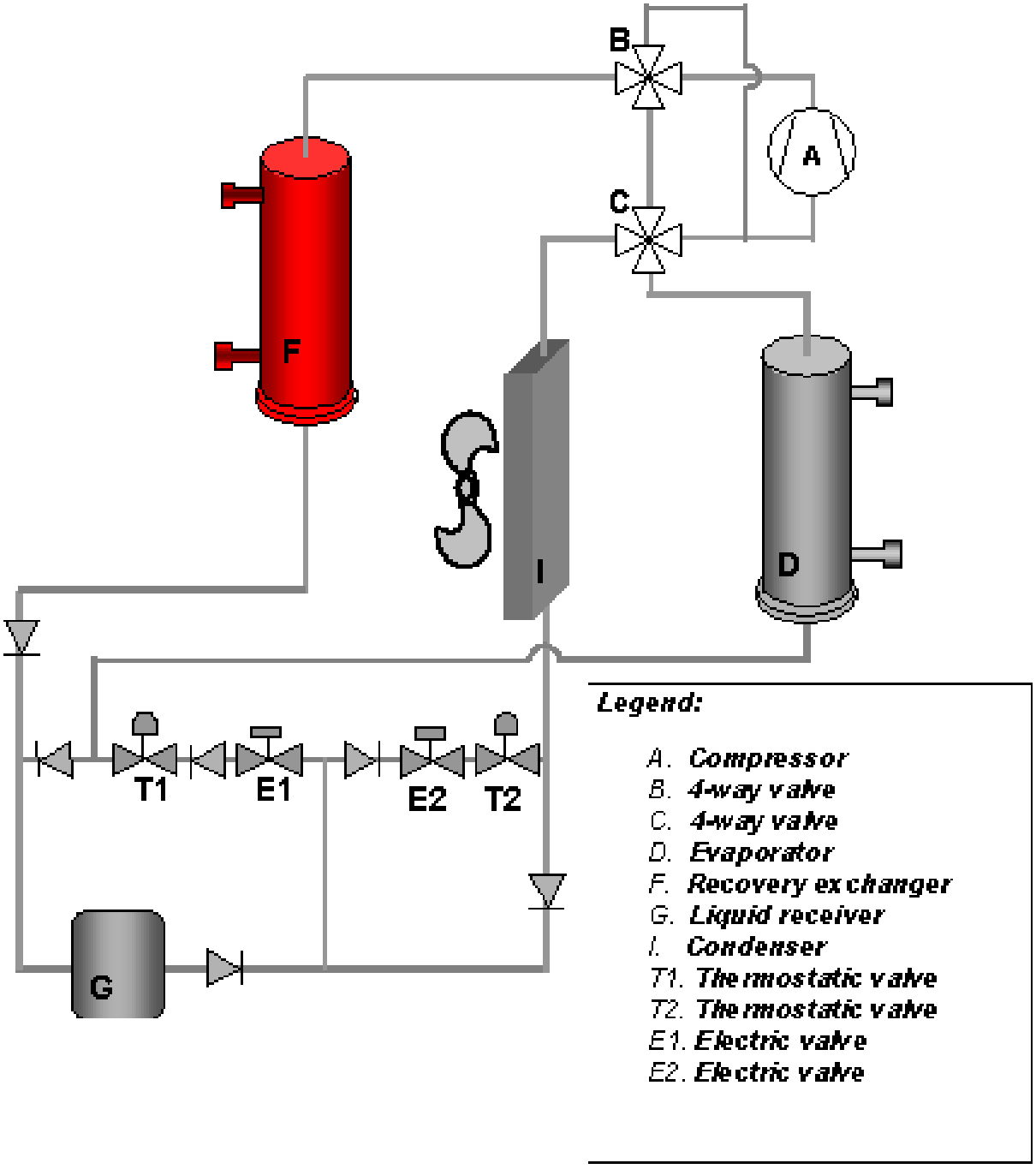

## OPERATION MODE

### HEAT PUMP - SUMMER MODE
### Production of chilled water and hot water for domestic use

When wanting to produce both **chilled water and hot water for domestic use**, heat due to be released to the condenser is instead used by the recovery unit: the valve (**B**) diverts refrigerant through the recovery unit (**F**), bypassing the condenser. As a result, free hot water is produced along with high COP ratings since the fans stay off.

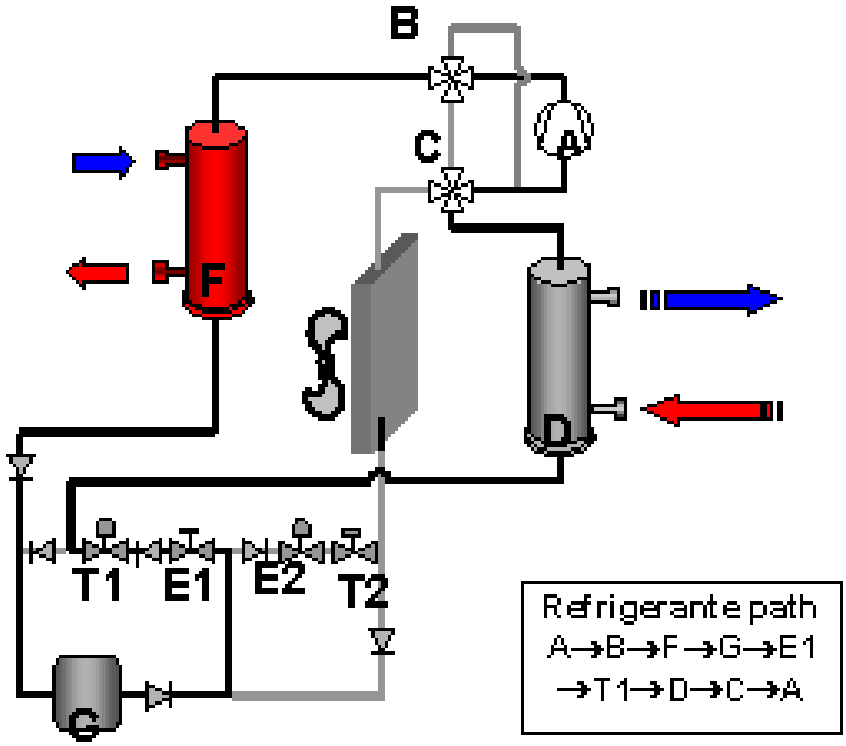


**HEAT PUMP - SUMMER MODE**
**Production of chilled water only**

If there is no need for domestic water, the unit is used to produce **chilled water** only, releasing condensation heat to the condenser (**I**).

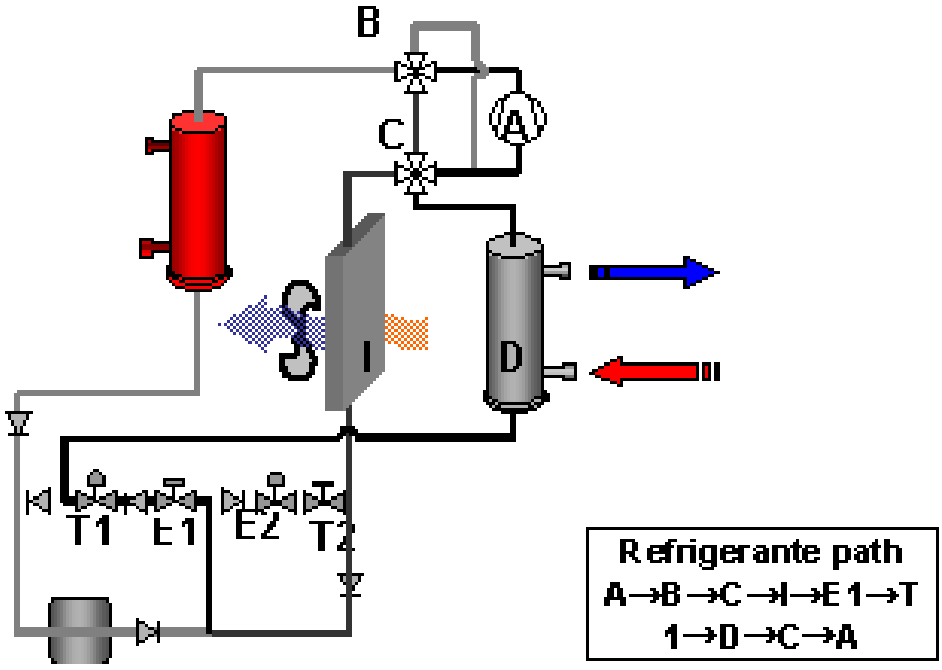

**HEAT PUMP - INTERMEDIATE SEASON**
**Production of domestic water only**

When there is no need for chilled water, and only **water for domestic use** is required, the unit uses the recovery unit (**F**) to condense the refrigerant.

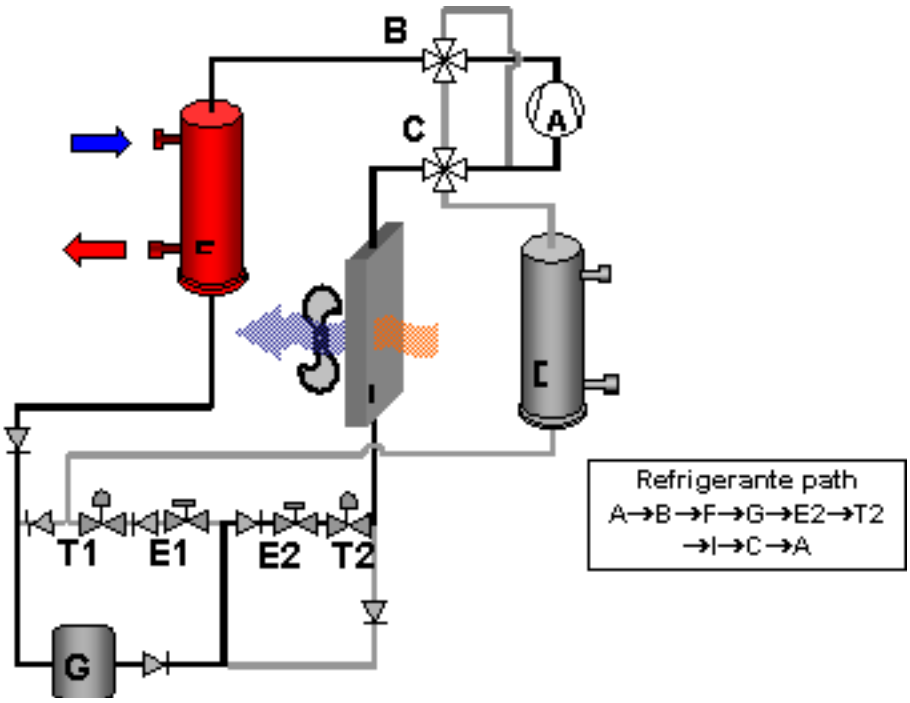


***HEAT PUMP - WINTER MONTHS***
***Production of hot water for heating purposes***

*During the winter months, the unit produces water for heating purposes, like a boiler, using (**D**) to condense and (**I**) to evaporate.*
*Hence the recovery unit is left idle and drained fully through the four-way valve (**B**).*

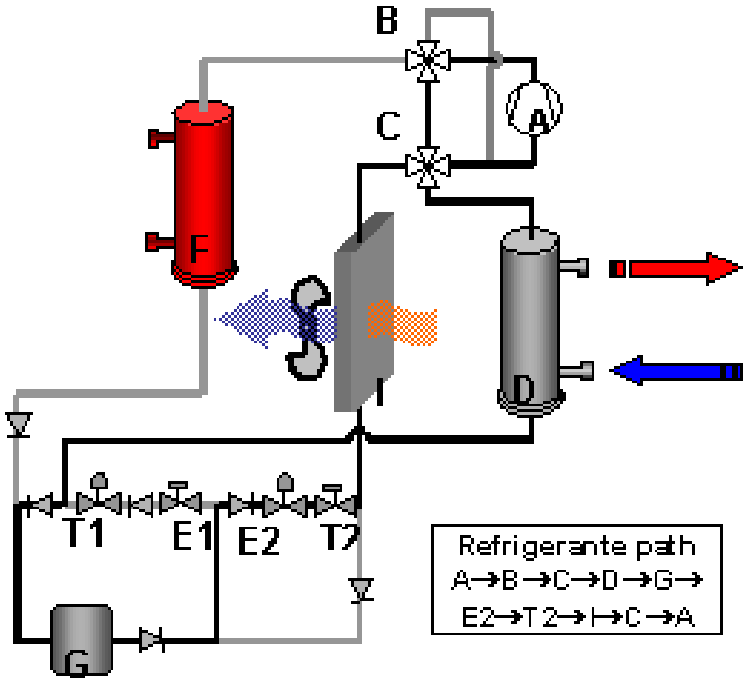

## FREE-COOLING SERIES

*When the chiller is used for the cooling of technological systems which operate in all seasons, new **ARAF** chillers series have free-cooling function that can significantly reduce energy consumption.*

*In chillers belonging to said series, free-cooling system is implemented. Using this system, when external temperature is sufficiently low, there is no need to use the "cooling" part of the chiller, namely the compressors, which are the components responsible for most energy consumption.*
*In these units, chilled water is actually produced using external air, meaning the only energy required is that demanded by the fans.*

***With this method, chilled water can be provided at no cost.***

***AQUAFLAIR** units, like all other Uniflair products, give you the option of using free cooling even when external temperature is not sufficient to ensure that heat is removed altogether.*
*In these cases, the resulting operating mode is called mixed: the chiller will use external air to pre-cool the refrigerant, subjecting compressors to less strenuous duty, again achieving energy savings.*
*Hence there will be three operating conditions, represented in schematic form in the diagram below:*

*Hence there will be three operating conditions, represented in schematic form in the diagram below:*

- ***Free cooling** (fans and freecooling pump operating);*
- ***Mixed** (fans and freecooling pump operating, and compressors operating in part);*
- ***Mechanical cooling (Direct expansion)** (fans and compressors operating).*

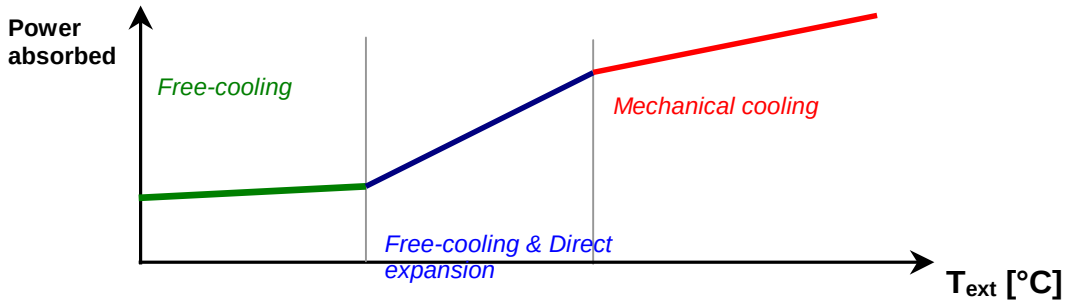

## THEORY OF OPERATION

*The idea behind the freecooling mode is, as mentioned above, that of producing chilled water using external air instead of direct expansion operation.*

*The microprocessor control system, when external air temperature is sufficiently low, enables freecooling mode: water is circulated by the f.c. pump inside special heat exchange coils and cooled by external air forced in by fans, which, together with the pump, are the only components absorbing energy.*
*The water is then conveyed back into the circuit and supplied to the equipment.*

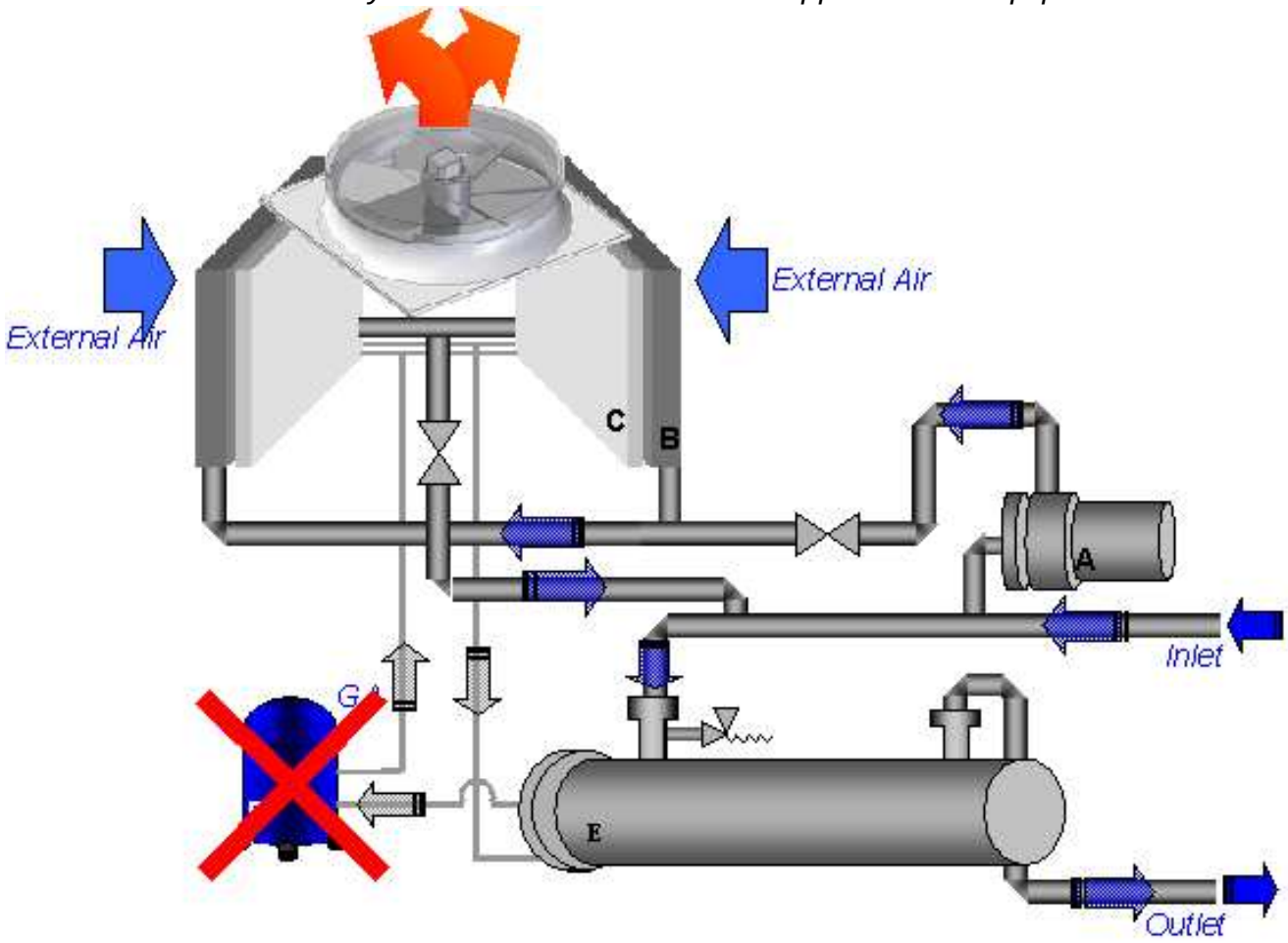


| | |
|---|---|
| **A.** Pompa di free cooling | ***A.*** *Free-Cooling pump* |
| **B.** Batteria di free cooling | ***B.*** *Free-Cooling coil* |
| **C.** Batterie condensanti | ***C.*** *Condenser coil* |
| **D.** Compressore Scroll | ***D.*** *Scroll compressor* |
| **E.** Evaporatore | ***E.*** *Evaporator* |

*Bear in mind that an installation's heat load - i.e. the amount of "cold" energy required - depends on both the heat generated inside it (hence machinery, people, lights…) and external temperature. Generally, therefore, the heat load in summer will be greater than in the winter months.*
*Based on this premise, we can reasonably assume that if the chilled water produced must have a temperature of approx. 7°C during the warmer months, during the colder months $T_{outlet\ water}$ = 10°C may be sufficient.*

***Based on these presuppositions, the unit can work <u>in full freecooling mode</u> with a $T_{external}$ as high as 5°C.***

*Nonetheless, there is a temperature range within which - even though production of water at 10°C cannot be assured with <u>freecooling mode alone</u> - it is still best to use the f.c. coils to pre-cool water returned from the equipment, hence making the cooling part "work" less, thus achieving energy savings.*

***The range in question varies depending on the model and load, though we can assume it will be from 5°C to 15°C.***

*To sum up, operating ranges for **ARAF** units can be split into:*

- ***Freecooling, with $T_{ext}$ < 5°C***
- ***Mixed, with 5°C < $T_{ext}$ < 12 to 15°C***
- ***Mechanical cooling (direct expansion) with $T_{ext}$ > 12 to 15°C***

*The above graph can be completed with these data:*

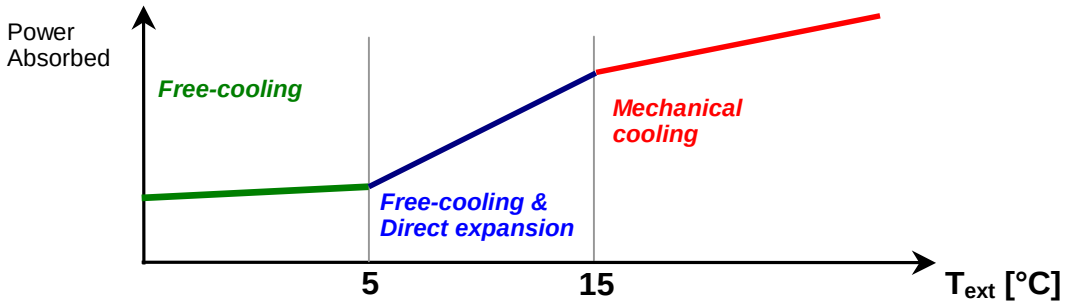

# INSTALLATION GUIDE

## TRANSPORT AND MOVEMENT

The symbols on the packaging conform to the ISO7000 standard and are explained below:

| SYMBOL | MEANING | SYMBOL | MEANING |
|---|---|---|---|
|  | FRAGILE: handle with care | 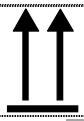 | THIS SIDE UP shows the orientation of the unit. |
|  | PROTECT AGAINST MOISTURE: the packaged unit must be stored in a dry place. | 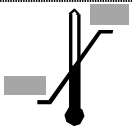 | TEMPERATURE LIMITS: the unit must not be stored outside these limits. |
|  | CENTRE OF GRAVITY: shows the centre of gravity of the packaged unit. |  | NO HOOKS: do not use hooks to lift the packed unit. |
| 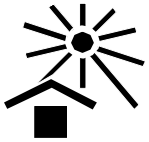 | KEEP AWAY FROM HEAT: the unit must be kept away from heat sources. | 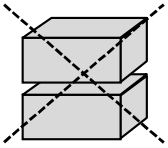 | DO NOT STACK. |

Transport the unit as near as possible to the installation location before removing the packaging.
Lifting can be done either:

- with a fork-lift, inserting the forks under the base beams
- by inserting 4 sections of Ø 50mm, 4mm-thick steel tube in the special holes in the base beams of the unit and using the ends as lifting points.

**<u>Warning:</u> check the drawing attached to the unit or the installation drawings printed on the last few pages of this manual.**

Unit dimensions are given in the technical data tables and installation drawings included with the unit.

## RECEIVING AND STORING THE UNIT

Every unit leaves the factory in perfect condition. Therefore please check the unit very carefully on delivery and notify the transport company immediately and in writing of any damage.



**Check that the load capacity of the floor is sufficient to support the weight of the unit.**

The unit must be located on a solid and flat surface. After positioning, with the help of a spirit level use the optional adjustable feet (and spacers if necessary) to level the unit: **any gradient must be no more than 0.5°.**

**IMPORTANT: the unit must never be tilted or turned upside down.**

The characteristics of the fans **do not allow the ducting of condensation** air.

## POSITIONING THE UNIT – WORKING SPACE

This unit is designed and built for outdoor installation with free airflow to the condenser coils. The unit can be installed in a semi-closed position if the ventilation system is efficient enough to maintain temperatures below the values given in the section on Function Limits. The fan intake airflow through the condenser coils must not be obstructed in order not to compromise the efficiency of the unit and to prevent the unit being stopped by the safety devices. In any case the safety regulations of the installation must be respected, as well as the minimum access distances shown in the diagram below. It is also recommended that the unit is protected from the wind by positioning so that the coils are parallel to the direction of the prevailing wind.

It is recommended that the unit is protected from rain, snow, water falling from gutters, etc. Do not install the unit near the sea (minimum recommended distance 200m) or near sulphur springs. If the installation location is particularly harsh, contact the Uniflair Sales dept. for possible technical solutions.

The optional rubber feet reduce the transmission of vibrations to the floor.

*Minimum recommended distance to be left clear for correct unit functioning*

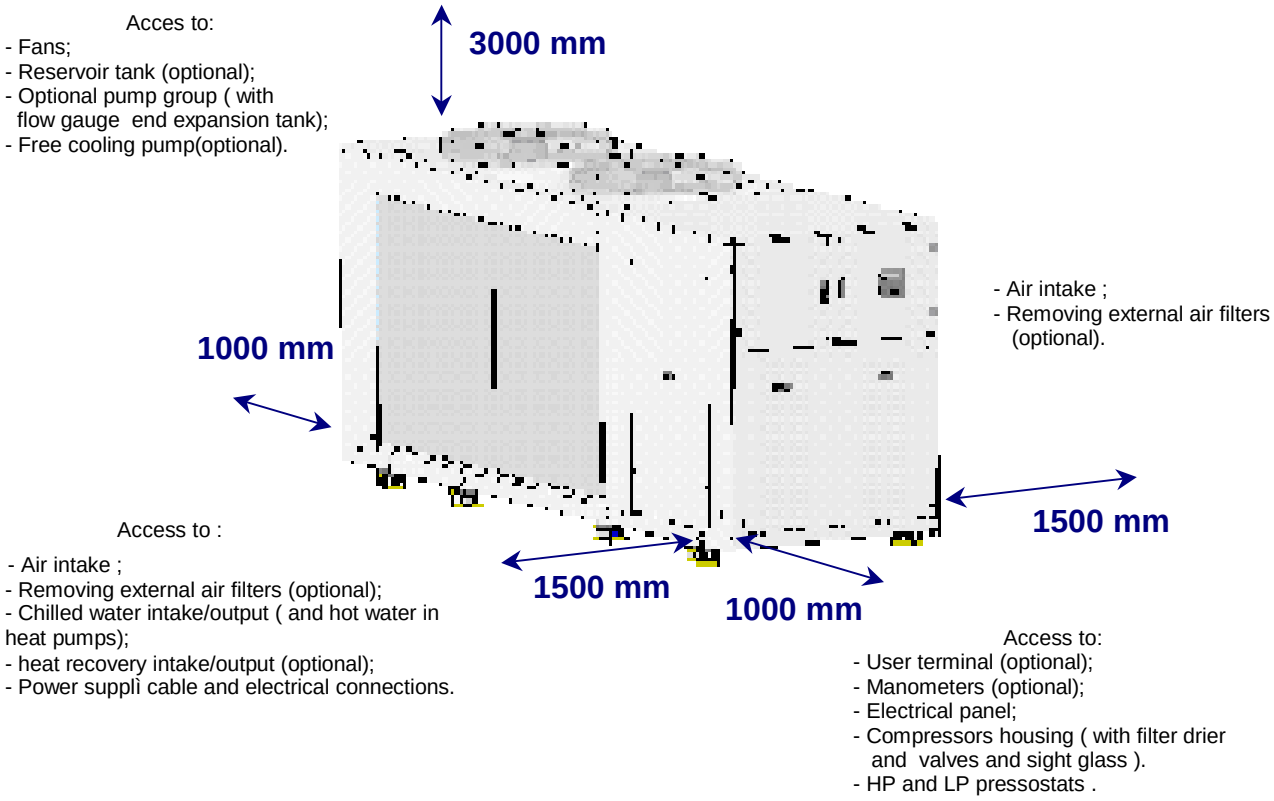


## HYDRAULIC CONNECTIONS
***(see also the enclosed installation drawings and hydraulic diagram)***

**ATTENZIONE :**

All'atto dell'installazione dell'unità in sito devono essere previsti giunti elastici in prossimità alla macchina nelle tubazioni dell'acqua

**1) CHECK** that the section of the chilled water pipes and the power of the circulation pump fitted are sufficient. An inadequate water flow significantly reduces the cooling capacity of the unit.

**2) CHECK** the water intake/output directions. There are labels next to the intake, output and heat recovery connections as shown in the diagram below. The (S) drain valves are part of the special input and output connections.

**3) CONNECT** the chiller using flexible tubes to stop the transmission of vibrations. Fit shut-off valves so that the unit can be isolated from the water circuit;

**4) INSULATE** the chilled water pipes to stop the formation of condensation;

**5) FIT** temperature measuring points on the pipes near the intake and output connections;

**6) INSTALL** a metal filter in the section of pipe next to the unit intake to prevent pieces of welding or flakes of rust entering the heat exchanger.

**7) PROVIDE** a discharge well near the output connection in case the unit needs to be emptied

**INGRESSO - INLET**
**EINGANG - ENTREE**
**$I_{ev}$** ➡ **ENTRADA**

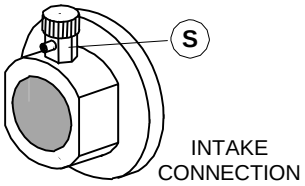


INTAKE CONNECTION

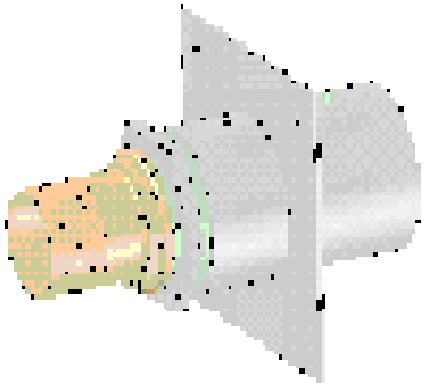

**USCITA - OUTLET**
**AUSGANG - SORTIE**
**$U_{ev}$** ⬅ **SALIDA**

| **Ø only for external connections( with pump group)** | | | | |
|---|---|---|---|---|
| **Modell** | Water Intake ***** | Water Output * | Heat recovery intake | Heat recovery output |
| **00574** | Ø 3” bsp f | Ø 3” bsp f | Ø 1 1/4” bsp | Ø 2” bsp |
| **00644** | Ø 3” bsp f | Ø 3” bsp f | Ø 1 1/4” bsp | Ø 2” bsp |
| **00744** | Ø 3” bsp f | Ø 3” bsp f | Ø 1 1/4” bsp | Ø 2” bsp |
| **00964** | Ø 3” bsp f | Ø 3” bsp f | Ø 1 1/4” bsp | Ø 2” bsp |
| **01084** | Ø 4” Vitaulic | Ø 4” Vitaulic | Ø 1 1/4” bsp | Ø 2” bsp |
| **01204** | Ø 4” Vitaulic | Ø 4” Vitaulic | Ø 1 1/4” bsp | Ø 2” bsp |
| **Ø only for external connections( without pump group)** | | | | |
| **00574** | Ø 3” bsp m | Ø 3” bsp m | Ø 1 1/4” bsp | Ø 2” bsp |
| **00644** | Ø 3” bsp m | Ø 3” bsp m | Ø 1 1/4” bsp | Ø 2” bsp |
| **00744** | Ø 3” bsp m | Ø 3” bsp m | Ø 1 1/4” bsp | Ø 2” bsp |
| **00964** | Ø 4” Vitaulic | Ø 4” Vitaulic | Ø 1 1/4” bsp | Ø 2” bsp |
| **01084** | Ø 4” Vitaulic | Ø 4” Vitaulic | Ø 1 1/4” bsp | Ø 2” bsp |
| **01204** | Ø 5” Vitaulic | Ø 5” Vitaulic | Ø 1 1/4” bsp | Ø 2” bsp |

# LOW-TEMPERATURE OPERATION WITH ANTIFREEZE MIXTURE

In the cooling phase, standard units can be operated with a water output temperature of **5°C**.

It is possible to cool fluids **down to a temperature of -10°C** as long as the chilled water contains enough anti-freeze liquid to prevent freezing inside the evaporator and by using special low-temperature versions of the unit (consult the nearest UNIFLAIR service agent).

For low temperature function the settings of the LP pressostat and anti-freeze thermostat are changed and special low temperature seals are used.

The table below gives the minimum recommended percentages of glycol in relation to the output temperature of the cooled fluid; it also gives the settings for the minimum pressostat and the antifreeze safety threshold.

| | | | | | | | |
|---|---|---|---|---|---|---|---|
| ***MINIMUM FLUID TEMPERATURE WITH UNIT OPERATING*** | | 5,0 °C | 3,0 °C | -5,0 °C | -10,0 °C | -18,0 °C | -28,0°C |
| ***FREEZING TEMPERATURE*** | | 0 °C | -4,4 °C | -9,6 °C | -16,1 °C | -24,5 °C | -35,5 °C |
| ***PERCENTAGE OF ETHYLENE GLYCOL by volume*** | | **0%** | **10%** | **20%** | **30%** | **40%** | **50%** |
| **ARAC / ARAH** | | | | | | | |
| *Cooling power correction factor* | $R_0$ | **1** | 0,997 | 0,990 | 0,989 | 0,984 | 0,978 |
| *Compressor power consumption correction factor* | $P_0$ | **1** | 0,999 | 1,002 | 0,996 | 0,994 | 0,992 |
| *Evaporator pressure drop correction factor* | $C_0$ | **1** | 1,159 | 1,337 | 1,576 | 1,838 | 2,144 |
| **ARAF** | | | | | | | |
| *Cooling power correction factor* | $R_0$ | 1,006 | 1,003 | **1** | 0,991 | 0,990 | 0,984 |
| *Compressor power consumption correction factor* | $P_0$ | 1,002 | 1,001 | **1** | 1,002 | 0,996 | 0,994 |
| *Evaporator pressure drop correction factor* | $C_0$ | 0,742 | 0,856 | **1** | 1,162 | 1,372 | 1,599 |

***Corrected* cooling capacity (**) =** *Nominal cooling capacity x $R_0$.*

***Corrected* compressor power consumption (**):** *Rated power consumption x $P_0$.*

**Correct evaporator pressure drop, water side (**):** *Evaporator pressure drop x $C_0$.*

*(**) with the same evaporator inlet and outlet temperatures.*

***NOTES***:
***(1)*** *If it is necessary to produce liquid at less than -10°C, Uniflair Italia srl must be informed at the time of ordering.*
***(2)*** *The dimensions of the pump motors used in standard units permit a maximum glycol percentage of 30%*

***IMPORTANT*: insulate tubes and chilled water connections carefully to avoid the formation of frost.**

The percentage of glycol used must reflect the minimum external air temperature of the installation.
**Before the outside temperature reaches the freezing point of the mixture the unit's hydraulic circuit must be drained.**

Special units with 30% glycol by weight can function at temperatures down to a minimum temperature of -10°C, below which the hydraulic circuit must be drained to prevent freezing**.**

**IMPORTANT WARNING**

Standard units are designed for output temperatures down to 3°C. Units with glycoled water can operate with water output temperatures down to -10°C.
**Free cooling chillers must be loaded with antifreeze.**
If the optional heating cable is fitted, the electrical power supply must not be interrupted when the unit is turned off.

## ELECTRICAL CONNECTIONS
***(See also the electrical diagram enclosed with the unit)***

**Before doing any work on electrical components make sure that the power supply is disconnected.**
*Correct and accurate electrical connections which comply with applicable safety regulations are vital for preventing injuries and for correct long-term unit operation.*

# GENERAL INSTRUCTIONS

CONNECTION TO SUPPLY MAINS

To connect power cables, you have to remove the cover plate on the bottom of the unit's enclosure. Since the unit is placed outdoors, IP55 insulation protection must be maintained, hence using suitable cable clamps/sheath clamps and/or junction boxes. Cables must be connected by first removing the Plexiglas cover protecting the poles of the disconnector and then fastening the cables' wire terminals on the RELEVANT HOLES provided for this purpose. Once you have done, make sure you refit the cover. It is vital phases be connected properly in the position indicated on the wiring diagram supplied with the unit since if they are connected in any other way, the unit will not work. Bear in mind, above all: Electrical connections must be made by qualified installers. Power leads must be protected upstream against the effects of short

To connect power cables, you have to remove the cover plate on the bottom of the unit's enclosure. Since the unit is placed outdoors, IP55 insulation protection must be maintained, hence using suitable cable clamps/sheath clamps and/or junction boxes. Cables must be connected by first removing the Plexiglas cover protecting the poles of the disconnector and then fastening the cables' wire terminals on the RELEVANT HOLES provided for this purpose. Once you have done, make sure you

refit the cover. It is vital phases be connected properly in the position indicated on the wiring diagram supplied with the unit since if they are connected in any other way, the unit will not work. Bear in mind, above all: Electrical connections must be made by qualified installers. Power leads must be protected upstream against the effects of short

**1) OPEN** the cover of the electrical panel on the front of the unit above the compressor housing ;

**2) CHECK** that the power supply corresponds to the information given on the unit's data plate (voltage, phases, frequency)

**3) ATTACH** the power supply cable, passing it through one of the pre-cut holes in the unit shown in the diagram below.

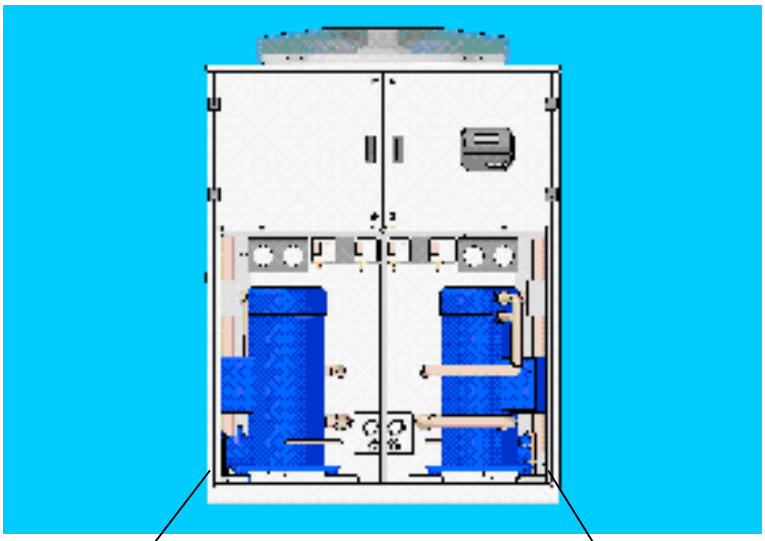


There are holes in the base of the electrical panel to allow passing of:

**a.** power supply cable to be connected to the IG main switch terminals on the left of the electrical panel;

**b.** signal cables to be connected to the microprocessor control terminals on the right of the electrical panel.

The electric cable is not supplied by UNIFLAIR ITALIA Spa and must be correctly connected and fitted by the installer. Select the cable **according to the length and installation required**, the maximum power absorbtion of the chiller and to avoid a tension drop during operation (nominal power supply must be between ± 10%).

Minimum recommended dimensions for power supply cable.

| Model | 0574A | 0644A | 0744A | 0964A | 1084A | 1204A |
|---|---|---|---|---|---|---|
| Power supply cable | **3 x 70 + 35 PE** | | **3 X 95 + 50 PE** | | **3 X 150 + 95 PE** | |

**4) CONNECT** the three power supply phases to the terminals of the IG main switch after checking that there is no power supply to the unit. Check that the wires are correctly inserted and tighten the screws.
To switch the unit on and off or to change heat pump function between cooling and heating from a remote switch::

**5) CONNECT** the remote ON/OFF switch to terminals 20 and 50 on the electrical panel;

**6) CONNECT** the remote SUMMER/WINTER selector to terminals 20 and 60.

For remote alarm signalling (without a remote user terminal):

**7) USE** terminals 961,960 and 962 for the PUMP ALARM signal to protect the pump motors;

**8) CLOSE** the IG main switch and check that the LEDs light up on the RSF phase sequence relay on the top of the electrical panel. If this does not happen, invert two of the phases.



***ATTENZIONE**: **IMPORTANT**: inside the unit on the right there is a plastic tube for the introduction of air to cool the electrical panel. Cables must not be passed through this tube and it must be checked regularly to make sure that the free flow of air is not blocked by leaves, dust, etc.*

## REMOTE CONTROL, LOCAL NETWORKS AND SUPERVISION SYSTEMS

### UNIFLAIR SUPERVISION

**NETVISOR** is UNIFLAIR'S new supervision system that enables the supervision of all Uniflair products through the connection of TCP/IP protocol network (Ethernet Network).
**UNIFLAIR'S NETVISOR** has a "WEB based" graphical interface, i.e. that can be visualised as a WEB page, through the use of any Internet browser (ex. Internet Explorer 5.0 or advanced versions). Please note that the browser and the **NETVISOR** must be installed on the same PC.

**UNIFLAIR's NETVISOR** supervision system is based on the connection between the units to control (chillers, precision air conditioning units, telecom units) and an RS485 line. Uniflair offers 3 different types of supervision systems that need different devices in order to manage RS485 line.
Units connected to a local supervision system: the connection is managed by a local PC (using a serial adaptor RS485/RS232) where the local **UNIFLAIR NETVISOR** is installed**.**
Units connected to a remote supervision system: the connection is managed through PLANTWATCH; this is a wall-control system equipped with a display and a keyboard.

PLANTWATCH can save historical events and signal the alarm events on connected units.
PLANTWATCH is available in two versions, without internal modem (basic version) or with a PSTN internal modem. PLANTWATCH (both versions) can connect, via modem, to a remote PC (where **UNIFLAIR NETVISOR** remote is installed) in order to signal alarm events and to upload historical data. Moreover, it is possible to connect from a remote PC to PLANTWATCH in order to monitor (in remote) the units or to download historical data.
Uniflair also supplies a remote monitoring configuration; this solution combines the advantages of local and remote supervision: local PC manages RS485 line (using **NETVISOR** local) and it can connect to a remote PC (equipped with **NETVISOR** remote).

**NETVISOR** manages analogic PTSN modem and GSM modem for sending FAXES or SMS. Moreover, **NETVISOR** can be used as a WEB server, i.e. via PC's connected with Ethernet networks using an Internet browser in order to download WEB pages that visualise unit data. This operation is also possible through the use of WEBGATE that manages RS485 line and is connected with Ethernet networks as WEB server (with a specific IP address).
Local or remote PC (not supplied by Uniflair) requirements: microprocessor Pentium III, 64Mb RAM, USB adaptor and serial adaptor (COM) free, O.S. Windows 98, NT, 2000, XP.

Example for **UNIFLAIR NETVISOR** system: via RS485 network for local supervision

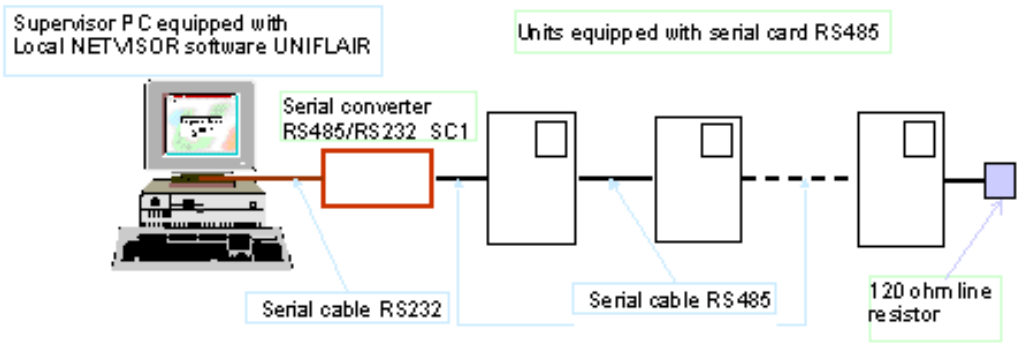


Scheme for UNIFLAIR units via RS485 network for remote supervision with **UNIFLAIR NETVISOR** and PLANTWATCH.

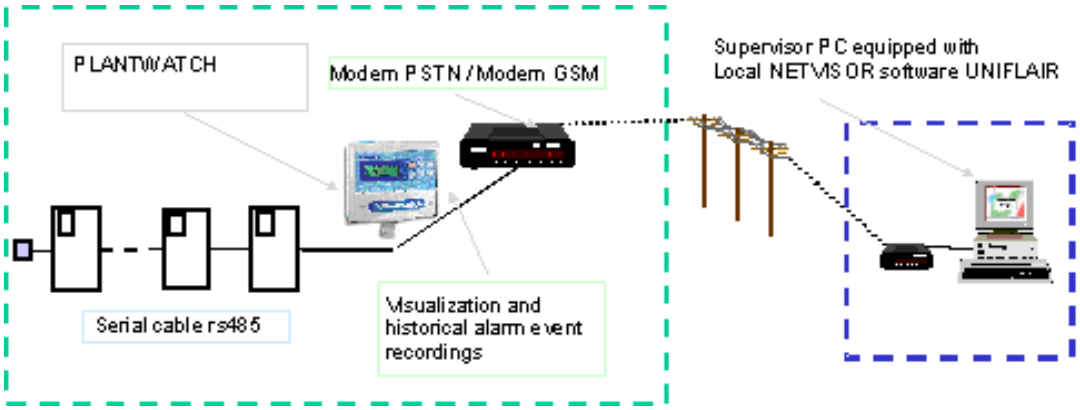

Scheme for UNIFLAIR units via RS485 network for remote monitoring with **UNIFLAIR NETVISOR** local and remote.

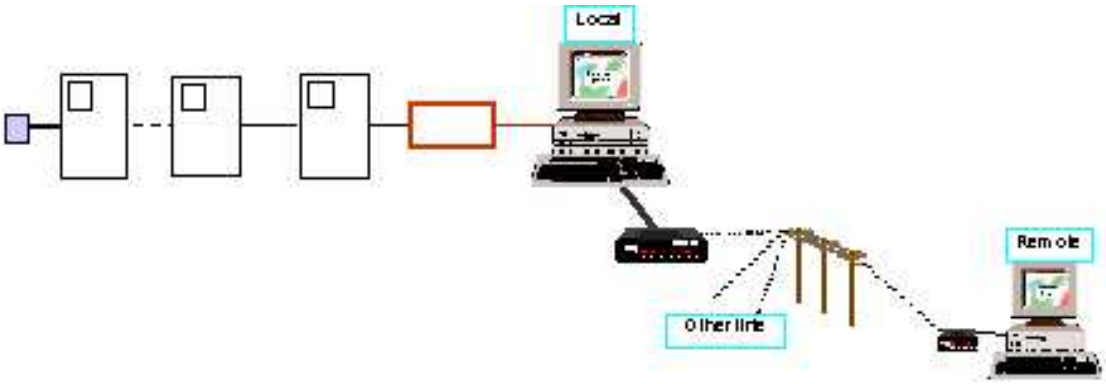


## FITTING THE OPTIONAL RS485 BOARD

1. Disconnect the power supply to the board;
2. Insert the RS485 card on the SERIAL connector of the main board;
3. When making the connection of the serial line, pay attention to polarities as shown;
4. The serial line must be closed by means of a 120Ω - 1/4W resistance, placed between the TX/RX+ and TX/RX- terminals of the board at the endline of the network.
5. The address of the board is set using the dip switches, adding the HA parameter value (default = 1):

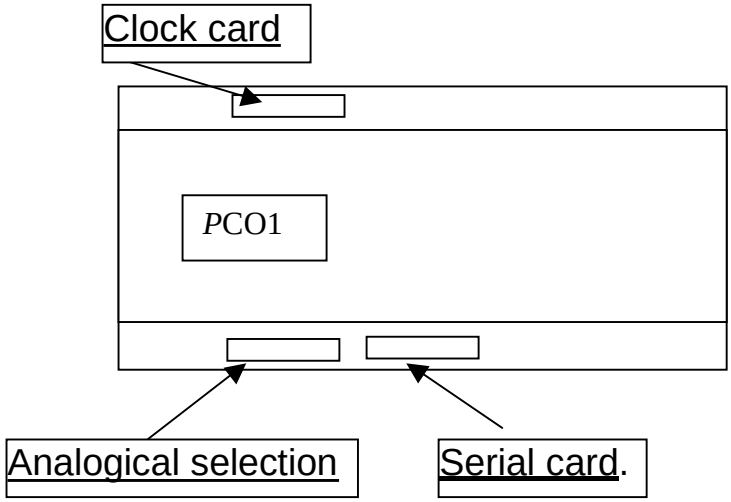


| Net. Addr. | Par. HA | Dip 1 | Dip 2 | Dip 3 | Dip 4 |
|---|---|---|---|---|---|
| 0+1 | 1 | OFF | OFF | OFF | OFF |
| 16+1 | 1 | OFF | OFF | OFF | ON |
| 32+1 | 1 | OFF | OFF | ON | OFF |
| 48+1 | 1 | OFF | OFF | ON | ON |
| 64+1 | 1 | OFF | ON | OFF | OFF |

| Net. Addr. | Par. HA | Dip 1 | Dip 2 | Dip 3 | Dip 4 |
|---|---|---|---|---|---|
| 80+1 | 1 | OFF | ON | OFF | ON |
| 96+1 | 1 | OFF | ON | ON | OFF |
| 112+1 | 1 | OFF | ON | ON | ON |
| 128+1 | 1 | ON | OFF | OFF | OFF |

# CHECK LIST FOR START-UP AND TESTING

After installation and before start-up the following points should be checked. In the event of problems, consult the troubleshooting section in this manual or contact the technical assistance staff at UNIFLAIR

**1)** **CLOSE** the general switch and arm the automatic switches IM1, IM2, e IM8;

**2)** **OIL HEATING**
*(standard on heat pump versions, optional on cooling-only versions)*
Connect the unit to the power supply **at least 12 hours** before the seasonal start-up of the system in order to heat the compressor oil sufficiently. The reason for this is that during longer shutdowns there may be a spontaneous migration of refrigerant with re-condensation of liquid in the compressor crankcase heaters. When the compressor is started this liquid can flow into the cylinders, damaging the compressor. The pre-heating of the oil is necessary to eliminate this risk. Do not switch off the power supply for weekly shutdowns.

AT LEAST 12 HOURS after the power supply was connected, start the unit as follows:

**3)** OPEN all valves and water intercept taps;
SWITCH ON the water circulation pump and check correct function;

**4)** **SWITCHING ON THE CONTROL** (Units with mP20II control only)
Connect the power supply to the auxiliary circuit of the unit electrical panel (IM8); the control is activated as follows:

- the yellow power LED on the circuit board switches on (see Layout of circuit board);
- there is a short acoustic signal;
- the display shows the start-up screen for 10 seconds, then goes to unit stopped status;

When the unit is **connected** to the power supply but **not operating**, 3 fields are active on the terminal display:
- Current time and date (if clock circuit it is fitted);
- Water return temperature and (in free-cooling units only) external temperature;
- Indication of unit switched off by: ON/OFF switch, supervision system, time program, manual override.

| |
|---|
| WATER IN TEMP.. . . . . °C |
| WATER OUT TEMP. . . . . °C |

TO TURN ON the unit press the 

button on the control; close the remote On/Off switch (if fitted).
CHECK that no red alarm LED is on. In the event that a red LED does come on, refer to the section on Troubleshooting and to the mP20II microprocessor control instruction manual.

Use the local terminal to turn the unit off so that the pump stops at least 10 seconds after the chiller: this prevents the unit from stopping when there is no water flow.

# PROGRAMMING AND REGULATION

This system can be programmed according to the specific needs of its user, normally employed in technological applications, its features enables an independent control of all compressors on/off switches.
The regulation program, found in the FLASH EPROM memory (base card), is identified by an alphanumeric code – its logic is explained here below.

Control parameters (set points, alarms) and display of data and events (reading of set points and control values, operating events or/and alarms) **are all programmed** through the **User terminal** as shown below.



## PROGRAM VERSION

Press  to view the program version that has been installed in the Flash Eprom memory.
You will need this information when in order to connect more units in a local LAN net work, all units connected must have the same program version. When using a service centre it is important to inform technicians on the version of the regulation program installed in the Flash Eprom.

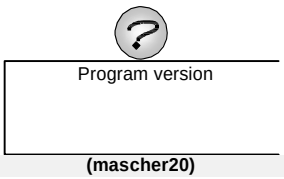

(mascher20)


**Card pCO1**


**Control mP20II**

**IMPORTANT WARNING**

**It is essential to read carefully the instructions in the enclosed microprocessor control instruction manual.**
Electronic components are sensitive to static discharges from the human body. Touch an earth connection before handing any electronic component and/or the base circuit.

## REGULATION OF COOLING CAPACITY

The unit's cooling capacity is regulated by activating the various cooling capacity steps, depending on the temperature measured by intake water sensor T2.

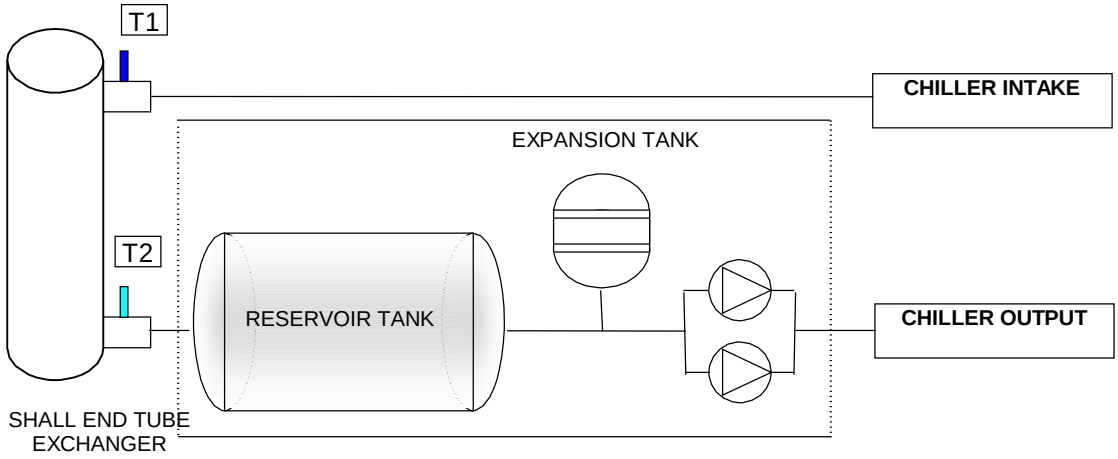


Sensor T2 on the chiller output line interrupts compressor function when the temperature drops below the value set for risk of freezing.

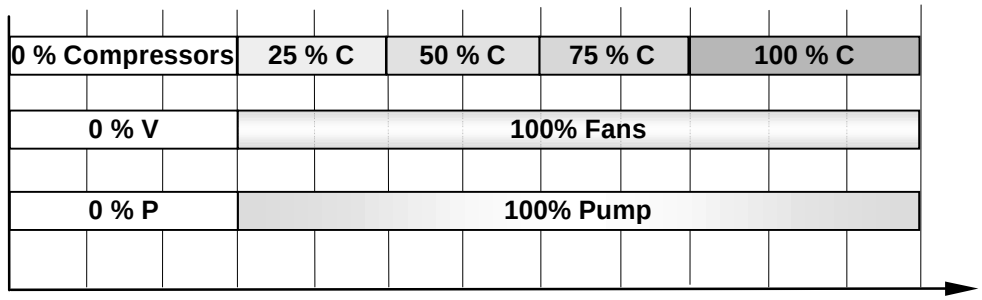


*Example of regulation as a function of sensor T2 temperature reading.*

# SETTING THE SAFETY DEVICES

The function parameter values set on the microprocessor control are given in the enclosed instruction manual. The table below gives the settings of the safety devices; these are also on the data plate on the unit.

| Component | Setting | Differential | Re-set |
|---|---|---|---|
| **Refrigerant circuit (R22 – R407C)** | | | |
| High pressure pressostat (**AP1-AP2**) | 27.5 bar | -- | manual |
| Low pressure pressostat (**BP1-BP2**) [1] | 2.0 bar | 1.0 bar | 3.0 bar |
| Anti-freeze protection [1] | 4 °C | 4 °C | |
| Refrigerant safety valve (**VSA1-VSA2**) | 30.0 bar | -- | -- |
| **Water circuit** | | | |
| Water side safety valve | 6.0 bar | | |

[1] Values refer to standard version with pure water.

*Setting of safety devices.*

## ELECTRICAL CURRENT Cooling only – basic version

| ARAC | Compressors circuit1[1] | | | | | Compressors circuit 2[1] | | | | |
|---|---|---|---|---|---|---|---|---|---|---|
| MODELLO | OP | OA | FLI | FLA | LRA | OP | OA | FLI | FLA | LRA |
| 0574A[4] | 19 | 35 | 23 | 54 | 150 | 19 | 35 | 23 | 54 | 150 |
| 0644A | 22,6 | 42,7 | 26 | 58 | 150 | 22,6 | 42,7 | 26 | 58 | 150 |
| 0744A | 24,3 | 44,3 | 30,9 | 70 | 175 | 24,3 | 44,3 | 30,9 | 70 | 175 |
| 0964A | 33,6 | 60,1 | 47,7 | 71,4 | 215 | 33,6 | 60,1 | 47,7 | 71,4 | 215 |
| 1084A[4] | 38,2 | 65,5 | 52,8 | 85 | 270 | 38,2 | 65,5 | 52,8 | 85 | 270 |
| 1204A | 44,1 | 74,9 | 58 | 98,6 | 270 | 44,1 | 74,9 | 58 | 98,6 | 270 |

| ARAC | Fan | | | | |
|---|---|---|---|---|---|
| MODELS | No. | OP | OA | FLI | FLA |
| 0574A[4] | 2 | 1,8 | 3,4 | 2 | 4 |
| 0644A | 2 | 1,8 | 3,4 | 2 | 4 |
| 0744A | 3 | 1,8 | 3,4 | 2 | 4 |
| 0964A | 3 | 1,8 | 3,4 | 2 | 4 |
| 1084A[4] | 4 | 1,8 | 3,4 | 2 | 4 |
| 1204A | 4 | 1,8 | 3,4 | 2 | 4 |

| ARAC | Complete unit (basic version) | | | | |
|---|---|---|---|---|---|
| MODELS | OP [kW] | OA [A] | FLI [kW] | FLA [A] | LRA[3] [A] |
| 0574A | 41,7 | 76,8 | 50 | 116 | 237 |
| 0644A | 48,9 | 92,2 | 56 | 124 | 245 |
| 0744A | 53,9 | 98,8 | 67,8 | 152 | 292 |
| 0964A | 72,7 | 130,4 | 101,4 | 154,8 | 334,1 |
| 1084A | 83,6 | 144,6 | 113,6 | 186 | 406,7 |
| 1204A | 95,3 | 163,4 | 124 | 213,2 | 433,9 |

| ARAC | Pompe standard (opzionali) [2] | | | Pompe alta prev. (opzionali) [2] | | |
|---|---|---|---|---|---|---|
| MODELS | FLI | FLA | LRA | FLI | FLA | LRA |
| 0574A | 3 | 6,6 | 51,48 | 4 | 9,6 | 56,64 |
| 0644A | 3 | 6,6 | 51,48 | 4 | 9,6 | 56,64 |
| 0744A | 4 | 9,6 | 56,64 | 4 | 9,6 | 56,64 |
| 0964A | 4 | 9,6 | 56,64 | 7,5 | 16 | 148,8 |
| 1084A | 4 | 9,6 | 56,64 | 7,5 | 16 | 56,64 |
| 1204A | 4 | 9,6 | 56,64 | 7,5 | 16 | 56,64 |

| | |
|---|---|
| (1) | For each circuit |
| (2) | Only 1 pump runs when the unit is in operation; even for units with two pumps in this case 1 pump is always in stand-by |
| (3) | Calculated durino critical working conditions: all fans ON , there compressors running along with the last compressor swiched-on all funs running al maximum speed. |
| (4) | LRA refers to the compressor with largest dimension |
| OP | Operate input power at nominal condition ( water 12 / 7°C, outdoor temperature 35°C, refrigerant R407C) [kW] |
| OA | Operate current al nominal conditions[A] |
| FLI | Full load input power [kW] |
| FLA | Full load current [A] |
| LRA | Start-upcurrent [A] |

## ELECTRICAL CURRENT Heat pump series – basic version

| ARAH | Compressors circuit1(1) | | | | | Compressors circuit 2(1) | | | | |
|---|---|---|---|---|---|---|---|---|---|---|
| MODELS | OP | OA | FLI | FLA | LRA | OP | OA | FLI | FLA | LRA |
| 0574A(4) | 17,2 | 33,2 | 23 | 54 | 150 | 17,2 | 33,2 | 23 | 54 | 150 |
| 0644A | 18,6 | 39,5 | 26 | 58 | 150 | 18,6 | 39,5 | 26 | 58 | 150 |
| 0744A | 26,7 | 49,8 | 30,9 | 70 | 175 | 26,7 | 49,8 | 30,9 | 70 | 175 |
| 0964A | 32,7 | 59,6 | 47,7 | 71,4 | 215 | 32,7 | 59,6 | 47,7 | 71,4 | 215 |
| 1084A(4) | 35,1 | 64,7 | 52,8 | 85 | 270 | 35,1 | 64,7 | 52,8 | 85 | 270 |
| 1204A | 36,2 | 68,2 | 58 | 98,6 | 270 | 36,2 | 68,2 | 58 | 98,6 | 270 |

| ARAH | Fun | | | | |
|---|---|---|---|---|---|
| MODELS | No. | OP | OA | FLI | FLA |
| 0574A(4) | 2 | 1,8 | 3.4 | 2 | 4 |
| 0644A | 2 | 1,8 | 3.4 | 2 | 4 |
| 0744A | 3 | 1,8 | 3.4 | 2 | 4 |
| 0964A | 3 | 1,8 | 3.4 | 2 | 4 |
| 1084A(4) | 4 | 1,8 | 3.4 | 2 | 4 |
| 1204A | 4 | 1,8 | 3.4 | 2 | 4 |

| ARAH | Complete unit (base) | | | | |
|---|---|---|---|---|---|
| MODELS | OP [kW] | OA [A] | FLI [kW] | FLA [A] | LRA(3) [A] |
| 0574A | 37,9 | 73,3 | 50 | 116 | 237 |
| 0644A | 40,8 | 85,8 | 56 | 124 | 245 |
| 0744A | 58,9 | 109,9 | 67,8 | 152 | 292 |
| 0964A | 71 | 129,4 | 101,4 | 154,8 | 334,1 |
| 1084A | 77 | 142,4 | 113,6 | 186 | 406,7 |
| 1204A | 79,6 | 150,1 | 124 | 213,2 | 433,9 |

| ARAH | Standard Pump (optional) (2) | | | High pressare pump(optional) (2) | | |
|---|---|---|---|---|---|---|
| MODELS | FLI | FLA | LRA | FLI | FLA | LRA |
| 0574A | 3 | 6,6 | 51,48 | 4 | 9,6 | 56,64 |
| 0644A | 3 | 6,6 | 51,48 | 4 | 9,6 | 56,64 |
| 0744A | 4 | 9,6 | 56,64 | 4 | 9,6 | 56,64 |
| 0964A | 4 | 9,6 | 56,64 | 7,5 | 16 | 148,8 |
| 1084A | 4 | 9,6 | 56,64 | 7,5 | 16 | 56,64 |
| 1204A | 4 | 9,6 | 56,64 | 7,5 | 16 | 56,64 |

| | |
|---|---|
| (1) | For each circuit |
| (2) | Only 1 pump runs when the unit is in operation; even for units with two pumps in this case 1 pump is always in stand-by |
| (3) | Calculated durino critical working conditions: all fans ON , there compressors running along with the last compressor swiched-on all funs running al maximum speed. |
| (4) | LRA refers to the compressor with largest dimension |
| OP | Operate input power at nominal condition ( water 12 / 7°C, outdoor temperature 35°C, refrigerant R407C) [kW] |
| OA | Operate current al nominal conditions[A] |
| FLI | Full load input power [kW] |
| FLA | Full load current [A] |
| LRA | Start-upcurrent [A] |

## ELECTRICAL CURRENT Free-cooling series– modulating condensation

| ARAF | Compressors circuit1(1) | | | | | Compressors circuit 2(1) | | | | |
|---|---|---|---|---|---|---|---|---|---|---|
| MODELS | OP | OA | FLI | FLA | LRA | OP | OA | FLI | FLA | LRA |
| 0574A(4) | 19,7 | 36,1 | 23 | 54 | 150 | 19,7 | 36,1 | 23 | 54 | 150 |
| 0644A | 23,4 | 43,6 | 26 | 58 | 150 | 23,4 | 43,6 | 26 | 58 | 150 |
| 0744A | 25,1 | 45,4 | 30,9 | 70 | 175 | 25,1 | 45,4 | 30,9 | 70 | 175 |
| 0964A | 33,5 | 62,1 | 47,7 | 71,4 | 215 | 33,5 | 62,1 | 47,7 | 71,4 | 215 |
| 1084A(4) | 39,9 | 67,8 | 52,8 | 85 | 270 | 39,9 | 67,8 | 52,8 | 85 | 270 |
| 1204A | 46,3 | 77,9 | 58 | 98,6 | 270 | 46,3 | 77,9 | 58 | 98,6 | 270 |

| ARAF | Fan | | | | | Free cooling pump | | |
|---|---|---|---|---|---|---|---|---|
| MODELS | No. | OP | OA | FLI | FLA | FLI | FLA | LRA |
| 0574A(4) | 2 | 1,8 | 3.4 | 2 | 4 | 3 | 6,6 | 51,48 |
| 0644A | 2 | 1,8 | 3.4 | 2 | 4 | 3 | 6,6 | 51,48 |
| 0744A | 3 | 1,8 | 3.4 | 2 | 4 | 4 | 9,6 | 56,64 |
| 0964A | 3 | 1,8 | 3.4 | 2 | 4 | 4 | 9,6 | 56,64 |
| 1084A(4) | 4 | 1,8 | 3.4 | 2 | 4 | 4 | 9,6 | 56,64 |
| 1204A | 4 | 1,8 | 3.4 | 2 | 4 | 4 | 9,6 | 56,64 |

| ARAF | Complete unit (basic version), mechanical cooling | | | | |
|---|---|---|---|---|---|
| MODELS | OP [kW] | OA [A] | FLI [kW] | FLA [A] | LRA(3) [A] |
| 0574A | 42,9 | 79,1 | 50 | 116 | 237 |
| 0644A | 50,4 | 94,1 | 56 | 124 | 245 |
| 0744A | 55,7 | 101 | 67,8 | 152 | 292 |
| 0964A | 75,5 | 134,4 | 101,4 | 154,8 | 334,1 |
| 1084A | 87 | 149,2 | 113,6 | 186 | 406,7 |
| 1204A | 100 | 169,4 | 124 | 213,2 | 433,9 |

| ARAF | Standard Pump (option) (2) | | | High pressure pump (option) (2) | | |
|---|---|---|---|---|---|---|
| MODELS | FLI | FLA | LRA | FLI | FLA | LRA |
| 0574A | 3 | 6,6 | 51,48 | 4 | 9,6 | 56,64 |
| 0644A | 3 | 6,6 | 51,48 | 4 | 9,6 | 56,64 |
| 0744A | 4 | 9,6 | 56,64 | 4 | 9,6 | 56,64 |
| 0964A | 4 | 9,6 | 56,64 | 7,5 | 16 | 148,8 |
| 1084A | 4 | 9,6 | 56,64 | 7,5 | 16 | 56,64 |
| 1204A | 4 | 9,6 | 56,64 | 7,5 | 16 | 56,64 |

| | |
|---|---|
| (1) | For each circuit |
| (2) | Only 1 pump runs when the unit is in operation; even for units with two pumps in this case 1 pump is always in stand-by |
| (3) | Calculated durino critical working conditions: all fans ON , there compressors running along with the last compressor swiched-on all funs running al maximum speed. |
| (4) | LRA refers to the compressor with largest dimension |
| OP | Operate input power at nominal condition ( water 12 / 7°C, outdoor temperature 35°C, refrigerant R407C) [kW] |
| OA | Operate current al nominal conditions[A] |
| FLI | Full load input power [kW] |
| FLA | Full load current [A] |
| LRA | Start-upcurrent [A] |

| MODELS<br>ARAC – ARAH - ARAF | | | 0574A | 0644A | 0744A | 0964A | 1084A | 1204A |
|---|---|---|---|---|---|---|---|---|
| Nr. of fans / Nr. of poles | | | 2 / 6 | 2 / 6 | 3 / 6 | 3 / 6 | 4 / 6 | 4 / 6 |
| Nr. of circuits / Nr of compressors | | | 2 / 4 | 2 / 4 | 2 / 4 | 2 / 4 | 2 / 4 | 2 / 4 |
| Compressor type | | | Scroll | Scroll | Scroll | Scroll | Scroll | Scroll |
| Nr. of coils | | | 1+1 | 1+1 | 1+1 | 1+1 | 1+1 | 1+1 |
| Evaporator | | | Shell-&-tube | Shell-&-tube | Shell-&-tube | Shell-&-tube | Shell-&-tube | Shell-&-tube |
| Nr. of evaporators | | | 1 | 1 | 1 | 1 | 1 | 1 |
| Evaporator hydraulic connections (without hydraulic kit) | | | 3”bsp m | 3”bsp m | 3”bsp m | 4”victaulic | 4”victaulic | 5”victaulic |
| Hydraulic connections to hydraulic kit | | | 3”bsp f | 3”bsp f | 3”bsp f | 3”bsp f | 4”victaulic | 4”victaulic |
| Nominal water flow (with pump group) (1) | | l/h | *20300* | *23200* | *28400* | *32700* | *39700* | *44800* |
| Evaporator water side pressure drop (without pump group) (1) | | kPa | *37* | *40* | *40* | *35* | *45* | *35* |
| Evaporator water side pressure drop (with pump group) (1) | | kPa | *80* | *95* | *97* | *78* | *103* | *105* |
| Standard Pump | Available head pressure (2) | kPa | 190 | 230 | 200 | 140 | 140 | 130 |
| | Adsorbed power | kW | 2,1 | 2,7 | 3 | 2,5 | 2,7 | 2,9 |
| High pressure pump | Available head pressure (2) | kPa | 260 | 310 | 290 | 310 | 300 | 300 |
| | Adsorbed power | kW | 2,7 | 3,5 | 3,7 | 3,3 | 3,5 | 3,6 |
| Nominal pressure | | Bar | 6 | 6 | 6 | 6 | 6 | 6 |
| Water tank | | L | 500 | 500 | 500 | 500 | 650 | 650 |
| PARTIAL HEAT RECOVERY (Optional) | | | | | | | | |
| Heat exchanger | | | plate | plate | plate | plate | plate | plate |
| Nr. of heat exchangers | | | 2 | 2 | 2 | 2 | 2 | 2 |
| Heating capacity (3) | | kW | 46 | 48 | 53 | 75 | 76 | 86 |
| Water flow | | L/h | 7912 | 8256 | 9116 | 12900 | 13072 | 14792 |
| Pressure drop | | kPa | 18 | 20 | 14 | 25 | 16 | 20 |
| Hydraulic connections | | bsp | 1 ¼” | 1 ¼” | 1 ¼” | 1 ¼” | 1 ¼” | 1 ¼” |
| TOTAL HEAT RECOVERY (Option available only with ARAC / ARAH) | | | | | | | | |
| Heat exchanger | | | Shell-&-tube | Shell-&-tube | Shell-&-tube | Shell-&-tube | Shell-&-tube | Shell-&-tube |
| Nr. of heat exchangers | | | 2 | 2 | 2 | 2 | 2 | 2 |
| Heating capacity (3) | | kW | 166 | 178 | 207 | 278 | 318 | 350 |
| Water flow | | L/h | 28550 | 30616 | 35600 | 47816 | 54696 | 60200 |
| Pressure drop | | kPa | 37 | 42 | 40 | 40 | 50 | 43 |
| Hydraulic connections | | bsp | 2” | 2” | 2” | 2” | 2” | 2” |

(1) *) Data refer to nominal conditions: water at 12 / 7°C, ambient at 35°C; refrigerant R407C.*
(2) with pump group ( optional).
***(3)** Data rifer to nominal conditions: water 40 / 45°C, outdoor temperature dry bulb: 7°C, wet bulb: 6°C, refrigerant R407C.*

# NOISE LEVEL

True to its policy of producing units with low noise emission levels, UNIFLAIR has created the new **AQUAFLAIR** range, which also reflects the company's pursuit of unbeatable flexibility.
The resulting versions offer low noise levels whilst favouring low cost, high performance or silent running. These versions are:

- **Standard**
- **With Modulating condensation control**
- **Low-noise**

Whilst featuring similar sound emission levels at high temperatures (over 35°C), these versions differ considerably at lower temperatures thanks to the different kinds of fan speed control and, for the low-noise version, thanks also to compressor compartment soundproofing.

**Standard version**
These kinds of unit feature a Star/Delta fan speed control. This means the unit's noise level is limited when operating conditions are not particularly demanding, thus **reducing maximum noise by approx. 6 - 7 dB(A)**.

**Version with Modulating Condensation Control**
In these versions, the control system switches fan speed continuously from a minimum value to a maximum value, keeping chiller noise to a minimum at all times whilst **cooling capacity is given priority**.

**Low-noise version**
In these units, fan speed again varies continuously from a minimum value to a maximum value, though the control system limits the latter as much as possible so that maximum values are only reached at high temperatures.
Indeed, the system favours silent running though without limiting working temperature conditions. This is how the units are created, which, together with **compressor compartment soundproofing**, can produce excellent results in terms of both cooling capacity and low noise level.

## *NOISE LEVEL*
## ARAC - ARAH

**SOUND PRESSURE** levels (measured with BRUEL & KIAER class 1 sound-level meter mod. 2260) measured with units working at full load, in a free field, 10m away from the unit, on the coil side, at a height of 1m above the ground. **SOUND POWER** level furnished in compliance with standard ISO3744. Tolerance on data is equivalent to +/- 1.5 dB. **NB:** data furnished refer to units working based on factory settings.

| | ***BASIC VERSION: MODULATING CONDENSATION CONTROL*** | | | | | | | |
|---|---|---|---|---|---|---|---|---|
| | ***Ambient Temperature*** | | | | | | | |
| **Model** | 10°C | 15°C | 20°C | 25°C | 30°C | 35°C | 40°C | 45°C |
| **0574A** | 40 | 44 | 49 | 53 | 57 | 57 | 57 | 57 |
| **0644A** | 40 | 44 | 49 | 53 | 57 | 57 | 57 | 57 |
| **0744A** | 41 | 45 | 50 | 54 | 58 | 58 | 58 | 58 |
| **0964A** | 41 | 45 | 50 | 54 | 58 | 58 | 58 | 58 |
| **1084A** | 42 | 46 | 51 | 55 | 59 | 59 | 59 | 59 |
| **1204A** | 42 | 46 | 51 | 55 | 59 | 59 | 59 | 59 |

***Operating conditions:****evaporator water temperature in/out 12°C / 7°C Refrigerant R407C; Glycol 20%*

| | ***SOUND POWER LEVEL*** | | | | | |
|---|---|---|---|---|---|---|
| **Model** | **0574A** | **0644A** | **0744A** | **0964A** | **1084A** | **1204A** |
| **Lw [dB-A]** | 85 | 85 | 86 | 86 | 87 | 87 |

***Operating conditions:****evaporator water temperature in/out 12°C / 7°C Refrigerant R407C; Glycol 20%; ambient temperature* ***35°C.***

| | ***LOW NOISE VERSION*** | | | | | | | |
|---|---|---|---|---|---|---|---|---|
| | ***Ambient Temperature*** | | | | | | | |
| **Modello** ***/*** | 10°C | 15°C | 20°C | 25°C | 30°C | 35°C | 40°C | 45°C |
| **0574A** | 37 | 39 | 43 | 46 | 48 | 48 | 54 | 55 |
| **0644A** | 37 | 39 | 43 | 46 | 48 | 48 | 54 | 55 |
| **0744A** | 38 | 40 | 44 | 47 | 49 | 49 | 55 | 56 |
| **0964A** | 38 | 40 | 44 | 47 | 49 | 49 | 55 | 56 |
| **1084A** | 39 | 41 | 45 | 48 | 50 | 50 | 56 | 57 |
| **1204A** | 39 | 41 | 45 | 48 | 50 | 50 | 56 | 57 |

***Operating conditions****:*
*evaporator water temperature in/out 12°C / 7°C*
*ambient temperature* ***33°C***
*Refrigerant R407C; Glycol 20%.*
**NB:** star operating mode is maintained up to an increasing ambient temperature below **35°C**

| | ***LOW NOISE VERSION*** | | | | | |
|---|---|---|---|---|---|---|
| **Model** | **0574A** | **0644A** | **0744A** | **0964A** | **1084A** | **1204A** |
| **Lw [dB-A]** | 76 | 76 | 77 | 77 | 78 | 78 |

***Operating conditions:*** *evaporator water temperature in/out 12°C / 7°C;ambient temperature* ***35°C****Refrigerant R407C; Glycol 20%.*

## *NOISE LEVEL*
## *ARAC – ARAH – modulating version*

***SOUND PRESSURE*** *levels (measured with BRÜEL & KJÆR class 1 sound-level meter mod. 2260) for each octave band frequency, measured with units working at full load, in a free field, 10m away from the unit, on the coil side, at a height of 1m above the ground.*

***SOUND POWER*** *level furnished in compliance with standard ISO3744.*
*Tolerance on data is equivalent to +/- 1.5 dB.*
***Note:*** *data furnished refer to units working based on factory settings.*

### *MODULATING CONDENSATION CONTROL*

| | SOUND PRESSURE LEVEL | | | | | | | | |
|---|---|---|---|---|---|---|---|---|---|
| *Model* | 63Hz | 125Hz | 250Hz | 500Hz | 1000Hz | 2000Hz | 4000Hz | 8000Hz | Lp [dB(A)] |
| 0574A | 48,0 dB | 51,5 dB | 48,5 dB | 52,5 dB | 53,5 dB | 51,0 dB | 43,0 dB | 35,0 dB | 57,0 |
| 0644A | 48,0 dB | 51,5 dB | 48,5 dB | 52,5 dB | 53,5 dB | 51,0 dB | 43,0 dB | 35,0 dB | 57,0 |
| 0744A | 49,0 dB | 52,5 dB | 49,5 dB | 53,5 dB | 54,5 dB | 52,0 dB | 44,5 dB | 36,0 dB | 58,0 |
| 0964A | 49,0 dB | 52,5 dB | 49,5 dB | 53,5 dB | 54,5 dB | 52,0 dB | 44,5 dB | 36,0 dB | 58,0 |
| 1084A | 50,0 dB | 53,5 dB | 50,5 dB | 54,5 dB | 55,5 dB | 53,0 dB | 45,5 dB | 37,0 dB | 59,0 |
| 1204A | 50,0 dB | 53,5 dB | 50,5 dB | 54,5 dB | 55,5 dB | 53,0 dB | 45,5 dB | 37,0 dB | 59,0 |

| | SOUND POWER LEVEL | | | | | |
|---|---|---|---|---|---|---|
| *Model* | 0574A | 0644A | 0744A | 0964A | 1084A | 1204A |
| Lw [dB(A)] | 85,0 | 85,0 | 86,0 | 86,0 | 87,0 | 87,0 |

***Operating conditions:***
*evaporator water temperature in/out 12°C / 7°C;*
*ambient temperature* ***35°C;*** *Refrigerant R407C.*

| | SOUND PRESSURE LEVEL – [dB(A)] – Ambient Temperature | | | | | | | |
|---|---|---|---|---|---|---|---|---|
| *Model* | 10°C | 15°C | 20°C | 25°C | 30°C | 35°C | 40°C | 45°C |
| 0574A | 40,5 | 44,0 | 48,5 | 53,0 | 57,0 | 57,0 | 57,0 | 57,0 |
| 0644A | 40,5 | 44,0 | 48,5 | 53,0 | 57,0 | 57,0 | 57,0 | 57,0 |
| 0744A | 41,5 | 45,0 | 49,5 | 54,0 | 58,0 | 58,0 | 58,0 | 58,0 |
| 0964A | 41,5 | 45,0 | 49,5 | 54,0 | 58,0 | 58,0 | 58,0 | 58,0 |
| 1084A | 42,5 | 46,0 | 50,5 | 55,0 | 59,0 | 59,0 | 59,0 | 59,0 |
| 1204A | 42,5 | 46,0 | 50,5 | 55,0 | 59,0 | 59,0 | 59,0 | 59,0 |

***Operating conditions:***
*evaporator water temperature in/out 12°C / 7°C;*
*Refrigerant R407C.*

## *NOISE LEVEL*
## *ARAC – ARAH – low noise version*

***SOUND PRESSURE*** *levels (measured with BRÜEL & KJÆR class 1 sound-level meter mod. 2260) for each octave band frequency, measured with units working at full load, in a free field, 10m away from the unit, on the coil side, at a height of 1m above the ground.*

***SOUND POWER*** *level furnished in compliance with standard ISO3744.*
*Tolerance on data is equivalent to +/- 1.5 dB.*
***Note:*** *data furnished refer to units working based on factory settings.*

### *LOW NOISE VERSION*

| | SOUND PRESSURE LEVEL | | | | | | | | |
|---|---|---|---|---|---|---|---|---|---|
| Model | 63Hz | 125Hz | 250Hz | 500Hz | 1000Hz | 2000Hz | 4000Hz | 8000Hz | Lp [dB(A)] |
| 0574A | 47,0 dB | 44,5 dB | 41,0 dB | 44,0 dB | 45,0 dB | 41,5 dB | 32,5 dB | 25,0 dB | 48,0 |
| 0644A | 47,0 dB | 44,5 dB | 41,0 dB | 44,0 dB | 45,0 dB | 41,5 dB | 32,5 dB | 25,0 dB | 48,0 |
| 0744A | 48,5 dB | 45,5 dB | 42,0 dB | 45,0 dB | 46,0 dB | 42,5 dB | 34,0 dB | 26,5 dB | 49,0 |
| 0964A | 48,5 dB | 45,5 dB | 42,0 dB | 45,0 dB | 46,0 dB | 42,5 dB | 34,0 dB | 26,5 dB | 49,0 |
| 1084A | 49,5 dB | 46,5 dB | 43,0 dB | 46,0 dB | 47,0 dB | 43,5 dB | 35,0 dB | 27,0 dB | 50,0 |
| 1204A | 49,5 dB | 46,5 dB | 43,0 dB | 46,0 dB | 47,0 dB | 43,5 dB | 35,0 dB | 27,0 dB | 50,0 |

| | SOUND POWER LEVEL | | | | | |
|---|---|---|---|---|---|---|
| Model | 0574A | 0644A | 0744A | 0964A | 1084A | 1204A |
| Lw [dB(A)] | 76,0 | 76,0 | 77,0 | 77,0 | 78,0 | 78,0 |

***Operating conditions:***
*evaporator water temperature in/out 12°C / 7°C;*
*ambient temperature* ***35°C;*** *Refrigerant R407C.*
***NB:*** *low noise operating mode is maintained up to an ambient temperature of* ***35°C***

| | SOUND PRESSURE LEVEL – [dB(A)] – Ambient Temperature | | | | | | | |
|---|---|---|---|---|---|---|---|---|
| Model | 10°C | 15°C | 20°C | 25°C | 30°C | 35°C | 40°C | 45°C |
| 0574A | 36,5 | 39,0 | 42,5 | 46,5 | 48,5 | 48,0 | 54,0 | 55,0 |
| 0644A | 36,5 | 39,0 | 42,5 | 46,5 | 48,5 | 48,0 | 54,0 | 55,0 |
| 0744A | 37,5 | 40,0 | 43,5 | 47,5 | 49,5 | 49,0 | 55,0 | 56,0 |
| 0964A | 37,5 | 40,0 | 43,5 | 47,5 | 49,5 | 49,0 | 55,0 | 56,0 |
| 1084A | 38,5 | 41,0 | 44,5 | 48,5 | 50,5 | 50,0 | 56,0 | 57,0 |
| 1204A | 38,5 | 41,0 | 44,5 | 48,5 | 50,5 | 50,0 | 56,0 | 57,0 |

***Operating conditions:***
*evaporator water temperature in/out 12°C / 7°C; Refrigerant R407C; ambient temperature* ***35°C.***

## *NOISE LEVEL*
## *ARAF*

***SOUND PRESSURE*** *levels (measured with BRÜEL & KJÆR class 1 sound-level meter mod. 2260) for each octave band frequency, measured with units working at full load, in a free field, 10m away from the unit, on the coil side, at a height of 1m above the ground.*

***SOUND POWER*** *level furnished in compliance with standard ISO3744.*
*Tolerance on data is equivalent to +/- 1.5 dB.*
***Note:*** *data furnished refer to units working based on factory settings.*

### *MODULATING CONDENSATION CONTROL*

| | SOUND PRESSURE LEVEL | | | | | | | | |
|---|---|---|---|---|---|---|---|---|---|
| ***Model*** | **63Hz** | **125Hz** | **250Hz** | **500Hz** | **1000Hz** | **2000Hz** | **4000Hz** | **8000Hz** | **Lp [dB(A)]** |
| **0574A** | 48,0 dB | 51,5 dB | 48,5 dB | 52,5 dB | 53,5 dB | 51,0 dB | 43,0 dB | 35,0 dB | 57,0 |
| **0644A** | 48,0 dB | 51,5 dB | 48,5 dB | 52,5 dB | 53,5 dB | 51,0 dB | 43,0 dB | 35,0 dB | 57,0 |
| **0744A** | 49,0 dB | 52,5 dB | 49,5 dB | 53,5 dB | 54,5 dB | 52,0 dB | 44,5 dB | 36,0 dB | 58,0 |
| **0964A** | 49,0 dB | 52,5 dB | 49,5 dB | 53,5 dB | 54,5 dB | 52,0 dB | 44,5 dB | 36,0 dB | 58,0 |
| **1084A** | 50,0 dB | 53,5 dB | 50,5 dB | 54,5 dB | 55,5 dB | 53,0 dB | 45,5 dB | 37,0 dB | 59,0 |
| **1204A** | 50,0 dB | 53,5 dB | 50,5 dB | 54,5 dB | 55,5 dB | 53,0 dB | 45,5 dB | 37,0 dB | 59,0 |

| | SOUND POWER LEVEL | | | | | |
|---|---|---|---|---|---|---|
| ***Model*** | **0574A** | **0644A** | **0744A** | **0964A** | **1084A** | **1204A** |
| **Lw [dB(A)]** | 85,0 | 85,0 | 86,0 | 86,0 | 87,0 | 87,0 |

**Condizioni di funzionamento:**
temperatura acqua ingresso / uscita evaporatore 12°C / 7°C;
temperatura ambiente **35°C;** Refrigerante R407C; glicole 20%.

***Operating conditions:***
*evaporator water temperature in/out 12°C / 7°C;*
*ambient temperature **35°C;** Refrigerant R407C; glycol 20%.*

### *LOW NOISE VERSION*

| | SOUND PRESSURE LEVEL | | | | | | | | |
|---|---|---|---|---|---|---|---|---|---|
| ***Model*** | **63Hz** | **125Hz** | **250Hz** | **500Hz** | **1000Hz** | **2000Hz** | **4000Hz** | **8000Hz** | **Lp [dB(A)]** |
| **0574A** | 47,0 dB | 44,5 dB | 41,0 dB | 44,0 dB | 45,0 dB | 41,5 dB | 32,5 dB | 25,0 dB | 48,0 |
| **0644A** | 47,0 dB | 44,5 dB | 41,0 dB | 44,0 dB | 45,0 dB | 41,5 dB | 32,5 dB | 25,0 dB | 48,0 |
| **0744A** | 48,5 dB | 45,5 dB | 42,0 dB | 45,0 dB | 46,0 dB | 42,5 dB | 34,0 dB | 26,5 dB | 49,0 |
| **0964A** | 48,5 dB | 45,5 dB | 42,0 dB | 45,0 dB | 46,0 dB | 42,5 dB | 34,0 dB | 26,5 dB | 49,0 |
| **1084A** | 49,5 dB | 46,5 dB | 43,0 dB | 46,0 dB | 47,0 dB | 43,5 dB | 35,0 dB | 27,0 dB | 50,0 |
| **1204A** | 49,5 dB | 46,5 dB | 43,0 dB | 46,0 dB | 47,0 dB | 43,5 dB | 35,0 dB | 27,0 dB | 50,0 |

| | SOUND POWER LEVEL | | | | | |
|---|---|---|---|---|---|---|
| ***Model*** | **0574A** | **0644A** | **0744A** | **0964A** | **1084A** | **1204A** |
| **Lw [dB(A)]** | 76,0 | 76,0 | 77,0 | 77,0 | 78,0 | 78,0 |

***Operating conditions:***
*evaporator water temperature in/out 12°C / 7°C;*
*ambient temperature **35°C;** Refrigerant R407C; glycol 20%.*
***NB:*** *low noise operating mode is maintained up to an ambient temperature of **35°C***

## TECHNICAL DATA

### ARAC - Basic version ("cooling only")

BASIC VERSION

| MODEL | | 0574A | 0644A | 0744A | 0964A | 1084A | 1204A |
|---|---|---|---|---|---|---|---|
| C | | | | | | | |
| Power Supply | V/ph/Hz | 400/3+N/50 | 400/3+N/50 | 400/3+N/50 | 400/3+N/50 | 400/3+N/50 | 400/3+N/50 |
| Nominal cooling capacity (1) | kW | 118 | 135 | 165 | 190 | 230 | 260 |
| Cooling operation input power (1) | kW | 42 | 49 | 54 | 73 | 83 | 95 |
| E.E.R. (2) | kW/kW | 3,10 | 2,98 | 3,38 | 2,83 | 3,02 | 2,95 |
| Fan speed (1) | r.p.m. | 880 | 880 | 880 | 880 | 880 | 880 |
| Air flow (1) | $m^3/h$ | 44420 | 44420 | 68120 | 68120 | 89000 | 89000 |

### ARAC - Low Noise Version

LOW NOISE

### TECHNICAL DATA

| MODEL | | 0574A | 0644A | 0744A | 0964A | 1084A | 1204A |
|---|---|---|---|---|---|---|---|
| ARAC | | | | | | | |
| Nominal cooling capacity (1) | kW | 112 | 128 | 158 | 180 | 219 | 245 |
| Fan speed (1) | r.p.m. | 660 | 660 | 660 | 660 | 660 | 660 |
| E.E.R. (2) | kW/kW | 2,71 | 2,57 | 2,98 | 2,43 | 2,62 | 2,51 |
| Air flow (1) | $m^3/h$ | 34540 | 34540 | 53350 | 53350 | 69240 | 69240 |

### ARAH – Heat Pump, Basic version

HEAT PUMP

### TECHNICAL DATA

| MODEL | | 0574A | 0644A | 0744A | 0964A | 1084A | 1204A |
|---|---|---|---|---|---|---|---|
| ARAH | | | | | | | |
| Nominal heating capacity (3) | kW | 129 | 141 | 179 | 220 | 255 | 285 |
| Heating operation input power (3) | kW | 38 | 41 | 63,4 | 78 | 83 | 85 |
| COP (2) | kW/kW | 3,75 | 3,76 | 3,09 | 3,03 | 3,37 | 3,66 |
| Fan speed (3) | r.p.m. | 880 | 880 | 880 | 880 | 880 | 880 |
| Air flow (3) | $m^3/h$ | 44980 | 44980 | 68830 | 68830 | 90110 | 90100 |

### ARAH – Heat pump, Low Noise version

H.P. - LOW NOISE

### TECHNICAL DATA

| MODEL | | 0574A | 0644A | 0744A | 0964A | 1084A | 1204A |
|---|---|---|---|---|---|---|---|
| ARAH | | | | | | | |
| Nominal heating capacity (3) | kW | 123,8 | 135,4 | 167 | 202,6 | 232,4 | 254 |
| Fan speed (3) | r.p.m. | 660 | 660 | 660 | 660 | 660 | 660 |
| COP (2) | kW/kW | 3,65 | 3,62 | 3,12 | 3,10 | 3,39 | 3,5 |
| Air flow (3) | $m^3/h$ | 35000 | 35000 | 52000 | 52000 | 67000 | 67000 |

**(1)** Data rifer to nominal conditions: water 12 / 7 °C, ambient at 35 °C, refrigerant R407C.
**(2) Data refer only to compressors (without pumps and fans), at nominal conditions.**
**(3)** Data rifer to nominal conditions: water 40 / 45°C, outdoor temperature dry bulb: 7°C, wet bulb: 6°C, refrigerant R407C.

*ARAF - Free-Cooling Series*

## TECHNICAL DATA

| MODEL | ARAF | 0574A | 0644A | 0744A | 0964A | 1084A | 1204A |
|---|---|---|---|---|---|---|---|
| Power Supply | V/ph/Hz | 400/3+N/50 | 400/3+N/50 | 400/3+N/50 | 400/3+N/50 | 400/3+N/50 | 400/3+N/50 |
| Free-cooling nominal capacity (1) | kW | 82 | 85 | 146 | 152 | 196 | 202 |
| Free-cooling input power (1) | kW | 5,7 | 6,3 | 8,4 | 7,9 | 9,9 | 10 |
| E.E.R. in Free-cooling (1) (nominal capacity / input power) | kW/kW | 14,6 | 13,8 | 15,5 | 19 | 19,7 | 20 |
| Free-Cooling :Fan Speed (1) | r.p.m. | 880 | 880 | 880 | 880 | 880 | 880 |
| Free-Cooling: Air flow (1) | $m^3/h$ | 39500 | 39500 | 61600 | 61600 | 79300 | 73000 |
| Nominal mechanical cooling capacity (2) | kW | 115 | 132 | 161 | 185 | 224 | 253 |
| E.E.R. in mechanical cooling (3) (nominal capacity / input power) | kW/kW | 2,9 | 2,8 | 3,2 | 2,7 | 2,8 | 2,7 |
| Mechanical cooling: fan speed (2) | r.p.m. | 880 | 880 | 880 | 880 | 880 | 880 |

*ARAF – Low Noise Version*

## TECHNICAL DATA

LOW NOISE

| MODEL | ARAF | 0574A | 0644A | 0744A | 0964A | 1084A | 1204A |
|---|---|---|---|---|---|---|---|
| Power Supply | V/ph/Hz | 400/3+N/50 | 400/3+N/50 | 400/3+N/50 | 400/3+N/50 | 400/3+N/50 | 400/3+N/50 |
| Free-cooling nominal capacity (1) | kW | 68 | 70 | 123 | 127 | 163 | 166 |
| Free-cooling input power (1) | kW | 4,3 | 5,1 | 6,5 | 6 | 7,4 | 7,6 |
| E.E.R. in Free-cooling (1) (nominal capacity / input power) | kW/kW | 16.3 | 15,7 | 16,9 | 20 | 21,6 | 23 |
| Free-Cooling :Fan Speed (1) | r.p.m. | 660 | 660 | 660 | 660 | 660 | 660 |
| Free-Cooling: Air flow (1) | $m^3/h$ | 29800 | 29800 | 46900 | 46900 | 54500 | 54500 |
| Nominal mechanical cooling capacity (2) | kW | 108 | 122 | 157 | 172 | 210 | 233 |
| E.E.R. in mechanical cooling (3) (nominal capacity / input power) | kW/kW | 2,5 | 2,4 | 2,7 | 2,2 | 2,4 | 2,2 |
| Mechanical cooling: fan speed (2) | r.p.m. | 660 | 660 | 660 | 660 | 660 | 660 |

*(1) In nominal conditions: water inlet: 15°C; ambient +5°C; 20% glycol; refrigerant R407C.*
*(2) Data refer to nominal conditions: water at 12/7°C; ambient at 35°C; **20% glycol**; refrigerant R407C.*
*(3) **Data refer only to compressors,** at nominal conditions: water at 12/7°C; ambient at 35°C; **20% glycol**; refrigerant R407C.*

# PROBLEM SOLVING

## GUIDE TO PROBLEM SOLVING

| PROBLEM | POSSIBLE CAUSE | CHECK/CORRECTIVE ACTION |
|---|---|---|
| **THE CHILLER DOES NOT WORK** | The electrical panel has no power supply | Check for mains power |
| | | Check that the main switch is closed |
| | The microprocessor control circuit board has no power supply | Check that the IM8 automatic auxiliary circuit switch is armed |
| | | Check that the fuses are active |
| | The microprocessor control has power supply but does not start the unit. | Check for alarm conditions |
| | | |
| **HIGH OUTPUT PRESSURE OR INTERVENTION OF HIGH PRESSURE PRESSOSTAT** | Airflow to the condenser is insufficient or the intake temperature is too high. | Check for any re-circulation of condensation air and that the distances given in the section on “Positioning the chiller” are respected |
| | | Check that the temperature of the condensation air is within the unit’s function limits |
| | | Check that the coils / metal filters are not dirty. |
| | | Check the fan rotation direction |
| | The condensation pressure control system is not efficient | Check the setting and correct function of the fan speed regulator. |
| | One or more fans is not working | Check for intervention of fan protection |
| | | Re-set or change the faulty fans |
| | There is air in the circuit, shown by bubbles despite over-cooling | Evacuate and re-charge the circuit |
| | There is too much refrigerant in the circuit; the condenser is partially flooded. | Excessive cooling of the liquid at the condenser output; remove some refrigerant from the circuit. |
| | Dirty condenser or metal filters | Remove obstructing material (leaves, paper, etc.) |

| PROBLEM | POSSIBLE CAUSE | CHECK/CORRECTIVE ACTION |
|---|---|---|
| **HIGH OUTPUT PRESSURE OR INTERVENTION OF HIGH PRESSURE PRESSOSTAT** | High intake pressure | Check the chilled water return temperature and the control set values |
| | | |
| **LOW OUTPUT PRESSURE OR INTERVENTION OF LOW PRESSURE PRESSOSTAT** | The thermostatic valve is not set or defective | Check that the superheating of the thermostatic valve is correct (approx. 5°C) |
| | | Check that the bulb has not lost pressure |
| | The filter drier cartridge is dirty | Check whether the filter dryer cartridge needs to be changed; the temperature differential before and after the filter must be less than 2°C |
| | With cold outside temperatures, the LP pressostat intervenes before the cooling circuit is stable | Set the LP pressostat inhibition time on start-up to 120 seconds |
| | Insufficient refrigerant charge | Check for leaks and re-charge until supercooling of the liquid at the condenser output is 3-5°C. |
| | Insufficient water flow (wide difference between chilled water intake and output temperatures). | Check the installation specifications and the pump characteristics: Check for leaks from piping. |
| | | |
| **THE ANTI-FREEZE PROTECTION CUTS IN** | The chilled water output temperature is too low. | Check that the water flow is sufficient and that the difference between intake and output temperature is not too high |
| | The setting of the antifreeze alarm or antifreeze sensor is incorrect. | Check the alarm setting on the control |

| PROBLEM | POSSIBLE CAUSE | CHECK/CORRECTIVE ACTION |
|---|---|---|
| **THE COMPRESSOR DOES NOT WORK WHEN CALLED BY THE THERMOSTAT** | One of the unit's safety devices has intervened | Check for alarms on the user terminal display |
| | Short circuit protection has intervened | Check the cause of the short circuit – restart the main automatic switch. |
| | The LP pressostat or anti-freeze protection has intervened | See 'Low output pressure or intervention of low pressure pressostat' or 'The anti-freeze protection cuts in' |
| | The control system is not giving a correct system | Check the control system |
| | The flow gauge does not give the compressor start-up command | Check the water flow and the flow gauge and pump function |
| | | |
| **THE COMPRESSOR INTERNAL PROTECTION CUTS IN**<br>N.B. Before starting the compressor, check compressor winding resistance and continuity | A phase is missing | Check the compressor's electrical connections |
| | The motor is overloaded | Check that the power supply is not too high or too low |
| | The rotor is blocked | Change the compressor |
| | | |
| **THE COMPRESSOR IS NOISY** | Liquid return to the compressor | Check the function and superheating of the expansion valve |
| | The compressor is damaged | Call the nearest service centre for repair or replacement of the compressor |
| | | |
| **LOW OUTPUT PRESSURE** | The condensation pressure control system is not efficient | Check the function of the fan speed regulators |
| | | Check the function of the air temperature sensor |
| | The chiller is functioning with external air temperatures which are too low | Check that the unit is functioning within the temperature limits given in this manual |
| | | |
| **HIGH INTAKE PRESSURE** | Chilled water return temperature is higher than normal | Check that the unit is functioning within the temperature limits given in this manual |
| | Liquid refrigerant return to the compressor | Check the function of the expansion valve and the correct positioning of the bulb |
| | | Check that superheating of the thermostatic valve is correct (approx. 5°C) |

# REFRIGERANT CHARGE

Units are pre-charged in the factory and do not need re-charging unless there have been problems during transport or installation or the safety valve has intervened. In the event that it is necessary to adjust the charge, follow the instructions below. If the circuit has been drained for the replacement of components, a vacuum must be created in the circuit before re-charging.

**CREATING A VACUUM IN THE CIRCUIT**

Connect the vacuum pump to the valves in the compressor housing and take the vacuum in the system to 0.3 mbar; remember that the vacuum must not be created too quickly (at least 120 minutes). When the vacuum level is reached, maintain it for at least 60 minutes.

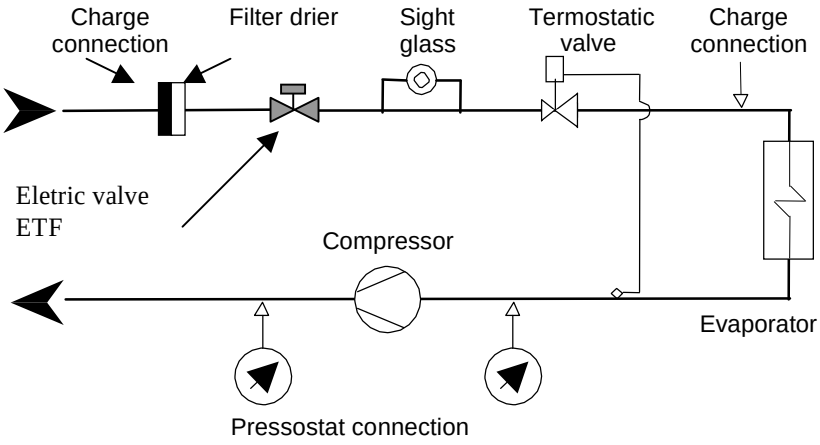


*Refrigerant charge connections*

**REFRIGERANT CHARGE**

The system must be charged with liquid refrigerant fluid via the needle valve between the thermostatic expansion valve and the evaporator until there are no bubbles in the flow sight glass. The charge must be done under normal conditions and with an output pressure of 16-18 bar.
Check the quantity of refrigerant on the data plate and verify that liquid supercooling at the thermostatic intake is 3 to 5°C less than the condensation temperature on the manometer scale and that the superheating is between 4 and 7°C
**NOTE**: when charging with R407C check the liquid supercooling value (3 to 5°C) and not the sight glass.

## IMPORTANT WARNINGS

Check the type of refrigerant used on the unit data plate and on the compressor data plate. If it is necessary to top up the oil, use only the oils listed below:

| Refrigerant | Recommended oil |
|---|---|
| R22 (Mineral oil) | Maneurop 160P - Mineral / ISO 32 |
| R407C (POE) | Maneurop 160SZ |

**Do not use the compressor to create a vacuum in the system.**

When charging the unit, use refrigerant in the liquid state.

## BLEEDING THE WATER CIRCUIT

If there is air in the water circuit it can be bled using the valves:
- on the chilled water intake connection
- on the optional reservoir tank

During the winter shutdown (cooling-only versions) or for special maintenance, it may be necessary to drain the water circuit.
To perform this operation valves have been placed:
- on the chilled water outlet connection;
- on the bottom of the reservoir tank;

Plug for the discharge of water that has accumulated inside the pump (see diagram).

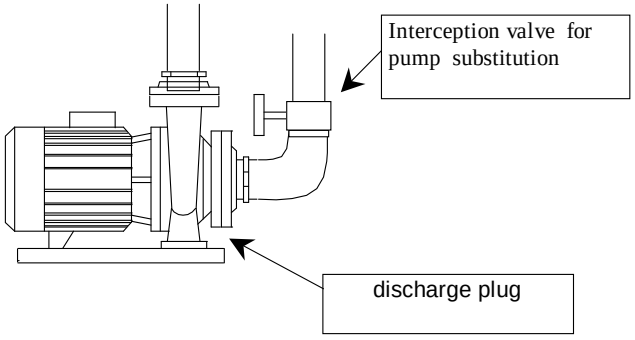


The chilled water temperature should be set to the maximum possible; this will cause the microprocessor control to switch on the pump by itself, thus facilitating the draining of the system.

## MAINTENANCE AND CLEANING

All maintenance and cleaning operations must be carried out safely, following the instructions in this manual.
To ensure the correct functioning of the unit it is advisable to check regularly that the heat exchanger coils, the metal filters and the protection grilles are clean.

**IMPORTANT WARNING**

**Disconnect the unit from the electric power supply before accessing internal components.**

**All service and maintenance operations which require access to the internal components of the unit while it is operating must be carried out by qualified experts who are aware of the necessary precautions to take.**

## CHANGING THE PROTECTION GRILLES

The condenser coils can be fitted with protection grilles on the intake. To clean or change these grilles:

- remove posts **S1** screwed
- to the structure of the unit.
- remove the grilles **F**;

To replace the grilles, do this in reverse.



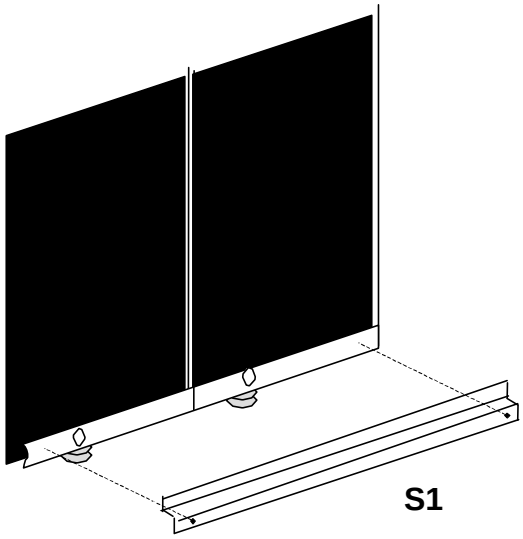


**IMPORTANT**: when removing the grilles, be careful of the **sharp edges** on the surface of the coils.

## CHANGING THE AIR FILTERS

The condenser and free-cooling coils can be protected by metal filters on the intake side of the coils.
To clean or replace the filters the upper side panels of the unit must be removed.



**IMPORTANT**: when removing the metal filters be very careful of the very sharp edges of the coil fins.

Then proceed as follows:

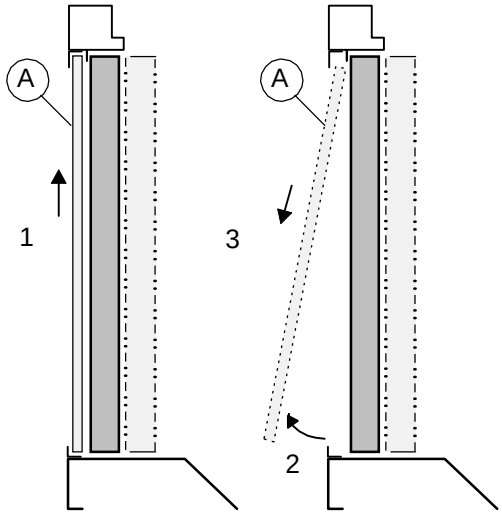


**Front filters A:**
1. Lift the filter
2. Rotate it until it is freed from the metal bottom bracket
3. Remove the filter.

ARAC/H0574-0644

**Peso Massimo 1554 Kg**
**Maxi Weight 1554 Kg**
**Poids Maxi 1554 Kg**
**Maxi Gewicht 1554 KG**

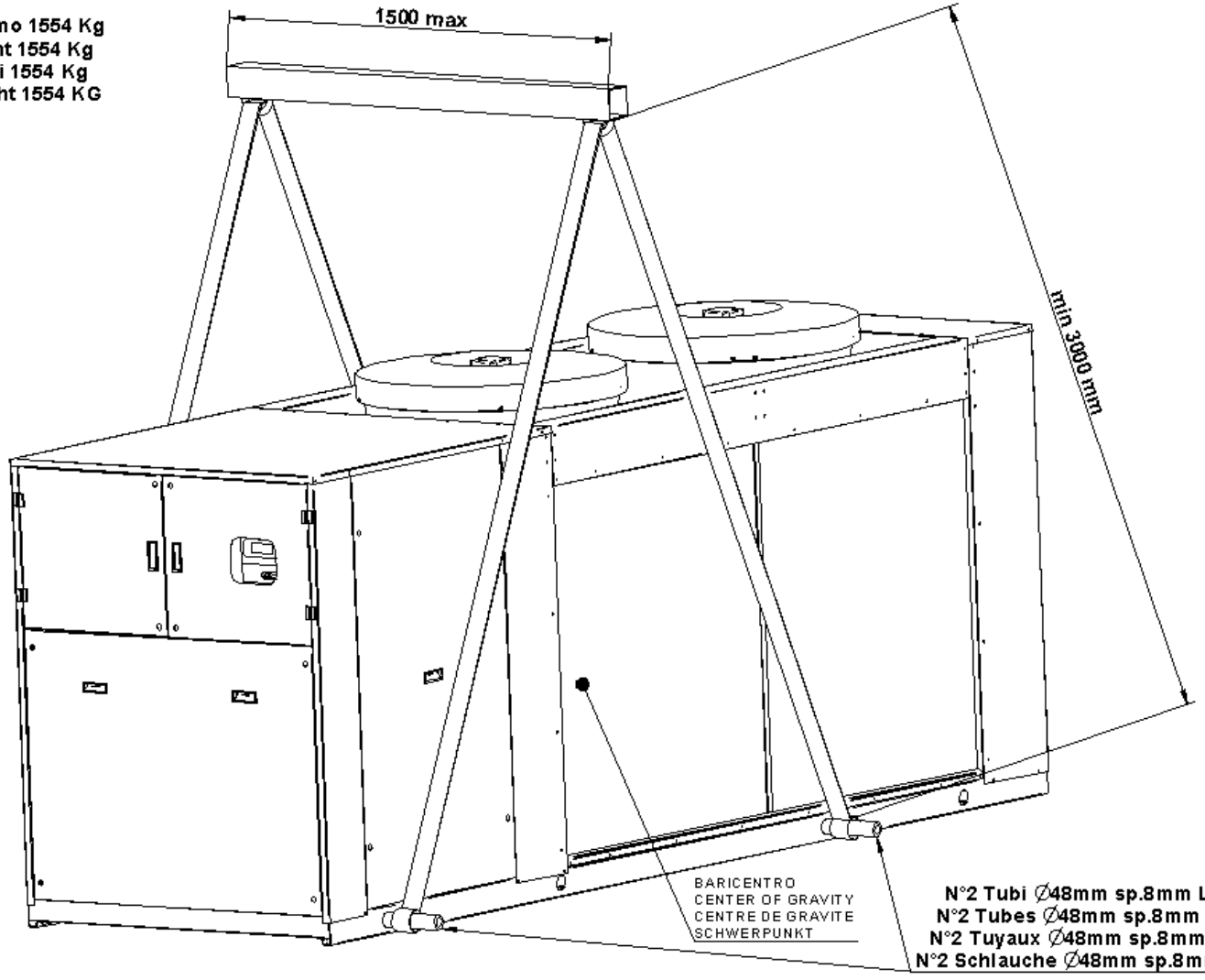


**N°2 Tubi Ø48mm sp.8mm L=1600mm**
**N°2 Tubes Ø48mm sp.8mm L=1600mm**
**N°2 Tuyaux Ø48mm sp.8mm L=1600mm**
**N°2 Schlauche Ø48mm sp.8mm L=1600mm**

DIRI166X2X /

**ARAC/H0744-0964**

**Peso Massimo 2321 Kg**
**Maxi Weight 2321 Kg**
**Poids Maxi 2321 Kg**
**Maxi Gewicht 2321 Kg**

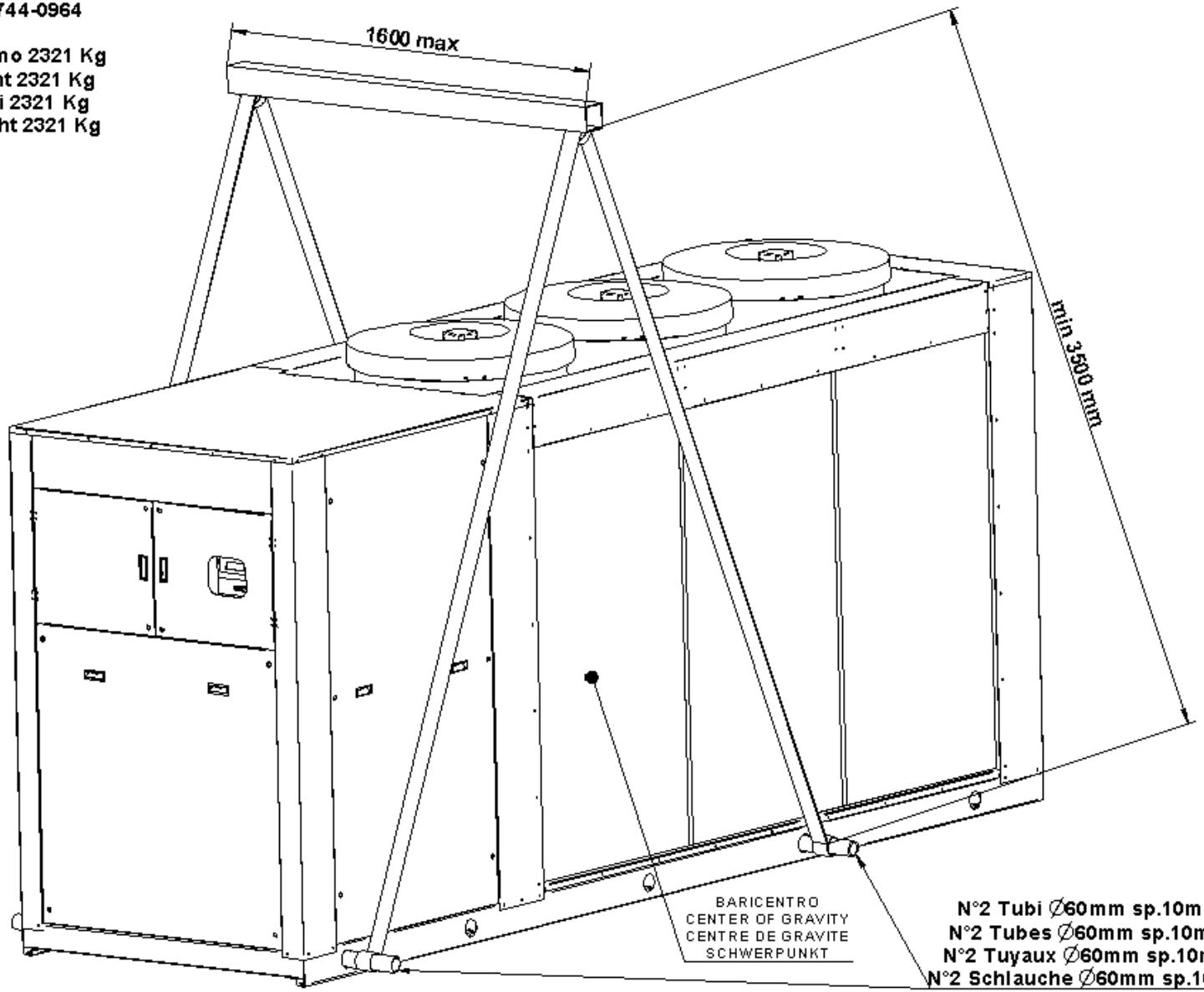


**N°2 Tubi ∅60mm sp.10mm L=1800mm**
**N°2 Tubes ∅60mm sp.10mm L=1800mm**
**N°2 Tuyaux ∅60mm sp.10mm L=1800mm**
**N°2 Schlauche ∅60mm sp.10mm L=1800mm**

DIRI167X2X /

**ARAC/H1084-1204**

**Peso Massimo 2648 Kg**
**Maxi Weight 2648 Kg**
**Poids Maxi 2648 Kg**
**Maxi Gewicht 2648 Kg**

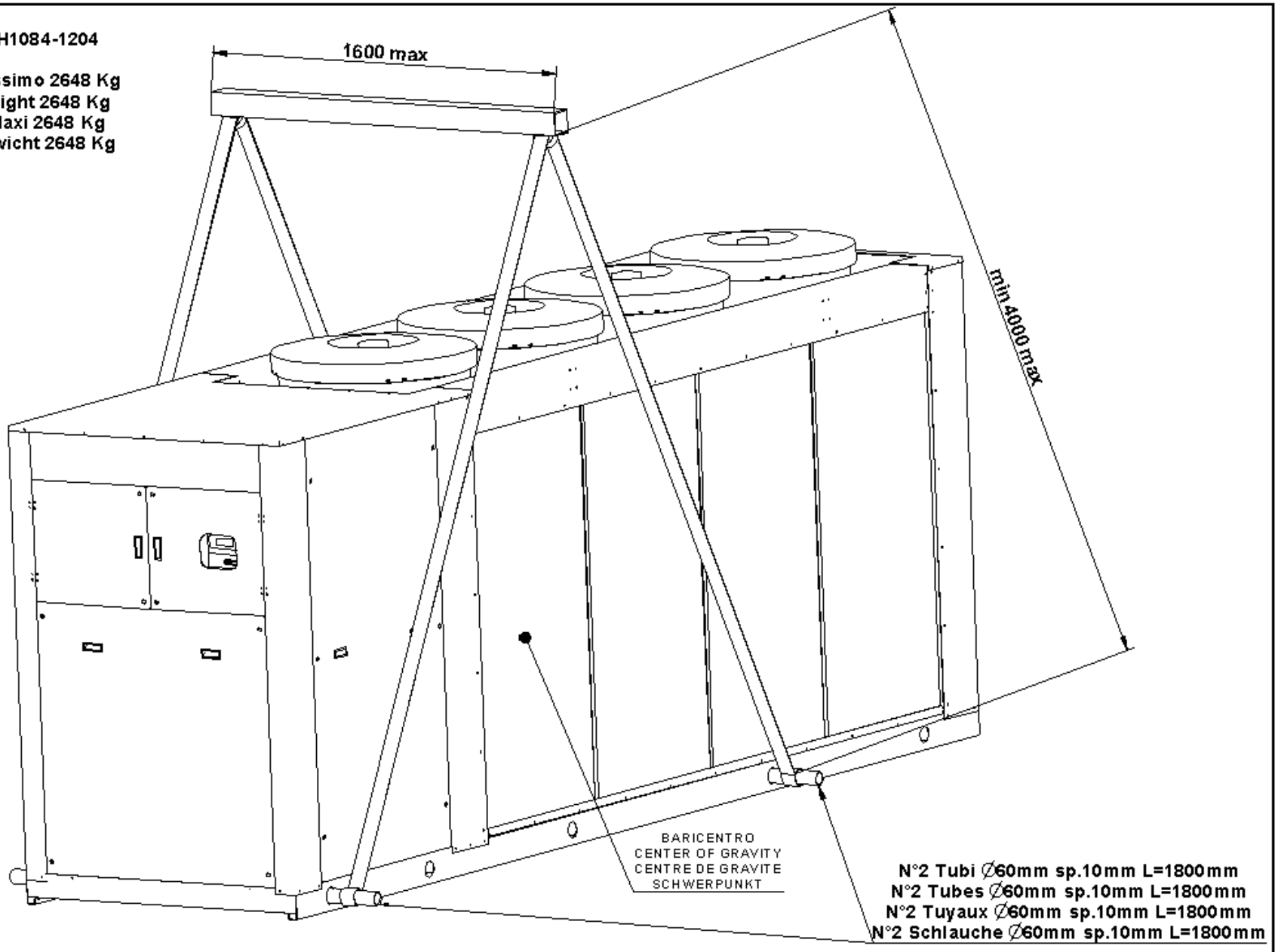


**N°2 Tubi ∅60mm sp.10mm L=1800mm**
**N°2 Tubes ∅60mm sp.10mm L=1800mm**
**N°2 Tuyaux ∅60mm sp.10mm L=1800mm**
**N°2 Schlauche ∅60mm sp.10mm L=1800mm**

DIRI168X2X /

**ARAF0574-0644**

**Peso Massimo 1734 Kg**
**Maxi Weight 1734 Kg**
**Poids Maxi 1734 Kg**
**Maxi Gewicht 1734 KG**

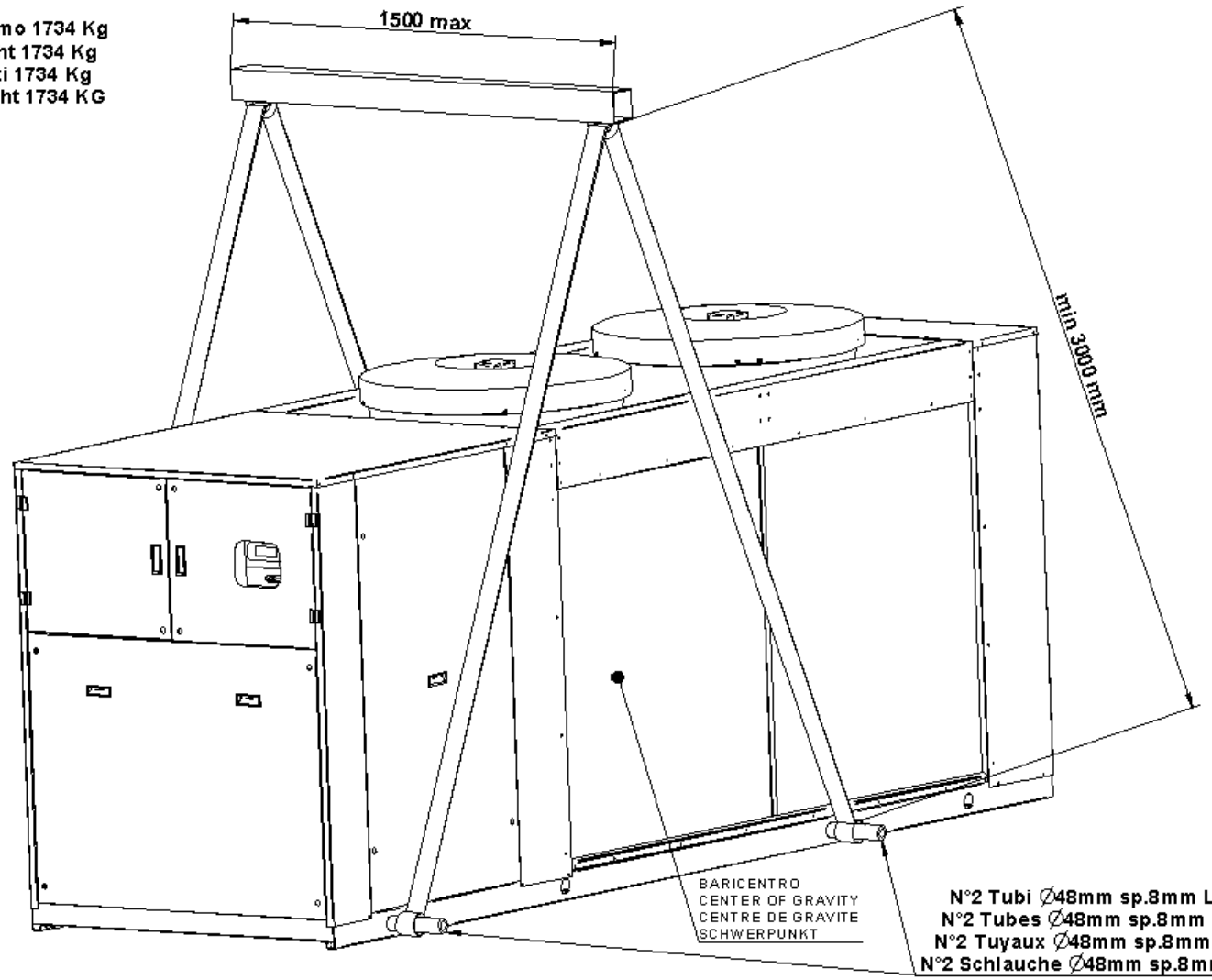


**N°2 Tubi Ø48mm sp.8mm L=1600mm**
**N°2 Tubes Ø48mm sp.8mm L=1600mm**
**N°2 Tuyaux Ø48mm sp.8mm L=1600mm**
**N°2 Schlauche Ø48mm sp.8mm L=1600mm**

DIRI180X2X. /

**ARAF0744-0964**

**Peso Massimo 2731 Kg**
**Maxi Weight 2731 Kg**
**Poids Maxi 2731 Kg**
**Maxi Gewicht 2731 Kg**

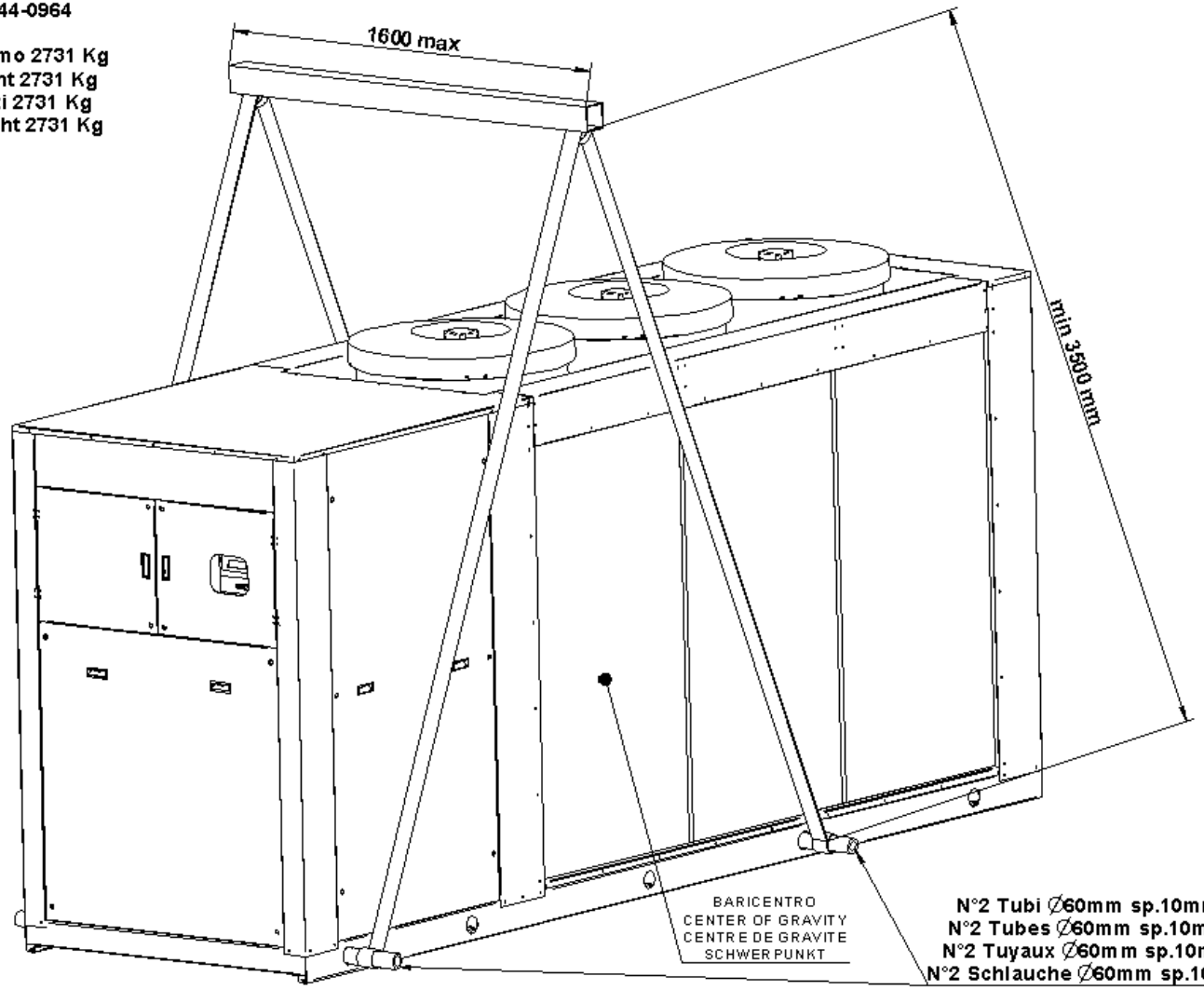


**N°2 Tubi ∅60mm sp.10mm L=1800mm**
**N°2 Tubes ∅60mm sp.10mm L=1800mm**
**N°2 Tuyaux ∅60mm sp.10mm L=1800mm**
**N°2 Schlauche ∅60mm sp.10mm L=1800mm**

DIRI181X2X. /

**ARAF1084-1204**

**Peso Massimo 3148 Kg**
**Maxi Weight 3148 Kg**
**Poids Maxi 3148 Kg**
**Maxi Gewicht 3148 Kg**

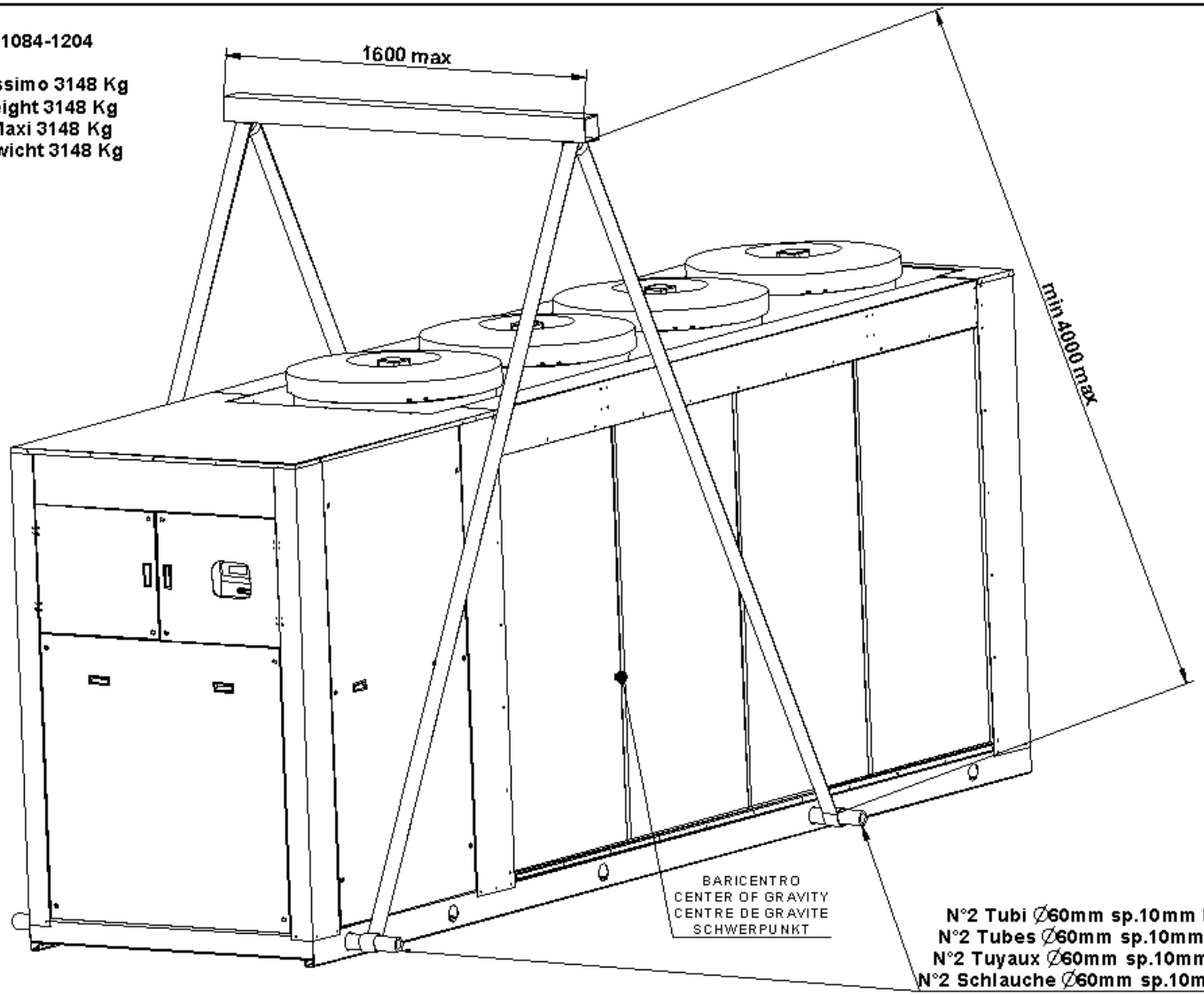


**N°2 Tubi ∅60mm sp.10mm L=1800mm**
**N°2 Tubes ∅60mm sp.10mm L=1800mm**
**N°2 Tuyaux ∅60mm sp.10mm L=1800mm**
**N°2 Schlauche ∅60mm sp.10mm L=1800mm**

DIRI182X2X. /

**UNIFLAIR S.p.A.**
Legal and Aministrative Headquarters: Viale della Tecnica 2, 35026
Conselve (PD) Italy
Tel +39 049 5388211 Fax +39 049 5388212 - uniflair.com
info@uniflair.com
P.IVA 02160760282 C.C.I.A.A. di PD R.E.A. 212586 del 21/04/1988 - R.I.N. 02160760282 M. PD004505

Share capital € 19.550.000