Air cooled chillers

POWERCIAT LX R407C

Screw compressors
CIAT direct expansion
shell and tubes evaporator
Hydraulic pack versions
"Plug and Cool"
H.P.S. equipment (High Power System)



Cooling capacity : 230 to 1100 kW

Cooling **Hydraulic module** **Heat recovery**

EUROVENT CERTIFIED PERFORMANCE

ENVIRONMENTALLY FRIENDLY HFC R407C PROTECTION DE L'ENVIRONNEMENT

USE

The new generation of **POWERCIAT LX water chillers** offers an optimal solution to all the refrigeration applications encountered in the air conditioning or industrial process.

This range is designed with the latest generation of components : accessible hermetic twin screw compressors, modulating capacity control, communicating control and management by Xtra Connect microprocessor, components optimized for the ecological refrigerant HFC 407C.

This range is also proposed with an integrated hydraulic module : **POWERCIAT LXH**. This one includes all the elements required for a right operation of the unit : buffer tank, expansion vessel, single or twin pump, air vent , pressure relief valves , shut off valves , manometers...

A range with compact hydraulic equipment (without buffer tank) is also available : **POWERCIAT LXC.**

Units in accordance with EN 60-204 - EN 378-2 regulations and directives :
- Machines (98/37 CEE) modified
- CEM (89/336 CEE) modified 92/31 CEE - 93/68 CEE
- Low voltage (73/23 CEE) modified 92/31 CEE - 93/68 CEE
- DESP 97/23 CEE

→ **LX - LXH - LXC**
group 2 sizes 1200Z (HPS) to 1850Z (HPS)
group 3 sizes 2150Z (HPS) to 2800Z (HPS)
group 4 sizes 3050Z HPS to 4200Z HPS

RANGE

POWERCIAT LX - LXH - LXC

2 compressors, 2 refrigerant circuits :

12 models : 1200Z, 1200Z HPS, 1500Z, 1500Z HPS, 1850Z, 1850Z HPS, 2150Z, 2150Z HPS, 2500Z, 2500Z HPS, 2800Z, 2800Z HPS

3 compressors, 3 refrigerant circuits

4 models : 3050Z HPS, 3400Z HPS, 3750Z HPS, 4200Z HPS

■ CONFIGURATION

a - **HIGH PERFORMANCE** version
Ventilation 905 rpm

b - **LOW NOISE** version (LN)
Ventilation 715 rpm + compressors sound insulation

c - **XTRA LOW NOISE** version (XLN)
Specific mounting for 715 rpm fans + compressors sound insulation

POWERCIAT LX R407C

DESCRIPTION

POWERCIAT LX serie

Compressors

- Accessible hermetic twin screw type
- Optimized profile of rotors ensuring a high efficiency
- Electrical motor incorporated with **part-winding starting**
- Motor integral electronic protection
- Control of the phases balance and rotation direction
- Integrated overpressure valve
- Discharge temperature control
- Lubrication under controlled pressure
- 3-stage integrated oil separator
- Crankcase heater
- Suction filter
- Discharge valve
- Slide for modulating capacity control
- Compressors fitted on anti-vibration mounts

Evaporator

- Direct expansion shell and tube type
- High performance copper tubes bundle
- Steel shell
- Corrosion resistant baffles
- Thermal insulation by cellular foam with UV resistant polyurethane film

Air cooled condenser

- Copper tubes coils, aluminium fins
- Direct drive propeller fans
- Rotation speed : **905 or 715 rpm**
- 3 phase electrical motors, IP 54
- Standardized protection grilles

HPS (High Power system) on models LX/LXH/LXC...HPS

- The HPS system allows to increase cooling capacity, improves the performance coefficients (EER) of your installation, particulary in part load, and ensures therefore an optimal operation of POWERCIAT during all the year.

Refrigerant accessories

- Filter dryers with rechargeable cartridges
- Liquid sight glasses
- Solenoid valves on liquid refrigerant lines
- Thermostatic expansion valves

Safety and regulation devices

- HP/LP pressure sensors
- Low and high pressure safety valves
- Chilled water control sensor (inlet and outlet)
- External temperature sensor
- Evaporator antifreeze sensor
- Compressors discharge sensor
- Evaporator water flow switch

Electrical panel

- IP 44
- Electrical supply 400 V - 3 ph. - 50 Hz + earth (-5% / +4%)
- Wires numbering and electrical components referencing
- Main fuse disconnect safety switch with external handle
- Transformer for control circuit
- Compressors motors contactors
- Fans motors contactors
- Fuse-protected compressor motors
- Fans motors protection
- Main electrical ground
- Phase monitor (reversal, loss, over and under voltage)

Electronic control with microprocessor Xtra connect

ensuring the following main functions :

- 2 remote switchable set points
- Chilled water temperature control
- Possibility of water temperature variation as a function of the outside temperature (water law)
- Low temperature energy storage control
- Condensing pressure control
- Compressors discharge temperature control
- Compressors anti-short cycle control
- Control and optimisation of operating parameters
- Counting and balancing of compressors, pumps operating times
- Automaticity control
- LCD display panel, 2 lines of 20 characters allowing :
  - parametering of the unit
  - direct reading of all information : settings, water inlet/outlet temperatures, outside temperature, HP/LP pressures, unit operating status...
  - Faults control with memorization of the last 9 faults and operating logbook when those faults occur
  - Weekly management of the unit
  - Unit general fault display on terminals
  - Automaticity control on terminals
  - RS 485 output for bus connection with centralized Building Management System.

Capacity control

- Modulating capacity control :

- from 25 to 100 % (sizes 1200Z (HPS) to 2800Z (HPS))

- from 17 to 100 % (sizes 3050Z HPS to 4200Z HPS)

Frame and casing

- Frame in RAL 7035 and 7024 painted metal sheet
- Casing in RAL 7035 and 7024 lacquered metal sheet

Air cooled chillers

POWERCIAT LXH serie

The design of **POWERCIAT LXH units** is identical to the one of POWERCIAT LX

These units integrate the **complete hydraulic** equipment for standard installation :

- 1 insulated buffer tank , capacity : 950 litres
- 1 monocellular centrifugal hydraulic pump (**single** or **twin** pump)
- 1 expansion vessel (80 litres)
- 1 automatic air vent
- 1 manual air vent
- 1 safety valve calibrated at 4 bars
- A drain hole
- 2 shut off valves for the pump
- 1 set of manometers
- Contactors, protection devices and control for pumps inside the unit electrical panel.

POWERCIAT LXC serie

The design of **POWERCIAT LXC units** is identical to the one of POWERCIAT LX

These units integrate the **a compact hydraulic equipment**

- 1 monocellular centrifugal hydraulic pump (single or twin pump)
- 1 expansion vessel (80 liters)
- 1 automatic air vent
- 1 manual air vent
- 1 safety valve calibrated at 4 bars
- A drain hole
- 2 shut off valves for the pump
- 1 set of manometers
- Contactors, protection devices and control for pumps inside the unit electrical panel.

OPTIONS

- **LOW NOISE (LN)** version : ABS phonic insulation casing with sound proof material + 715 rpm fans
- **XTRA LOW NOISE (XLN)** version : ABS sound insulation casing with soundproof material + specific mounting for 715 rpm fans
- Compressors suction valves
- Evaporator antifreeze protection (LX serie)
- Evaporator antifreeze protection + piping + hydraulic equipment (LXH - LXC series)
- Condenser coil treatment :

- polyurethane coated fins

- polual blygold coating

- Anti-vibration mounts
- Evaporator flexible connections
- Remote control box
- Voltage free relay card
- Heat recovery with brazed plates desuperheaters (1 per refrigerant circuit)
- Low temperature glycol water
- Electronic expansion valve
- Soft start
- Management of several units MULTICONNECT
- Optimised high pressure
- Fans speed variator
- LonWorks gateway
- Container handling equipment
- Shackles



POWERCIAT LX serie

VERSION WITH HYDRAULIC EQUIPMENT

LXH - LXC series

The “ALL INTEGRATED” solution

The PLUG and COOL solution offered by POWERCIAT LXH - LXC

The hydraulic equipment integrates all the components necessary for the correct operation of the installation :

- 950 litres insulated buffer tank (**LXH only**)
- 80 litres expansion vessel
- Large choice of single or twin pumps for high head pressure **(1)**
- Manometers with shut off valves
- Pressure relief valves (calibrated at 4 bars)
- Drain circuit
- Manual and automatic air vent
- Control of the assembly
- Antifreeze protection (optional)

The hydraulic equipment, whose components have been selected in an optimal way, mounted and tested in factory, makes the installation of units easy and economical.

The preparation/commissioning times and the space required on site are therefore perfectly optimised.

(1) Our pumps are designed for operation on a closed water loop (low NPSH). For other applications, consult us (open water circuit, important intake height, etc).

Hydraulic equipment LXH serie



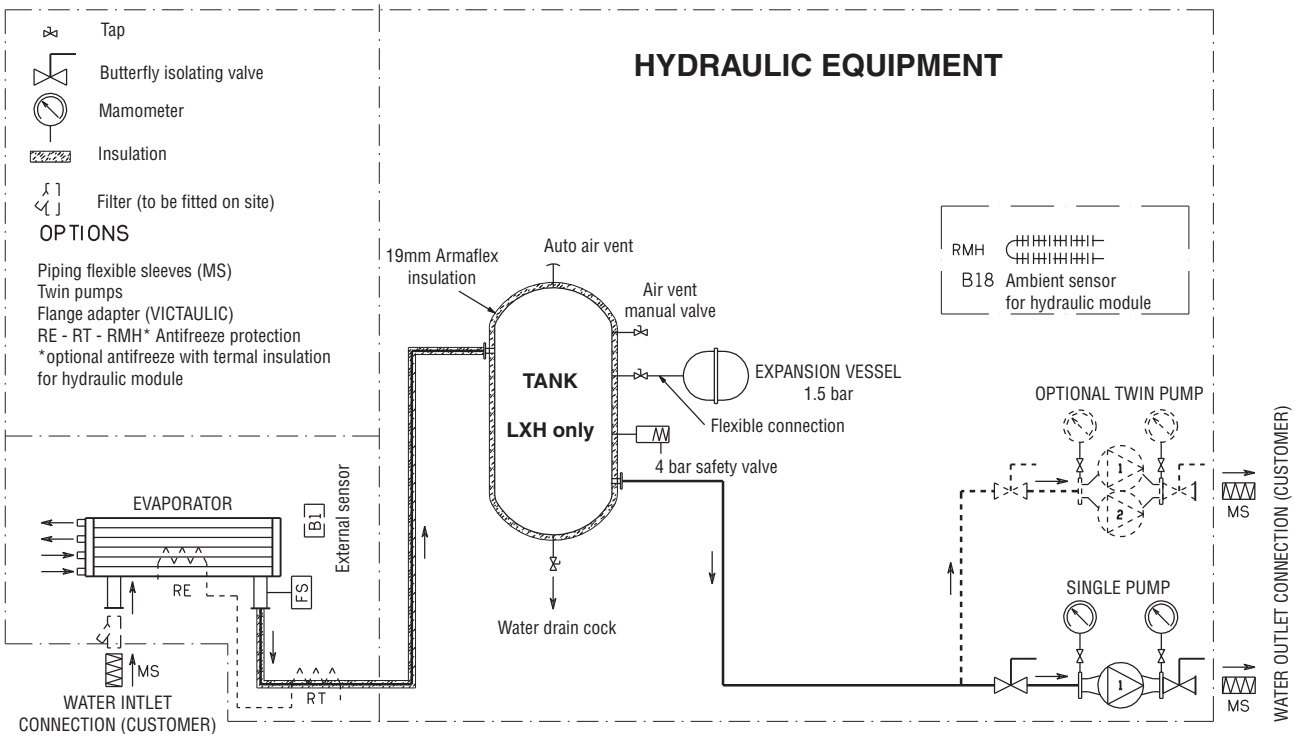

STANDARD EQUIPMENT / AVAILABLE OPTIONS

	POWERCIAT	1200Z	1200Z HPS	1500Z	1500Z HPS	1850Z	1850Z HPS	2150Z	2150Z HPS	2500Z	2500Z HPS	2800Z	2800Z HPS
Standard	Refrigerant R407C	●	●	●	●	●	●	●	●	●	●	●	●
	2 refrigerant circuits	●	●	●	●	●	●	●	●	●	●	●	●
	Main safety switch	●	●	●	●	●	●	●	●	●	●	●	●
	Control circuit transformer	●	●	●	●	●	●	●	●	●	●	●	●
	Wiring numbering	●	●	●	●	●	●	●	●	●	●	●	●
	All-season operation (Min. outdoor temp.: -15°C)	●	●	●	●	●	●	●	●	●	●	●	●
	RS 485 communication interface	●	●	●	●	●	●	●	●	●	●	●	●
	Compressors Part Winding starting	●	●	●	●	●	●	●	●	●	●	●	●
	Phase monitor (reversal, loss, over and under voltage)	●	●	●	●	●	●	●	●	●	●	●	●
Options	LOW NOISE (LN) version	●	●	●	●	●	●	●	●	●	●	●	●
	XTRA LOW NOISE (XLN) version	▲	▲	▲	▲	▲	▲	▲	▲	▲	▲	▲	▲
	Compressors isolating suction valves	▲	▲	▲	▲	▲	▲	▲	▲	▲	▲	▲	▲
	Antifreeze protection	▲	▲	▲	▲	▲	▲	▲	▲	▲	▲	▲	▲
	Coil treatment (Blygold or polyurethane)	▲	▲	▲	▲	▲	▲	▲	▲	▲	▲	▲	▲
	Single pump (LXH - LXC versions)	▲	▲	▲	▲	▲	▲	▲	▲	▲	▲	▲	▲
	Twin pump (LXH - LXC versions)	▲	▲	▲	▲	▲	▲	▲	▲	▲	▲	▲	▲
	Anti-vibration mounts	▲	▲	▲	▲	▲	▲	▲	▲	▲	▲	▲	▲
	Hydraulic connectors	▲	▲	▲	▲	▲	▲	▲	▲	▲	▲	▲	▲
	Remote control box (remote console)	▲	▲	▲	▲	▲	▲	▲	▲	▲	▲	▲	▲
	Dry-contact relay board	▲	▲	▲	▲	▲	▲	▲	▲	▲	▲	▲	▲
	Electronic expansion valve	▲	▲	▲	▲	▲	▲	▲	▲	▲	▲	▲	▲
	Low temperature glycol water from 0 °C to - 8 °C	▲	▲	▲	▲	▲	▲	▲	▲	▲	▲	▲	▲
	Desuperheaters	▲	▲	▲	▲	▲	▲	▲	▲	▲	▲	▲	▲
	Soft Start	▲	▲	▲	▲	▲	▲	▲	▲	▲	▲	▲	▲
	Management of several units - MULTICONNECT	▲	▲	▲	▲	▲	▲	▲	▲	▲	▲	▲	▲
	Optimised high pressure operation (all-season operation with energy optimisation)	▲	▲	▲	▲	▲	▲	▲	▲	▲	▲	▲	▲
	Fans speed variator	▲	▲	▲	▲	▲	▲	▲	▲	▲	▲	▲	▲
	LonWorks gateway	▲	▲	▲	▲	▲	▲	▲	▲	▲	▲	▲	▲
	Container handling equipment	▲	▲	▲	▲	▲	▲	▲	▲	▲	▲	▲	▲
	Shackles	▲	▲	▲	▲	▲	▲	▲	▲	▲	▲	▲	▲

	POWERCIAT	3050Z HPS	3400Z HPS	3750Z HPS	4200Z HPS
Standard	Refrigerant R407C	●	●	●	●
	3 refrigerant circuits	●	●	●	●
	Main safety switch	●	●	●	●
	Control circuit transformer	●	●	●	●
	Wiring numbering	●	●	●	●
	All-season operation (Min. outdoor temp.: -15°C)	●	●	●	●
	RS 485 communication interface	●	●	●	●
	Compressors Part Winding starting	●	●	●	●
	Phase monitor (reversal, loss, over and under voltage)	●	●	●	●
Options	LOW NOISE (LN) version	▲	▲	▲	▲
	XTRA LOW NOISE (XLN) version	▲	▲	▲	▲
	Compressors isolating suction valves	▲	▲	▲	▲
	Antifreeze protection	▲	▲	▲	▲
	Coil treatment (Blygold or polyurethane)	▲	▲	▲	▲
	Single pump (LXH - LXC versions)	▲	▲	▲	▲
	Twin pump (LXH - LXC versions)	▲	▲	▲	▲
	Anti-vibration mounts	▲	▲	▲	▲
	Hydraulic connectors	▲	▲	▲	▲
	Remote control box (remote console)	▲	▲	▲	▲
	Dry-contact relay board	▲	▲	▲	▲
	Electronic expansion valve	▲	▲	▲	▲
	Low temperature glycol water from 0 °C to - 8 °C	▲	▲	▲	▲
	Desuperheaters	▲	▲	▲	▲
	Soft Start	▲	▲	▲	▲
	Management of several units - MULTICONNECT	▲	▲	▲	▲
	Optimised high pressure operation (all-season operation with energy optimisation)	▲	▲	▲	▲
	Fans speed variator	▲	▲	▲	▲
	LonWorks gateway	▲	▲	▲	▲
	Container handling equipment	▲	▲	▲	▲
	Shackles	▲	▲	▲	▲

● Standard supply ▲ Option - Not available

POWERCIAT LX R407C

TECHNICAL CHARACTERISTICS

POWERCIAT LX - LXH - LXC			1200Z	1200Z HPS	1500Z	1500Z HPS	1850Z	1850Z HPS	2150Z	2150Z HPS
High performance version	Cooling capacity (1)	kW	236	261	305	338	362	409	429	486
	Absorbed power (2)	kW	101	110	129	140	156	172	184	202
	EER/ESEER		2.31/2.92	2.37/2.92	2.35/2.94	2.41/2.96	2.32/2.91	2.38/2.98	2.32/2.89	2.41/2.94
Low noise and xtra low noise versions	Cooling capacity (1)	kW	230	258	300	335	354	402	420	478
	Absorbed power (2)	kW	101	109	128	138	155	173	182	209
	EER/ESEER		2.28/2.97	2.37/2.95	2.34/3.05	2.43/3.06	2.27/2.96	2.32/2.96	2.3/2.98	2.29/3.02
Compressor	Type		Accessible hermetic twin screw							
	Number		2							
	Rotation speed	rpm	2900							
	R407C refrigerant charge (kg)	circ.1	23	24	40	45	55	56	55	56
		circ.2	23	24	25	26	25	26	45	46
	Capacity control		Modulating from 25 to 100% (50 to 100% on each compressor)							
	Type of oil for R407C		BITZER BSE 170							
	Oil charge for compressor	litres	2 x 9		15 + 9		22 + 9		22 + 15	
Evaporator	Type		Direct expansion shell and tubes							
	Number		1							
	Water capacity	litres	56,5		68				85	
	Hydraulic connections		VICTAULIC type							
	Maximum pressure on water side	bar	10							
	Mini / maxi water flow	m³/h	30 / 82		40 / 100				60 / 135	
Air cooled condenser	Fans		Direct drive propeller type - 800 mm diameter							
	Number of fans		4		6				8	
	Rotation speed	rpm	HIGH PERFORMANCE version 905 rpm							
	Air flow	m³/h	88 000		136 000		132 000		180 000	
	Motor unit power	kW	2,6							
	Rotation speed	rpm	LOW NOISE - XTRA LOW NOISE versions 715 rpm							
	Air flow	m³/h	72 400		112 200		108 600		148 400	
	Motor unit power	kW	1,8							
High performance version	Lw / Lp (3)	dB(A)	96/64		98/66				100/67	
Low noise version (LN)	Lw / Lp (3)	dB(A)	90/58		92/60				95/62	
Xtra low noise version (XLN)	Lw / Lp (3)	dB(A)	85/53		87/55				88/55	

POWERCIAT LX - LXH - LXC			2500Z	2500Z HPS	2800Z	2800Z HPS	3050Z HPS	3400Z HPS	3750Z HPS	4200Z HPS
High performance version	Cooling capacity (1)	kW	522	594	605	690	740	820	903	1076
	Absorbed power (2)	kW	216	238	244	268	287	320	362	413
	EER/ESEER		2.42/3	2.5/2.95	2.47/3.05	2.57/3.06	2.57/3.26	2.55/3.05	2.49/3.07	2.4/3.07
Low noise and xtra low noise version	Cooling capacity (1)	kW	509	582	595	685	725	803	881	1045
	Absorbed power (2)	kW	216	235	240	262	303	331	364	437
	EER/ESEER		2.36/3.01	2.48/2.95	2.48/3.16	2.61/3.15	2.39/3.21	2.42/3.1	2.42/3.21	2.35/3.13
Compressor	Type		Accessible hermetic twin screw							
	Number		2				3			
	Rotation speed	rpm	2900							
	R407C refrigerant charge (kg)	circ.1	55	60	62	63	62	60	60	86
		circ.1	55	60	62	63	50	60	60	92
		circ.1	-	-	-	-	50	45	60	92
	Capacity control		Modulating from 25 to 100% (50 to 100% on each compressor)				Modulating from 17 to 100% (50 to 100% on each compressor)			
	Type of oil for R407C		BITZER BSE 170							
	Oil charge for compressor	litres	2 x 22				22 + 2 x 15	2 x 22 + 15	3 x 22	
Evaporator	Type		Direct expansion shell and tubes							
	Number		1							
	Water capacity	litres	122				219			440
	Hydraulic connections		VICTAULIC type							
	Maximum pressure on water side	bar	10							
	Mini / maxi water flow	m³/h	60 / 135				80 / 180			80 / 216
Air cooled condenser	Fans		Direct drive propeller type - 800 mm diameter							
	Number of fans		8		12					15
	Rotation speed	rpm	HIGH PERFORMANCE version 905 rpm							
	Air flow	m³/h	176 000		276 000		272 000	268 000	264 000	330 000
	Motor unit power	kW	2,6							
	Rotation speed	rpm	LOW NOISE - XTRA LOW NOISE versions 715 rpm							
	Air flow	m³/h	144 800		228 000		224 400	220 800	217 200	285 000
	Motor unit power	kW	1,8							
High performance version	Lw / Lp (3)	dB(A)	101/68		101/68		101/68	102/69		
Low noise version (LN)	Lw / Lp (3)	dB(A)	96/63		98/65		97/64	98/65		
Xtra low noise version (XLN)	Lw / Lp (3)	dB(A)	89/56		91/58		90/57	91/58		

(1) Cooling capacity for 12°C / 7°C evaporator chilled water and 35°C condenser air inlet.
(2) Compressors + fans absorbed power
(3) **Lw** : Global sound power level - **Lp** : Global sound pressure level at 10 metres, in free field, following ISO 3744 regulation

ELECTRICAL CHARACTERISTICS

POWERCIAT LX - LXH - LXC		1200Z	1200Z HPS	1500Z	1500Z HPS	1850Z	1850Z HPS	2150Z	2150Z HPS
COMPRESSORS (1)									
Maximum nominal current	A	216 (2 x 108)		270 (162+108)		324 (216+108)		378 (216+162)	
Part winding starting current (3)	A	377		531		720		774	
Starting current with SOFT START option (3)	A	283		377		506		560	
FAN MOTORS (1)									
HIGH PERFORMANCE version 905 rpm									
Maximum nominal current	A	24		36				48	
LOW NOISE - XTRA LOW NOISE versions 715 rpm									
Maximum nominal current	A	12,8		19,2				25,6	
LX ANTIFREEZE PROTECTION (OPTION) (2)									
Evaporator heating element power	W	180		240					
Maximum nominal current	A	0,80		1,05					
LXC ANTIFREEZE PROTECTION (OPTION) (2)									
Evaporator + hydraulic pipe + expansion vessel heating element power	W	420		480				540	
Maximum nominal current	A	1.83		2.1				2.35	
LXH ANTIFREEZE PROTECTION (OPTION)									
Evaporator heating element power + piping	W	300		420				480	
Maximum nominal current	A	1,3 (2)		1.83 (2)				2.1	
Hydraulic module heating element power	W	1500							
Maximum nominal current	A	2,3 (1)							
CONTROL AUXILIARY CIRCUIT (2)									
Maximum nominal current	A	4							
Transformer power	VA	1600							

POWERCIAT LX - LXH - LXC		2500Z	2500Z HPS	2800Z	2800Z HPS	3050Z HPS	3400Z HPS	3570Z HPS	4200Z HPS
COMPRESSORS (1)									
Maximum nominal current	A	432 (2 x 216)		492 (2 x 246)		540 (216 + 2 x 162)	594 (2 x 216 + 162)	648 (3 x 216)	738 (3 x 246)
Part winding starting current (3)	A	828		911		936	990	1044	1157
Starting current with SOFT START option (3)	A	614		647		722	776	830	924
FAN MOTORS (1)									
HIGH PERFORMANCE version 905 rpm									
Maximum nominal current	A	48		72					90
LOW NOISE - XTRA LOW NOISE versions 715 rpm									
Maximum nominal current	A	25,6		38,4					48
LX ANTIFREEZE PROTECTION (OPTION) (2)									
Evaporator heating element power	W	320							
Maximum nominal current	A	1,40							
LXC ANTIFREEZE PROTECTION (OPTION) (2)									
Evaporator + hydraulic pipe + expansion vessel heating element power	W	560							
Maximum nominal current	A	2.5							
LXH ANTIFREEZE PROTECTION (OPTION)									
Evaporator heating element power + piping	W	560				500			
Maximum nominal current	A	2,5 (2)				2,20 (2)			
Hydraulic module heating element power	W	1500							
Maximum nominal current	A	2.3 (1)							
CONTROL AUXILIARY CIRCUIT (2)									
Maximum nominal current	A	4							
Transformer power	VA	1600				2000			

SINGLE PUMPS (LXH - LXC ONLY) (1)																
Number		102	103	104	105	106	107	108	109	110	111	112	113	114	115	116
Power	kW	3	4	4	5,5	5,5	7,5	7,5	11	11	11	15	15	18,5	22	30
Maximum nominal current	A	6,3	8,0	8,0	10,3	10,3	13,8	13,8	20,0	20,0	20,0	26,5	26,5	32,5	39	53
TWIN PUMPS (LXH - LXC ONLY) (1)																
Number		202	203	204	205	206	207	208	209	210	211	212	213	214	215	216
Power	kW	3	4	4	5,5	5,5	7,5	7,5	11	11	11	15	15	18,5	22	30
Maximum nominal current	A	6,3	8,0	8,0	10,3	10,3	13,8	13,8	20,0	20,0	20,0	26,5	26,5	32,5	39	53

(1) Current for 400V / 3PH / 50HZ voltage
(2) Current for 230V / 1PH / 50HZ voltage
(3) Starting current of the biggest compressor + maximum current of others compressors in full load
Nominal current for cables selection = add the maximum nominal currents indicated in the above tables

PERFORMANCES

POWERCIAT LX-LXH-LXC
HIGH PERFORMANCE version

R407C

LX LXH LXC	Evaporator water outlet temperature °C		CONDENSER AIR INLET TEMPERATURE °C											
			26		29		32		35		38		41	
			Pf kW	Pa kW	Pf kW	Pa kW	Pf kW	Pa kW	Pf kW	Pa kW	Pf kW	Pa kW	Pf kW	Pa kW
1200 Z	Glycol water	-8	**146.1**	74.3	**139.8**	78.2	**132.6**	82.3	**126.2**	86.8	**119.9**	91.6		
		-6	**158.8**	75.6	**152.6**	79.7	**146.2**	83.9	**139.7**	88.6	**132.0**	93.6		
		-4	**171.9**	77.0	**165.2**	81.0	**158.4**	85.4	**151.2**	90.1	**144.5**	95.3		
		-2	**188.1**	78.6	**181.0**	82.7	**173.8**	87.2	**166.3**	92.0	**158.4**	97.2	**150.2**	102.9
		0	**202.5**	80.1	**194.9**	84.3	**187.5**	88.8	**179.5**	93.7	**171.1**	99.0	**162.5**	104.7
		2	**217.4**	81.7	**209.5**	85.9	**201.7**	90.6	**193.2**	95.5	**184.6**	101.0	**175.4**	106.8
	Pure water	5	**246.7**	84.9	**238.3**	89.3	**229.5**	94.3	**220.2**	99.3	**210.6**	104.8	**200.8**	110.8
		6	**255.1**	85.9	**246.2**	90.3	**237.2**	95.1	**227.6**	100.3	**218.1**	106.0	**207.9**	112.0
		7	**263.5**	86.9	**254.6**	91.4	**245.2**	96.2	**235.5**	101.5	**225.4**	107.1	**214.9**	113.5
		8	**272.0**	88.0	**262.8**	92.4	**253.2**	97.3	**243.3**	102.6	**233.1**	108.3	**222.5**	114.5
		10	**292.5**	90.6	**282.7**	95.1	**272.4**	100.0	**262.0**	105.4	**252.0**	111.1	**241**	117.2
		12	**310.9**	93.0	**300.5**	97.5	**289.6**	102.5	**279.2**	108.1	**269.1**	113.8	**258.0**	120.5
1200 Z H.P.S.	Glycol water	-8	**167.1**	78.1	**163.0**	82.7	**158.8**	87.6	**153.5**	92.9	**147.4**	98.7		
		-6	**179.1**	80.6	**175.2**	85.3	**170.6**	89.1	**165.7**	94.5	**159.8**	100.4		
		-4	**192.6**	80.8	**188.6**	85.6	**182.8**	91.9	**178.5**	96.2	**172.5**	102.3		
		-2	**207.8**	82.3	**203.1**	88.6	**198.6**	94.0	**192.9**	99.7	**186.9**	106.0	**180.3**	111.1
		0	**222.0**	83.8	**217.3**	88.8	**212.3**	94.2	**206.9**	100.1	**200.8**	106.5	**193.8**	113.3
		2	**236.1**	85.3	**230.9**	91.9	**226.2**	95.9	**220.6**	102.0	**214.5**	108.6	**206.2**	117.5
	Pure water	5	**263.7**	90.0	**259.1**	93.7	**253.2**	99.5	**247.3**	105.8	**239.7**	114.9	**233.4**	120.1
		6	**272.1**	89.3	**265.6**	96.3	**260.2**	102.4	**254.6**	106.9	**247.1**	116.0	**240.5**	121.4
		7	**279.3**	91.9	**274.5**	95.6	**268.5**	101.6	**261.4**	110.1	**254.5**	117.2	**246.9**	124.9
		8	**287.3**	92.9	**281.6**	98.5	**276.5**	102.7	**269.7**	109.2	**262.9**	116.3	**254.4**	126.3
		10	**306.3**	95.4	**300.3**	101.1	**294.6**	105.2	**286.0**	114.8	**280.4**	119.2	**271.5**	129.6
		12	**323.4**	97.6	**316.8**	103.4	**309.9**	109.7	**302.8**	116.7	**296.0**	121.7		
1500 Z	Glycol water	-8	**188.7**	95.9	**180.6**	100.8	**172.3**	106.0	**164.3**	111.8	**154.5**	117.7		
		-6	**206.0**	97.5	**197.5**	102.5	**188.8**	107.9	**179.2**	113.6	**169.3**	119.8		
		-4	**223.2**	99.2	**214.6**	104.3	**205.6**	109.7	**195.9**	115.6	**185.7**	121.9		
		-2	**243.4**	101.1	**234.4**	106.3	**225.2**	111.9	**215.3**	118.0	**205.3**	124.5	**194.6**	131.5
		0	**261.9**	102.9	**252.3**	108.2	**242.7**	113.9	**232.5**	120.1	**221.8**	126.7	**210.7**	133.8
		2	**281.2**	104.8	**271.2**	110.2	**260.9**	116.0	**250.2**	122.3	**239.3**	129.0	**227.6**	136.3
	Pure water	5	**319.6**	108.8	**308.3**	114.3	**296.9**	120.3	**285.3**	126.8	**273.0**	133.9	**260.6**	141.3
		6	**330.4**	110.0	**318.8**	115.6	**307.1**	121.6	**295.0**	128.1	**282.7**	135.2	**269.8**	142.7
		7	**341.2**	111.2	**329.6**	116.9	**317.4**	122.9	**305.2**	129.5	**292.4**	136.5	**279.4**	144.2
		8	**352.3**	112.5	**340.3**	118.2	**327.9**	124.3	**315.3**	130.8	**302.4**	138.0	**288.9**	145.6
		10	**378.7**	115.7	**365.9**	121.4	**352.9**	127.6	**339.5**	134.2	**325.9**	141.4	**311.8**	149.2
		12	**402.4**	118.7	**389.0**	124.4	**374.6**	130.9	**361.3**	137.2	**346.9**	144.4	**332.3**	152.4
1500 Z H.P.S.	Glycol water	-8	**214.8**	101.9	**208.8**	107.5	**203.4**	113.7	**196.5**	120.4	**187.4**	126.8		
		-6	**231.9**	102.1	**225.8**	109.4	**220.2**	115.8	**213.8**	121.0	**204.1**	129.8		
		-4	**247.9**	105.3	**243.0**	111.4	**237.1**	117.9	**230.6**	124.9	**222.0**	132.4		
		-2	**268.3**	107.3	**263.0**	113.5	**256.6**	120.3	**250.3**	127.6	**243.2**	135.5	**235.3**	141.9
		0	**285.7**	109.1	**280.2**	115.5	**274.3**	122.4	**267.4**	129.9	**259.0**	137.9	**251.7**	146.7
		2	**304.3**	111.0	**298.3**	117.5	**291.9**	124.6	**285.1**	132.3	**277.4**	140.7	**268.9**	149.6
	Pure water	5	**340.3**	114.9	**333.8**	121.8	**327.8**	126.9	**319.3**	137.2	**311.1**	145.8	**302.2**	155.2
		6	**350.2**	116.0	**343.6**	123.0	**336.5**	130.4	**329.8**	136.1	**320.3**	147.3	**311.4**	156.8
		7	**360.6**	117.2	**353.5**	124.2	**346.2**	131.8	**338.4**	140.0	**329.2**	148.8	**321.4**	158.9
		8	**370.8**	118.5	**363.8**	125.5	**355.8**	133.4	**348.1**	141.4	**339.2**	150.3	**329.9**	160.0
		10	**394.8**	121.4	**387.3**	128.6	**379.4**	136.4	**370.9**	144.7	**362.0**	153.9	**353.2**	161.5
		12	**416.6**	124.2	**408.8**	131.6	**400.2**	139.3	**391.4**	147.7	**381.8**	157.1		

Pf : Cooling capacity calculated with :
- water inlet/outlet differential as per curves page 16
- 0.00005 m2 °C/W fouling factor

Pa : Compressors + fans absorbed power

Glycol water is necessary
Low temperature option necessary
EUROVENT conditions

PERFORMANCES

POWERCIAT LX-LXH-LXC
HIGH PERFORMANCE version

R407C

LX LXH LXC	Evaporator water outlet temperature °C		CONDENSER AIR INLET TEMPERATURE °C											
			26		29		32		35		38		41	
			Pf kW	Pa kW	Pf kW	Pa kW	Pf kW	Pa kW	Pf kW	Pa kW	Pf kW	Pa kW	Pf kW	Pa kW
1850 Z	Glycol water	-8	**226.2**	114.0	**216.3**	119.6	**206.2**	125.6	**194.7**	132.0	**181.2**	138.5		
		-6	**246.3**	116.2	**236.0**	117.0	**225.0**	128.2	**213.4**	134.7	**200.4**	141.6		
		-4	**267.1**	118.5	**257.0**	115.3	**244.5**	130.8	**232.0**	136.5	**219.1**	144.4		
		-2	**290.8**	121.1	**279.4**	127.3	**267.5**	133.7	**254.9**	140.6	**241.7**	147.8	**227.6**	155.3
		0	**312.9**	123.5	**300.7**	129.8	**288**	136.6	**275.3**	143.5	**261.6**	150.8	**247.1**	158.4
		2	**335.7**	126.1	**323.1**	132.5	**310.1**	139.3	**296.5**	146.5	**282.2**	154.0	**267.1**	161.7
	Pure water	5	**380.9**	131.4	**367.6**	138.1	**353.2**	145.1	**338.4**	152.6	**323.0**	160.4	**306.8**	168.4
		6	**394.1**	133.0	**380.0**	139.7	**365.2**	146.8	**350.1**	154.4	**334.3**	162.2	**317.6**	170.7
		7	**406.9**	134.5	**392.5**	141.3	**377.6**	148.6	**361.9**	156.1	**345.8**	164.1	**328.9**	172.5
		8	**420.1**	136.2	**405.3**	143.1	**389.9**	150.3	**374.1**	158.0	**357.7**	166.0	**340.4**	174.4
		10	**451.2**	140.2	**435.4**	147.1	**419.2**	154.5	**402.4**	162.3	**383.6**	171.1	**367.3**	179.2
		12	**479.3**	143.9	**463.0**	150.9	**445.6**	158.4	**428.0**	166.2	**410.1**	174.6	**391.5**	183.4
1850 Z H.P.S.	Glycol water	-8	**261.8**	120.3	**254.7**	126.9	**246.3**	133.9	**236.6**	141.3	**220.0**	148.0		
		-6	**282.1**	124.8	**275.0**	129.5	**266.1**	136.6	**256.9**	144.3	**247.5**	153.8		
		-4	**302.3**	127.3	**295.5**	132.1	**286.4**	141.8	**276.6**	149.8	**265.8**	158.2		
		-2	**327.2**	127.9	**319.5**	135.1	**310.6**	145.4	**301.0**	153.7	**290.3**	162.3	**277.9**	170.0
		0	**348.6**	130.3	**340.3**	140.5	**331.8**	148.5	**322.1**	157.1	**311.2**	165.9	**296.8**	175.6
		2	**371.0**	132.9	**362.3**	143.4	**353.6**	151.8	**343.6**	160.6	**332.7**	169.6	**320.4**	179.1
	Pure water	5	**414.3**	141.3	**405.6**	149.5	**396.4**	158.4	**386.0**	167.6	**374.2**	177.6	**361.8**	187.2
		6	**426.4**	142.9	**417.8**	151.2	**408.3**	160.2	**397.8**	169.8	**385.6**	179.2	**372.9**	189.4
		7	**438.9**	144.5	**429.3**	152.9	**419.8**	162.0	**408.5**	171.6	**397.4**	181.5	**384.5**	191.9
		8	**451.2**	146.2	**442.0**	154.8	**432.0**	164.0	**420.3**	174.4	**409.2**	183.7	**396.1**	194.3
		10	**481.5**	146.5	**470.7**	159.1	**460.3**	168.6	**448.4**	178.6	**436.0**	188.7	**423.1**	199.7
		12	**506.9**	153.9	**496.3**	163.0	**484.1**	173.3	**473.6**	182.8	**460.3**	193.3		
2150 Z	Glycol water	-8	**269.3**	135.8	**257.1**	142.0	**246.1**	149.7	**233.0**	157.0	**216.0**	164.8		
		-6	**292.4**	138.3	**280.3**	145.2	**267.5**	152.5	**254.0**	160.2	**239.1**	168.3		
		-4	**316.2**	140.8	**303.5**	147.9	**290.1**	155.3	**276.0**	163.2	**261.3**	171.5		
		-2	**344.9**	143.9	**331.6**	151.1	**317.6**	158.8	**303.1**	166.9	**287.7**	175.3	**271.5**	184.2
		0	**371.0**	146.7	**356.9**	154.0	**342.3**	161.9	**327.1**	170.2	**311.2**	178.8	**294.5**	187.8
		2	**398.1**	149.6	**383.3**	157.1	**368.1**	165.2	**352.2**	173.6	**335.6**	182.4	**318.0**	191.6
	Pure water	5	**452.3**	155.7	**435.8**	163.5	**419.1**	171.8	**401.5**	180.5	**383.2**	189.8	**364.8**	199.1
		6	**467.3**	157.4	**450.6**	165.3	**433.1**	173.7	**415.2**	182.5	**397.1**	191.7	**377.9**	201.3
		7	**482.7**	159.3	**465.6**	167.3	**447.9**	175.7	**429.4**	184.5	**410.6**	193.8	**391.1**	203.5
		8	**498.6**	161.2	**480.8**	169.2	**462.5**	177.7	**442.7**	187.1	**424.6**	196.0	**404.8**	205.9
		10	**535.3**	165.8	**516.7**	173.9	**497.3**	182.5	**477.4**	191.6	**457.2**	201.1	**436.5**	211.2
		12	**569.2**	170.2	**549.5**	178.3	**527.7**	187.5	**508.2**	196.1	**487.0**	205.8	**465.3**	216.1
2150 Z H.P.S.	Glycol water	-8	**312.5**	144.8	**304.3**	152.6	**294.6**	159.3	**284.7**	170.8/	**273.5**	178.0		
		-6	**335.6**	148.4	**327.6**	156.6	**318.3**	165.1	**306.8**	174.2	**290.6**	182.8		
		-4	**359.2**	151.2	**351.0**	159.6	**342.1**	168.5	**331.2**	178.0	**319.5**	187.9		
		-2	**387.4**	154.5	**379.3**	163.4	**369.4**	172.5	**359.3**	182.2	**347.4**	192.5	**333.0**	200.8
		0	**412.8**	157.5	**404.1**	166.5	**394.3**	176.0	**383.7**	186.0	**371.5**	196.4	**358.1**	207.5
		2	**439.2**	160.7	**430.3**	170.0	**420.1**	179.7	**410.4**	190.6	**396.7**	200.6	**382.9**	211.8
	Pure water	5	**490.6**	167.0	**481.8**	177.0	**470.2**	187.1	**458.4**	197.9	**445.6**	209.3	**431.4**	221.1
		6	**505.1**	168.8	**495.3**	178.9	**484.0**	189.8	**471.9**	200.0	**459.1**	211.6	**444.8**	223.6
		7	**520.2**	170.9	**510.0**	181.0	**498.5**	191.7	**486.1**	202.4	**473.0**	214.2	**458.3**	226.2
		8	**535.0**	172.8	**524.3**	183.0	**512.5**	193.5	**499.9**	204.7	**486.7**	216.7	**474.1**	225.4
		10	**569.2**	177.3	**557.0**	188.4	**546.0**	198.8	**533.1**	210.5	**518.5**	222.6	**506.3**	231.2
		12	**600.3**	181.6	**589.4**	192.4	**576.4**	203.3	**562.9**	215.3	**547.9**	227.7		

Pf : Cooling capacity calculated with :
- water inlet/outlet differential as per curves page 16
- 0.00005 m2 °C/W fouling factor

Pa : Compressors + fans absorbed power

Glycol water is necessary
Low temperature option necessary
EUROVENT conditions

PERFORMANCES

POWERCIAT LX-LXH-LXC
HIGH PERFORMANCE version

R407C

LX LXH LXC	Evaporator water oultet temperature °C		CONDENSER AIR INLET TEMPERATURE °C 26 Pf kW	26 Pa kW	29 Pf kW	29 Pa kW	32 Pf kW	32 Pa kW	35 Pf kW	35 Pa kW	38 Pf kW	38 Pa kW	41 Pf kW	41 Pa kW
2500 Z	Glycol water	-8	322.9	155.5	306.9	162.8	289.4	170.4	272.1	178.6	253.3	187.1		
		-6	351.8	158.8	335.1	166.4	317.5	174.4	299.4	182.7	279.5	191.3		
		-4	380.7	161.3	363.3	170.0	346.9	178.4	328.1	186.9	307.5	195.7		
		-2	422.9	166.9	405.3	175.2	387.5	183.9	368.2	192.8	348.1	202.0	326.9	211.4
		0	454.7	170.6	436.4	179.2	417.5	188.0	397.6	197.2	376.6	206.6	354.9	216.1
		2	475.0	180.3	468.7	183.3	449.0	192.3	428.2	201.8	406.6	211.4	383.9	221.1
	Pure water	5	553.2	182.6	532.5	191.6	510.7	201.1	488.1	210.8	464.7	220.9	439.9	231.2
		6	571.6	184.9	550.2	194.0	527.9	203.5	504.8	213.4	481.0	223.6	456.0	233.9
		7	590.2	187.3	568.3	196.4	545.6	206.1	522.1	216.1	497.4	226.6	472.5	236.9
		8	609.5	189.8	586.7	199.0	563.6	208.7	539.5	218.8	513.7	229.6	488.9	239.9
		10	654.8	195.8	630.9	205.1	606.1	215.0	580.9	225.2	554.7	235.9	527.9	247.0
		12	695.4	201.2	669.8	210.8	644.3	220.5	617.3	231.1	590.5	241.8	563.7	253.0
2500 Z H.P.S.	Glycol water	-8	373.1	167.5	361.9	176.2	349.4	182.3	333.6	195.0	317.8	205.1		
		-6	402.7	171.4	394.7	177.7	378.2	186.6	363.7	200.1	354.5	212.0		
		-4	436.2	172.2	424.2	181.6	409.2	191.0	393.9	205.1	375.5	215.5		
		-2	478.0	177.2	466.5	187.2	452.6	201.7	438.3	212.0	421.7	222.2	394.6	232.5
		0	509.4	181.0	497.6	191.3	483.6	206.3	469.1	217.8	452.1	227.2	433.5	237.7
		2	541.7	184.9	528.5	200.1	515.7	211.6	500.2	223.2	480.8	232.5	464.1	243.2
	Pure water	5	605.1	203.3	591.1	210.7	576.1	221.2	560.1	231.8	542.8	242.9	524.0	254.3
		6	622.5	205.5	607.6	213.4	593.3	223.8	576.7	234.7	559.6	245.9	539.7	257.2
		7	640.3	207.8	626.8	216.0	610.2	226.7	593.5	237.7	576.3	249.2	556.1	260.5
		8	658.4	210.1	642.7	218.9	627.7	229.5	611.2	240.6	593.0	252.5	573.1	263.8
		10	699.3	211.5	684.7	223.9	667.1	236.5	651.7	247.7	632.7	259.4	618.0	271.7
		12	737.8	217.2	722.4	229.8	704.8	242.5	687.6	254.2	667.1	265.9		
2800 Z	Glycol water	-8	377.0	181.4	360.7	190.6	345.4	200.7	327.7	211.3	309.3	222.8		
		-6	410.7	184.5	394.4	194.0	376.5	204.1	359.4	215.0	339.0	226.5		
		-4	443.3	187.5	426.3	197.2	409.1	207.6	391.1	218.7	371.9	230.6		
		-2	484.3	191.3	466.5	201.1	448.1	211.7	428.7	223.5	409.5	235.3	388.7	248.6
		0	520.1	194.6	501.6	204.6	482.6	215.5	462.5	227.0	441.9	239.4	420.1	253.0
		2	558.0	198.2	538.1	208.3	517.9	219.4	497.4	231.1	476.2	243.9	453.3	257.6
	Pure water	5	632.8	205.8	610.9	216.2	588.8	227.5	565.6	239.5	542.4	252.7	517.8	266.9
		6	653.6	208.0	631.6	218.5	608.5	229.9	584.7	242.5	560.9	255.2	535.8	269.5
		7	675.3	210.4	652.2	220.9	628.8	232.3	604.8	244.5	580.0	257.9	554.4	272.3
		8	697.2	212.8	673.5	223.4	649.4	234.9	624.9	247.0	599.3	260.5	573.3	275.4
		10	749.1	218.8	724.2	229.5	698.5	241.0	672.0	253.3	645.3	266.9	617.5	281.7
		12	796.1	224.4	769.9	235.1	742.7	246.6	715.3	259.0	686.7	272.6	657.7	287.6
2800 Z H.P.S.	Glycol water	-8	437.7	195.0	429.3	206.3	413.9	219.9	402.0	230.9	389.0	245.0		
		-6	472.4	198.7	461.2	212.3	446.9	224.3	435.0	235.5	426.0	250.0		
		-4	506.5	202.3	494.0	216.3	485.4	226.8	469.8	240.3	457.3	255.6		
		-2	549.0	202.2	539.3	214.2	527.2	229.7	515.2	243.7	501.5	258.8	490.4	275.0
		0	583.9	205.5	573.9	217.7	562.0	234.0	549.0	248.1	536.4	260.6	519.8	280.7
		2	620.4	209.0	608.1	224.4	596.8	238.1	583.4	252.5	569.9	268.9	554.6	286.6
	Pure water	5	690.4	219.4	680.7	229.3	666.1	246.9	654.4	258.5	637.2	279.0	620.5	297.4
		6	710.0	221.6	700.1	231.5	685.2	249.3	670.6	264.7	658.0	277.9	641.1	296.3
		7	730.5	223.9	717.7	237.2	704.0	251.7	690.4	267.6	676.0	286.0	659.7	299.2
		8	750.6	226.2	740.5	236.2	724.1	254.4	711.8	266.2	693.2	288.7	676.6	307.0
		10	798.9	231.9	785.6	245.8	771.1	260.6	758.0	272.4	738.9	294.9	720.6	314.5
		12	841.7	237.1	828.1	251.2	812.8	266.2	799.5	278.0	781.4	295.9		

Pf : Cooling capacity calculated with :
- water inlet/outlet differential as per curves page 16
- 0.00005 m2 °C/W fouling factor

Pa : Compressors + fans absorbed power

Glycol water is necessary
Low temperature option necessary
EUROVENT conditions

PERFORMANCES

POWERCIAT LX-LXH-LXC
HIGH PERFORMANCE version

R407C

LX LXH LXC	Evaporator water oultet temperature °C		CONDENSER AIR INLET TEMPERATURE °C											
			26		29		32		35		38		41	
			Pf kW	Pa kW	Pf kW	Pa kW	Pf kW	Pa kW	Pf kW	Pa kW	Pf kW	Pa kW	Pf kW	Pa kW
3050 Z	Glycol water	-8	448.7	205.1	429.7	215.5	421.4	228.0	402.0	241.0	383.0	255.3		
		-6	478.5	208.3	466.5	219.7	450.0	231.7	437.8	245.0	424.8	260.0		
		-4	513.4	211.9	502.3	223.8	491.8	237.0	471.0	249.7	457.1	264.4		
		-2	575.9	218.3	559.2	230.4	547.0	243.8	526.2	257.0	513.8	270.2	501.4	288.0
		0	619.8	223.2	601.4	235.2	585.0	248.6	572.3	262.5	549.9	276.4	531.5	294.1
		2	658.2	227.1	642.7	240.1	626.7	254.0	606.9	267.9	587.9	281.8	574.2	301.2
	Pure water	5	753.9	237.9	733.2	251.2	718.3	266.3	695.1	280.8	680.1	297.9	643.8	317.3
		6	771.6	240.1	758.2	253.4	739.2	269.0	719.1	284.5	699.5	301.1	678.5	321.3
		7	796.7	243.1	778.9	256.4	761.8	272.0	740.2	287.5	717.6	303.9	698.3	324.2
		8	819.4	245.9	797.8	259.2	782.9	274.9	762.3	290.7	740.1	307.5	719.9	327.5
		10	875.1	260.0	857.7	271.2	837.6	282.4	816.4	298.6	794.2	316.2	773.3	336.0
		12	921.6	265.6	906.1	277.2	884.5	288.8	862.9	305.3	841.7	321.7		
3400 Z	Glycol water	-8	498.6	225.1	485.3	240.1	468.0	250.0	445.7	263.4	427.0	289.0		
		-6	534.7	229.8	523.1	242.6	504.0	255.4	484.9	269.5	462.6	293.5		
		-4	576.3	234.5	561.4	247.4	543.3	260.9	522.7	275.0	504.0	290.4		
		-2	645.3	242.3	625.3	255.4	612.5	270.6	586.6	284.5	564.9	300.0	542.0	314.2
		0	687.6	247.2	671.1	261.2	651.4	275.8	630.6	291.0	611.8	306.0	583.8	320.3
		2	735.0	252.7	724.9	268.2	698.4	282.4	672.9	303.8	661.4	313.5	632.6	327.6
	Pure water	5	833.8	263.8	814.0	279.9	793.9	295.9	776.0	313.5	746.1	330.0	725.1	342.5
		6	858.7	267.8	838.7	283.3	814.1	305.8	795.8	316.7	773.5	334.6	748.2	350.0
		7	884.0	271.1	865.0	286.9	844.0	311.7	819.9	320.5	793.9	338.2	770.3	356.5
		8	907.2	276.4	890.2	290.3	868.2	315.4	844.5	324.4	819.1	342.6	800.3	363.4
		10	971.7	285.0	948.3	308.3	929.8	324.1	903.9	333.7	877.8	352.8	856.2	373.5
		12	1026.3	295.7	1000.5	314.6	981.0	333.5	952.7	343.3	928.3	361.4		
3750 Z	Glycol water	-8	557.8	245.0	544.0	260.0	518.0	272.1	493.9	286.8	475.0	307.0		
		-6	593.8	250.9	580.1	265.8	555.3	278.1	536.7	293.6	515.0	311.0		
		-4	641.4	256.7	624.1	270.8	601.5	284.9	577.5	300.0	553.6	316.1		
		-2	715.8	265.6	696.1	280.3	675.6	295.7	648.5	317.3	623.4	335.6	594	351.6
		0	764.4	271.4	743.9	286.5	724.5	302.8	697.9	325.8	672.6	344.1	643.0	359.8
		2	815.3	277.6	801.9	294.4	773.4	310.0	750.3	335.2	717.6	352.7	693.1	361.9
	Pure water	5	921.5	291.0	898.0	313.2	874.0	333.8	844.5	352.9	828.1	370.2	788.8	378.9
		6	948.3	294.4	924.4	319.5	904.6	338.8	872.3	356.6	850.1	374.2	816.8	383.9
		7	976.3	298.0	955.3	323.5	929.5	343.0	902.6	362.2	878.4	379.0	842.8	387.2
		8	1005.4	301.9	981.4	328.7	949.8	347.1	929.8	367.0	900.5	383.4	870.5	391.0
		10	1069.0	320.2	1045.5	338.6	1019.6	358.2	995.8	377.6	967.0	392.0	943.7	402.5
		12	1132.1	330.8	1102.6	347.4	1077.3	367.3	1047.8	388.0	1020.5	411.1		
4200 Z	Glycol water	-8	665	280	648	297	617	310	589	327	566	350		
		-6	708	286	691	303	661	317	640	335	614	355		
		-4	764	293	744	309	717	325	689	342	660	361		
		-2	853	303	829	319	806	338	773	362	742	383	708	402
		0	910	309	887	327	864	346	832	372	802	392	766	411
		2	971	317	956	335	921	354	894	382	856	403	826	413
	Pure water	5	1099	332	1070	357	1041	381	1006	403	987	422	940	432
		6	1130	335	1101	365	1078	387	1039	407	1013	427	974	438
		7	1163	340	1138	370	1108	391	1076	413	1046	432	1005	442
		8	1198	345	1169	375	1132	396	1108	419	1074	437	1038	446
		10	1274	365	1246	387	1215	408	1187	431	1152	447	1125	460
		12	1349	378	1314	396	1283	419	1249	443	1217	469		

Pf : Cooling capacity calculated with :
- water inlet/outlet differential as per curves page 16
- 0.00005 m2 °C/W fouling factor

Pa : Compressors + fans absorbed power

Glycol water is necessary
Low temperature option necessary
EUROVENT conditions

PERFORMANCES

POWERCIAT LX-LXH-LXC
LOW NOISE (LN) - XTRA LOW NOISE (XLN) versions

R407C

LX LXH LXC	Evaporator water oultet temperature °C		CONDENSER AIR INLET TEMPERATURE °C 26 Pf kW	26 Pa kW	29 Pf kW	29 Pa kW	32 Pf kW	32 Pa kW	35 Pf kW	35 Pa kW	38 Pf kW	38 Pa kW
1200 Z	Glycol water	-8	144.5	72.1	138.2	76.0	131.2	80.1	124.7	84.7		
		-6	157.2	73.6	150.9	77.6	144.4	81.9	137.8	86.7		
		-4	169.7	75.0	163.1	79.1	156.3	83.5	149.1	88.4		
		-2	185.8	76.8	178.5	81.0	171.4	85.6	163.7	90.5	155.9	95.8
		0	199.8	78.5	192.2	82.7	184.6	87.4	176.4	92.4	168.2	97.8
		2	214.2	80.2	206.3	84.6	198.3	89.4	189.8	94.5	180.8	99.9
	Pure water	5	242.7	83.8	234.1	88.4	225.1	93.3	215.3	98.8	206.2	104.4
		6	250.6	84.9	241.8	89.5	232.5	94.5	222.9	99.9	213.2	105.6
		7	258.9	86.0	249.6	90.6	240.3	95.7	230.4	101.1	220.5	106.9
		8	267.1	87.2	257.7	91.8	247.9	96.9	238.0	102.4	227.7	108.2
		10	286.7	90.0	276.8	94.8	266.5	99.9	256.0	105.4	245.1	111.4
		12	304.3	92.6	292.6	97.9	282.9	102.6	271.8	108.1	260.8	114.1
1200 Z H.P.S.	Glycol water	-8	165.3	76.2	161.2	80.8	156.7	85.9	151.3	91.3		
		-6	177.7	78.9	173.8	82.5	168.5	87.6	163.1	93.2		
		-4	190.3	80.5	186.3	84.1	181.4	89.4	175.8	95.1		
		-2	206.1	81.0	201.8	86.1	196.6	91.6	191.0	97.5	184.0	105.5
		0	219.9	82.7	215.0	87.9	209.8	93.5	203.4	101.4	197.7	106.2
		2	233.5	85.9	229.0	89.8	223.6	95.6	217.6	103.7	211.1	108.6
	Pure water	5	261.6	88.0	256.0	93.6	249.4	101.7	243.8	106.3	236.9	113.4
		6	269.1	89.0	262.8	96.5	256.7	102.8	250.1	109.6	244.0	114.8
		7	277.0	90.1	270.4	97.8	264.7	102.0	258.4	108.9	250.9	116.1
		8	284.9	91.2	278.4	99.2	271.5	105.4	264.7	112.3	257.4	119.8
		10	303.4	93.9	296.0	101.9	289.2	108.4	282.0	115.6	274.7	123.4
		12	318.5	98.7	312.2	104.6	305.0	111.2	297.5	118.5		
1500 Z	Glycol water	-8	186.9	92.2	178.8	97.1	169.5	102.3	161.4	108.1		
		-6	203.6	94.0	195.3	99.0	187.0	104.5	176.9	110.2		
		-4	220.3	95.7	211.6	100.9	202.8	106.5	193.2	112.4		
		-2	240.8	97.9	231.6	103.2	222.3	108.9	212.4	115.0	202.3	121.8
		0	258.8	99.9	249.1	105.3	239.4	111.1	229.2	117.3	218.6	124.1
		2	277.7	102.0	267.5	107.5	257.2	113.4	246.5	119.8	235.3	126.7
	Pure water	5	314.8	106.4	303.7	112.1	292.2	118.2	280.4	124.8	268.1	131.9
		6	325.1	107.7	314.1	113.4	302.1	119.6	289.9	126.3	277.4	133.4
		7	335.7	109.1	323.6	115.0	312.0	121.0	299.6	127.7	286.8	135.0
		8	346.5	110.5	334.6	116.3	322.1	122.5	309.5	129.3	296.4	136.5
		10	371.7	114.1	359.4	119.8	346.3	126.1	332.9	132.9	318.8	140.3
		12	395.0	117.1	381.7	123.0	367.9	129.3	353.9	136.2	339.4	143.7
1500 Z H.P.S.	Glycol water	-8	213.7	98.1	207.7	103.9	201.2	110.0	195.4	117.0		
		-6	230.3	100.0	225.1	106.1	218.7	112.4	210.4	119.2		
		-4	246.9	101.9	241.6	108.1	235.6	114.7	228.9	121.8		
		-2	266.8	104.1	261.3	110.5	255.4	117.4	248.6	124.8	240.8	132.7
		0	284.2	106.0	278.2	112.6	272.2	119.6	265.5	127.2	257.5	135.5
		2	302.4	108.1	296.4	114.9	290.1	122.1	281.9	129.8	274.7	138.4
	Pure water	5	338.2	112.4	331.6	119.8	324.5	127.1	316.6	135.3	308.6	144.2
		6	347.9	113.7	341.2	120.8	334.6	126.0	325.7	136.7	316.8	145.9
		7	358.2	115.0	350.6	122.0	343.7	129.9	335.2	138.3	327.0	147.7
		8	368.3	116.3	361.0	123.6	353.3	131.3	344.6	139.9	336.5	149.2
		10	392.1	119.6	384.4	126.9	376.2	134.9	367.5	143.6	358.2	153.0
		12	413.5	122.5	405.2	129.9	396.6	138.0	386.3	147.4		

Pf : Cooling capacity calculated with :
- water inlet/outlet differential as per curves page 16
- 0.00005 m2 °C/W fouling factor

Pa : Compressors + fans absorbed power

Glycol water is necessary
Low temperature option necessary
EUROVENT conditions

PERFORMANCES

POWERCIAT LX-LXH-LXC
LOW NOISE (LN) - XTRA LOW NOISE (XLN) versions

R407C

LX LXH LXC	Evaporator water oultet temperature °C		CONDENSER AIR INLET TEMPERATURE °C									
			26		29		32		35		38	
			Pf kW	Pa kW	Pf kW	Pa kW	Pf kW	Pa kW	Pf kW	Pa kW	Pf kW	Pa kW
1850 Z	Glycol water	-8	223.0	110.6	213.2	116.3	203.0	122.3	191.5	128.7		
		-6	242.6	113.0	232.2	118.8	221.3	125.1	209.6	131.7		
		-4	262.9	115.5	251.8	121.5	239.9	127.9	227.7	134.6		
		-2	286.6	118.5	275.0	124.9	263.3	131.3	250.5	138.3	237.2	145.5
		0	308.2	121.2	296.1	127.6	283.5	134.4	270.2	141.4	256.4	148.8
		2	330.4	124.0	317.7	130.6	304.6	137.6	290.7	144.8	275.6	152.7
	Pure water	5	374.5	129.9	360.4	136.8	345.6	144.3	330.8	151.8	315.5	159.4
		6	386.6	131.7	372.3	138.6	357.5	145.9	342.2	153.5	326.5	161.4
		7	399.0	133.4	384.5	140.4	369.8	147.9	353.7	155.5	337.6	163.5
		8	412.0	135.3	396.8	142.3	380.0	150.3	365.3	157.5	348.7	165.6
		10	441.5	139.7	425.7	146.9	409.0	154.4	392.4	162.3	375.4	170.3
		12	468.5	143.7	451.0	151.3	434	159	417.0	166.7	398.9	175.1
1850 Z H.P.S.	Glycol water	-8	259.1	117.5	251.6	124.2	243.3	131.4	234.8	137.0		
		-6	280.0	120.3	271.7	129.4	262.6	136.7	253.0	142.3		
		-4	300.1	122.9	291.7	132.5	283.7	140.3	272.5	148.2		
		-2	323.8	126.0	315.8	136.3	306.6	144.2	297.8	152.9	285.4	161.3
		0	345.3	131.8	336.4	139.4	327.4	147.7	317.2	156.6	305.5	165.2
		2	366.3	134.7	358.0	142.9	346.1	150.8	338.4	160.3	327.2	169.7
	Pure water	5	409.8	141.3	399.9	149.8	390.1	158.8	379.5	168.3	367.5	178.0
		6	422.3	139.7	410.7	151.9	401.8	160.9	391.6	166.8	378.6	180.5
		7	433.7	145.1	423.5	153.9	413.4	163.2	401.7	172.9	390.8	178.8
		8	445.4	146.8	436.2	156.3	425.1	165.3	413.4	175.3	401.1	185.4
		10	474.1	152.0	463.8	160.7	452.5	170.6	440.3	180.4	427.9	191.7
		12	499.4	156.0	488.6	165.1	477.1	175.2	464.8	185.5		
2150 Z	Glycol water	-8	266.3	131.1	255.1	137.8	241.6	144.9	228.2	152.4		
		-6	289.0	133.8	276.6	140.7	263.9	148.1	250.3	155.8		
		-4	312.4	136.6	299.3	143.7	285.9	151.2	272.0	159.1		
		-2	340.4	139.9	326.9	147.3	312.7	155.0	298.2	163.1	282.4	171.7
		0	365.6	143.0	351.5	150.5	336.8	158.4	321.4	166.8	305.4	175.3
		2	392.1	146.3	377.1	153.9	361.8	162.0	345.7	170.4	329.0	179.3
	Pure water	5	444.4	153.0	428.2	161.1	410.8	169.3	393.4	178.0	375.4	187.2
		6	459.0	155.0	441.1	163.4	424.6	171.4	406.8	180.2	388.4	189.5
		7	473.8	157.0	456.6	165.1	438.8	173.6	420.3	182.5	401.6	191.8
		8	488.9	159.1	471.2	167.3	453.1	175.8	434.1	184.8	415.0	194.2
		10	524.3	164.1	505.6	172.4	486.2	181.0	466.4	190.2	446.3	199.9
		12	556.9	168.9	537.0	177.1	516.7	185.9	496.1	195.2	474.6	205.1
2150 Z H.P.S.	Glycol water	-8	310.0	140.8	299.8	148.5	291.1	157.0	282.4	167.5		
		-6	332.8	144.7	324.2	153.0	314.8	161.9	304.6	171.6		
		-4	356.0	147.9	347.2	156.5	337.8	165.5	329.7	175.0		
		-2	384.6	151.9	375.1	160.5	365.1	170.0	354.4	179.8	341.5	190.1
		0	408.9	155.0	399.8	164.3	389.4	173.9	378.3	184.1	365.7	194.6
		2	434.7	158.6	425.7	168.4	414.7	178.2	403.0	188.5	390.2	199.3
	Pure water	5	485.8	172.6	475.4	182.4	463.8	192.9	451.2	203.8	438.1	215.4
		6	499.7	174.6	489.3	184.8	477.6	195.3	465.0	206.3	450.8	218.1
		7	513.8	176.6	502.9	186.9	491.9	198.0	478.4	208.9	464.6	220.7
		8	528.3	178.8	517.4	189.3	505.2	200.1	492.5	211.5	478.6	223.7
		10	562.0	177.8	549.7	188.2	537.7	199.7	523.9	211.5	511.8	219.7
		12	592.4	182.5	580.0	193.3	567.2	205.0	551.8	217.6		

Pf : Cooling capacity calculated with :
- water inlet/outlet differential as per curves page 16
- 0.00005 m2 °C/W fouling factor

Pa : Compressors + fans absorbed power

Glycol water is necessary
Low temperature option necessary
EUROVENT conditions

PERFORMANCES

POWERCIAT LX-LXH-LXC
LOW NOISE (LN) - XTRA LOW NOISE (XLN) versions

R407C

LX LXH LXC	Evaporator water oultet temperature °C		CONDENSER AIR INLET TEMPERATURE °C 26 Pf kW	26 Pa kW	29 Pf kW	29 Pa kW	32 Pf kW	32 Pa kW	35 Pf kW	35 Pa kW	38 Pf kW	38 Pa kW
2500 Z	Glycol water	-8	317.5	151.1	301.6	158.4	286.1	166.3	267.9	174.5		
		-6	347.2	154.9	329.6	162.7	312.0	170.4	293.7	178.8		
		-4	376.9	158.7	358.8	166.8	340.6	174.9	320.8	183.3		
		-2	416.0	163.9	398.3	172.2	379.8	181.0	360.8	190.0	340.5	199.0
		0	446.9	167.9	428.4	176.6	409.1	185.5	389.1	194.7	367.5	204.3
		2	479.0	172.3	459.5	181.2	439.4	190.4	418.5	199.7	396.7	209.2
	Pure water	5	541.7	181.2	520.5	190.4	498.4	200.3	475.9	209.8	452.5	219.7
		6	559.1	183.8	537.6	193.1	514.8	203.0	491.9	212.6	468.1	222.7
		7	577.2	186.4	555.1	195.9	532.1	205.6	508.5	215.6	484.0	225.8
		8	595.5	189.2	573.1	198.8	549.1	208.5	524.9	218.6	500.0	228.9
		10	638.6	195.8	614.4	205.4	589.6	215.3	564.1	225.6	538.4	236.4
		12	675.6	202.4	651.9	211.4	625.9	221.4	599.4	231.9	573.7	243.0
2500 Z H.P.S.	Glycol water	-8	371.3	161.3	357.8	169.9	343.2	182.2	326.6	191.7		
		-6	402.5	165.7	386.6	177.8	373.0	187.5	356.3	197.4		
		-4	431.0	169.7	418.2	179.3	402.3	192.7	385.7	202.9		
		-2	471.9	178.6	460.1	187.7	446.0	197.2	430.6	207.1	412.3	216.9
		0	502.5	183.0	490.1	192.4	473.5	202.2	460.3	212.2	442.7	222.6
		2	534.4	187.8	521.4	197.5	507.1	207.5	490.9	217.6	473.2	228.0
	Pure water	5	595.4	197.5	581.2	207.5	565.9	218.3	549.0	228.6	531.3	239.4
		6	612.4	200.3	597.5	210.4	582.2	221.2	565.0	231.7	547.1	242.7
		7	629.3	203.1	615.6	213.5	599.6	224.1	581.9	235.0	563.7	246.1
		8	646.4	206.2	632.4	216.6	616.5	227.2	598.0	238.2	579.5	249.5
		10	688.1	213.4	672.0	223.8	656.9	234.6	638.2	245.9	619.7	257.6
		12	725.5	220.6	708.6	230.4	691.3	241.3	671.9	252.7		
2800 Z	Glycol water	-8	373.0	175.1	357.0	184.0	341.8	193.2	324.0	203.9		
		-6	406.0	178.0	390.0	187.0	372.5	196.9	355.0	207.9		
		-4	438.8	180.5	422.2	190.3	404.6	200.6	386.6	211.6		
		-2	478.9	184.6	461.5	194.6	442.9	205.2	424.1	216.8	404.3	229.3
		0	514.1	188.2	495.7	198.4	476.6	209.2	456.8	221.1	435.8	233.8
		2	551.3	192.1	531.4	202.4	511.6	213.5	490.4	225.6	468.9	238.6
	Pure water	5	624.3	200.4	602.5	210.9	580.3	222.4	557.2	234.9	532.6	248.8
		6	644.7	202.8	622.5	213.4	599.4	224.9	575.8	237.5	551.2	251.5
		7	665.2	205.3	642.7	216.0	619.2	227.7	594.6	240.2	569	253.2
		8	686.8	207.9	663.2	218.6	639.1	230.4	614.1	243.1	588.6	256.9
		10	737.5	214.3	712.4	225.1	685.9	237.5	659.4	250.1	633.0	263.9
		12	783.4	220.3	756.3	231.1	729.4	243.1	701.7	256.1	672.8	270.2
2800 Z H.P.S.	Glycol water	-8	433.0	185.2	425.5	198.2	409.8	210.2	397.0	223.6		
		-6	467.0	189.0	456.4	200.4	442.5	214.6	429.6	225.7		
		-4	500.0	192.6	489.0	204.3	482.0	219.4	464.0	233.2		
		-2	545.5	196.7	535.5	208.8	523.3	224.7	510.5	239.2	496.5	255.2
		0	580.5	200.4	569.6	212.8	558.3	226.4	544.1	244.2	530.9	257.2
		2	616.4	204.4	604.5	220.2	591.9	234.3	580.0	246.2	563.8	266.3
	Pure water	5	685.0	215.6	673.3	229.3	661.9	240.4	645.8	260.3	630.1	277.8
		6	704.5	218.1	692.2	231.8	680.7	243.0	664.2	263.3	648.2	281.0
		7	724.4	220.6	713.5	230.7	697.9	249.7	685.0	262.1	668.7	279.9
		8	744.9	223.3	731.9	237.2	717.3	252.6	704.0	265.1	685.2	287.6
		10	792.2	229.4	780.4	239.6	762.8	259.6	746.6	276.7	729.1	295.6
		12	834.6	235.1	822.4	245.4	806.6	261.1	786.9	283.4		

Pf : Cooling capacity calculated with :
- water inlet/outlet differential as per curves page 16
- 0.00005 m2 °C/W fouling factor

Pa : Compressors + fans absorbed power

Glycol water is necessary
Low temperature option necessary
EUROVENT conditions

PERFORMANCES

POWERCIAT LX-LXH-LXC
LOW NOISE (LN) - XTRA LOW NOISE (XLN) versions

R407C

LX LXH LXC	Evaporator water oultet temperature °C		CONDENSER AIR INLET TEMPERATURE °C									
			26		29		32		35		38	
			Pf kW	Pa kW	Pf kW	Pa kW	Pf kW	Pa kW	Pf kW	Pa kW	Pf kW	Pa kW
3050 Z H.P.S.	Glycol water	-8	**438.3**	209.1	**421.5**	217.5	**413.1**	231.0	**406.1**	248.5		
		-6	**473.9**	211.7	**457.4**	222.9	**442.5**	235.1	**427.6**	252.6		
		-4	**510.7**	216.1	**500.2**	228.4	**483.2**	240.7	**470.4**	255.1		
		-2	**574.0**	223.8	**547.3**	239.0	**537.6**	248.6	**521.2**	262.9	**503.1**	278.0
		0	**607.6**	227.8	**594.3**	245.8	**580.2**	255.0	**557.3**	268.4	**538.1**	283.5
		2	**647.6**	238.1	**635.0**	246.4	**619.8**	260.7	**599.1**	275.1	**577.4**	295.9
	Pure water	5	**742.0**	245.1	**722.3**	258.8	**706.2**	274.0	**685.4**	289.4	**665.5**	306.3
		6	**762.3**	247.9	**747.2**	262.5	**724.2**	277.5	**705.4**	292.9	**688.4**	310.5
		7	**785.5**	251.1	**765.5**	271.3	**748.4**	280.5	**725.0**	303.3	**710.2**	313.9
		8	**808.5**	254.3	**790.8**	268.8	**770.7**	284.1	**746.5**	307.4	**730.5**	317.2
		10	**863.3**	261.9	**844.8**	276.7	**824.0**	292.4	**802.4**	309.3	**777.3**	330.0
		12	**911.7**	268.9	**891.7**	283.8	**866.2**	307.7	**847.8**	315.7		
3400 Z H.P.S.	Glycol water	-8	**495.0**	232.0	**475.0**	241.2	**460.4**	254.3	**452.9**	274.7		
		-6	**531.6**	234.3	**511.2**	246.3	**501.0**	260.8	**479.5**	279.8		
		-4	**575.6**	240.3	**552.8**	252.5	**542.5**	267.4	**510.0**	285.0		
		-2	**644.3**	249.3	**617.6**	261.9	**594.9**	281.4	**579.6**	291.6	**556.6**	307.2
		0	**679.8**	254.0	**657.9**	267.6	**645.2**	283.6	**619.2**	298.2	**594.9**	313.9
		2	**725.3**	260.2	**700.4**	280.3	**686.7**	290.4	**665.1**	306.4	**642.5**	322.7
	Pure water	5	**822.5**	275.2	**803.6**	290.1	**779.0**	305.7	**758.8**	323.3	**731.7**	340.4
		6	**843.6**	280.3	**829.6**	294.0	**805.2**	310.3	**780.9**	327.2	**755.5**	344.3
		7	**870.8**	284.2	**851.0**	299.5	**827.7**	314.0	**803.4**	331.5	**779.5**	349.8
		8	**897.5**	289.3	**875.1**	303.3	**849.5**	318.2	**828.6**	336.3	**801.1**	354.3
		10	**954.2**	300.2	**934.9**	313.9	**910.7**	328.3	**881.4**	356.4	**864.8**	364.2
		12	**1009.4**	313.2	**985.9**	326.1	**962.9**	337.4	**932.8**	366.2		
3750 Z H.P.S.	Glycol water	-8	**552.0**	251.0	**530.3**	263.4	**509.8**	277.3	**490.3**	292.7		
		-6	**588.2**	256.0	**568.4**	269.4	**546.0**	283.5	**523.3**	298.5		
		-4	**635.4**	262.6	**616.2**	282.2	**594.7**	291.6	**574.0**	307.5		
		-2	**704.1**	272.1	**686.3**	287.6	**662.7**	309.3	**642.8**	320.1	**608.5**	334.7
		0	**754.4**	279.2	**733.7**	294.9	**701.8**	316.0	**686.6**	327.7	**656.3**	343.7
		2	**802.8**	293..3	**780.5**	309.5	**762.0**	327.5	**734.2**	336.5	**705.2**	353.4
	Pure water	5	**908.4**	310.3	**883.7**	327.6	**857.2**	345.5	**832.2**	355.1	**801.9**	372.9
		6	**930.6**	314.4	**911.4**	331.6	**888.9**	351.8	**861.5**	360.8	**827.7**	378.7
		7	**956.7**	318.1	**932.2**	336.1	**915.6**	356.0	**881.0**	364.4	**855.9**	384.8
		8	**987.6**	323.9	**963.6**	342.0	**940.7**	360.0	**909.2**	370.6	**879.3**	400.6
		10	**1050.6**	334.3	**1027.1**	353.7	**1002.3**	367.6	**972.4**	381.5	**942.4**	409.8
		12	**1109.1**	344.0	**1082.0**	363.5	**1054.3**	378.8	**1027.7**	393.3		
4200 Z H.P.S.	Glycol water	-8	**655**	301	**629**	316	**605**	333	**581**	352		
		-6	**697**	307	**674**	323	**648**	341	**620**	359		
		-4	**753**	316	**731**	339	**706**	351	**681**	370		
		-2	**835**	327	**814**	346	**786**	371	**763**	384	**722**	402
		0	**894**	335	**869**	354	**833**	379	**815**	394	**778**	414
		2	**952**	352	**925**	372	**904**	394	**871**	405	**836**	424
	Pure water	5	**1077**	372	**1049**	394	**1017**	415	**987**	426	**951**	448
		6	**1104**	377	**1081**	399	**1054**	423	**1022**	433	**982**	454
		7	**1135**	382	**1105**	403	**1087**	427	**1045**	437	**1015**	462
		8	**1172**	389	**1143**	411	**1116**	432	**1078**	445	**1043**	481
		10	**1247**	401	**1218**	425	**1189**	442	**1153**	459	**1117**	492
		12	**1315**	413	**1283**	437	**1250**	455	**1219**	472		

Pf : Cooling capacity calculated with :
- water inlet/outlet differential as per curves page 16
- 0.00005 m2 °C/W fouling factor

Pa : Compressors + fans absorbed power

Glycol water is necessary
Low temperature option necessary
EUROVENT conditions

DESUPERHEATHER EXCHANGER LX - LXH - LXC

The system consists in free hot water supplying thanks to heat recovery on the compressors discharge gas, through an auxiliary desuperheater exchanger.
This optional equipment is only available on request, and factory mounted.

Diagram of the refrigerant circuit

The following refrigeration diagram describes an example of a CIAT unit, with desuperheater (on each refrigerant circuit).
The heat recovery is possible only if the machine is running.
For the same cooling or heating capacity, the desuperheater system allows a free heating of hot water with a reduction of the total input power of the machine.

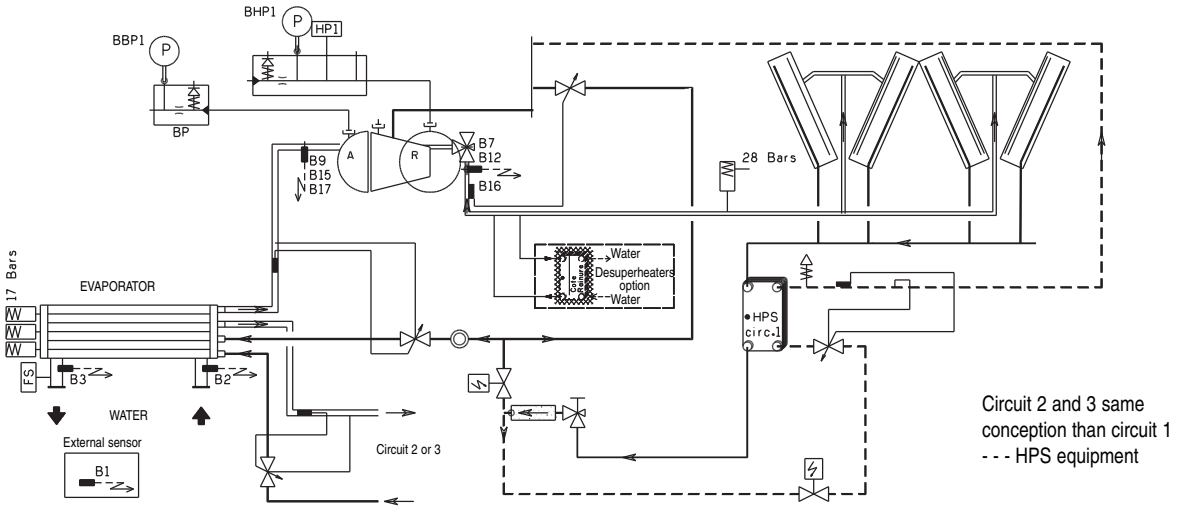

Principle and precautions of hydraulic connection

To start and run the machine under good conditions, the circuit must be as short as possible, and the water flow of the desuperheater must start slowly to normal operating condition, with a water flow equal to 10% of its standard value, and must be calculated for a hot water inlet temperature of **+50°C**.
Thus, it is recommended to have a hydraulic diagram making it possible to obtain very quickly a hot water at the inlet of the desuperheater (3-way valve + controller + temperature sensor on the exchanger water inlet)
The controller set point must be adjusted to +50°C minimum.
Note: pay attention to the selection of the expansion tank, because the recovery water circuit can reach the temperature of 115°C in the event of circulator stop or non hot water consumption.

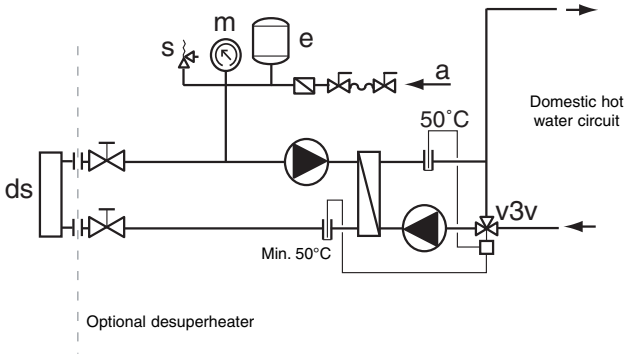

Recovery example on desuperheater

POWERCIAT LX - LXH - LXC	Cooling capacity Pf (kW)	Absorbed power Pa (kW)	Recovery Pr (kW)	Water flow qv (m³/h)	Pressure drop dP (mCE)
1200Z	236	101	59	10.1	0.31
1200Z HPS	261	110	65	11.2	0.39
1500Z	305	129	76	13.1	0.53
1500Z HPS	338	140	85	14.6	0.66
1850Z	362	156	90	15.5	0.74
1850Z HPS	409	172	102	17.5	0.95
2150Z	429	184	107	18.4	0.68
2150Z HPS	486	202	122	21.0	0.88
2500Z	522	216	131	22.5	1.01
2500Z HPS	594	238	148	25.5	1.30
2800Z	605	244	151	26.0	1.35
2800Z HPS	590	268	173	29.8	1.78
3050Z HPS	740	287	185	31.8	0.90
3400Z HPS	820	320	205	35.3	1.11
3750Z HPS	903	362	226	38.9	1.35
4200Z HPS	1076	413	269	46.3	1.91

Note : heat recovery performances for :
➨ machine running in full load, chilled water = +12/+7°C and outside air = +35°C°C
➨ hot water temperature on recovery = +55/+60°C

PARTIAL HEAT RECOVERY CAPACITY

R407C High Performance

LX LXC LXH	Desuperheater water inlet and outlet temperature in °C	Evaporator water outlet temp. °C	TEMPÉRATURE D'ENTREE D'AIR AU CONDENSEUR °C																							
			26				29				32				35				38				41			
			Pf kW	Pa kW	Pde kW	Qde m³/h	Pf kW	Pa kW	Pde kW	Qde m³/h	Pf kW	Pa kW	Pde kW	Qde m³/h	Pf kW	Pa kW	Pde kW	Qde m³/h	Pf kW	Pa kW	Pde kW	Qde m³/h	Pf kW	Pa kW	Pde kW	Qde m³/h
1200 Z	50 °C / 55 °C	5	246	85	37	6	238	89	48	8	229	94	57	10	220	99	66	11	210	105	74	13	201	111	80	14
		6	255	86	38	7	246	90	49	8	237	95	59	10	227	100	68	12	218	106	76	13	208	112	83	14
		7	263	87	39	7	254	91	51	9	245	96	61	11	235	102	71	12	225	107	79	14	215	114	86	15
		8	272	88	41	7	262	92	52	9	253	97	63	11	243	103	73	13	233	108	82	14	222	115	89	15
		10	292	91	44	8	282	95	56	10	272	100	68	12	262	105	79	14	252	111	88	15	241	117	96	17
		12	310	93	47	8	300	98	60	10	289	103	72	12	279	108	84	14	269	114	94	16	258	121	103	18
	55 °C / 60 °C	5	246	85	25	4	238	89	36	6	229	94	46	8	220	99	55	9	210	105	63	11	201	111	70	12
		6	255	86	26	4	246	90	37	6	237	95	47	8	227	100	57	10	218	106	65	11	208	112	73	13
		7	263	87	26	5	254	91	38	7	245	96	49	8	235	102	59	10	225	107	68	12	215	114	75	13
		8	272	88	27	5	262	92	39	7	253	97	51	9	243	103	61	10	233	108	70	12	222	115	78	13
		10	292	91	29	5	282	95	42	7	272	100	54	9	262	105	66	11	252	111	76	13	241	117	84	15
		12	310	93	31	5	300	98	45	8	289	103	58	10	279	108	70	12	269	114	81	14	258	121	90	16
1200 Z HPS	50 °C / 55 °C	5	263	90	39	7	259	94	52	9	253	100	63	11	247	106	74	13	239	115	84	14	233	120	93	16
		6	272	89	41	7	265	96	53	9	260	102	65	11	254	107	76	13	247	116	86	15	241	121	96	17
		7	279	92	42	7	274	96	55	9	268	102	67	12	261	110	78	13	254	117	89	15	247	125	99	17
		8	287	93	43	7	281	99	56	10	276	103	69	12	269	109	81	14	262	116	92	16	254	126	102	17
		10	306	95	46	8	300	101	60	10	294	105	74	13	286	115	86	15	280	119	98	17	272	127	109	19
		12	323	98	48	8	316	103	63	11	309	110	77	13	302	117	91	16	296	122	104	18				
	55 °C / 60 °C	5	263	90	26	5	259	94	39	7	253	100	51	9	247	106	62	11	239	115	72	12	233	120	82	14
		6	272	89	27	5	265	96	40	7	260	102	52	9	254	107	64	11	247	116	74	13	241	121	84	15
		7	279	92	28	5	274	96	41	7	268	102	54	9	261	110	65	11	254	117	76	13	247	125	86	15
		8	287	93	29	5	281	99	42	7	276	103	55	9	269	109	67	12	262	116	79	14	254	126	89	15
		10	306	95	31	5	300	101	45	8	294	105	59	10	286	115	72	12	280	119	84	14	272	130	95	16
		12	323	98	32	6	316	103	47	8	309	110	62	11	302	117	76	13	296	122	89	15				
1500 Z	50 °C / 55 °C	5	319	109	48	8	308	114	62	11	296	120	74	13	285	127	86	15	273	134	96	16	261	141	104	18
		6	330	110	50	9	318	116	64	11	307	122	77	13	295	128	89	15	282	135	99	17	270	143	108	19
		7	341	111	51	9	329	117	66	11	317	123	79	14	305	130	92	16	292	137	102	18	279	144	112	19
		8	352	113	53	9	340	118	68	12	327	124	82	14	315	131	95	16	302	138	106	18	289	146	116	20
		10	378	116	57	10	365	121	73	13	352	128	88	15	339	134	102	17	325	141	114	20	312	149	125	21
		12	402	119	60	10	389	124	78	13	374	131	94	16	361	137	108	19	346	144	121	21	332	152	133	23
	55 °C / 60 °C	5	319	109	32	5	308	114	46	8	296	120	59	10	285	127	71	12	273	134	82	14	261	141	91	16
		6	330	110	33	6	318	116	48	8	307	122	61	11	295	128	74	13	282	135	85	15	270	143	95	16
		7	341	111	34	6	329	117	49	8	317	123	63	11	305	130	76	13	292	137	88	15	279	144	98	17
		8	352	113	35	6	340	118	51	9	327	124	65	11	315	131	79	14	302	138	91	16	289	146	101	17
		10	378	116	38	7	365	121	55	9	352	128	70	12	339	134	85	15	325	141	98	17	312	149	109	19
		12	402	119	40	7	389	124	58	10	374	131	75	13	361	137	90	16	346	144	104	18	332	152	116	20
1500 Z HPS	50 °C / 55 °C	5	340	115	51	9	333	122	67	11	327	127	82	14	319	137	96	16	311	146	109	19	302	155	121	21
		6	350	116	53	9	343	123	69	12	336	130	84	14	329	136	99	17	320	147	112	19	311	157	124	21
		7	360	117	54	9	353	124	71	12	346	132	87	15	338	140	101	17	329	149	115	20	321	159	128	22
		8	370	119	56	10	363	126	73	12	355	133	89	15	348	141	104	18	339	150	119	20	330	160	132	23
		10	394	121	59	10	387	129	77	13	379	136	95	16	370	145	111	19	362	154	127	22	353	152	141	24
		12	416	124	62	11	408	132	82	14	400	139	100	17	391	148	117	20	381	157	133	23				
	55 °C / 60 °C	5	340	115	34	6	333	122	50	9	327	127	65	11	319	137	80	14	311	146	93	16	302	155	106	18
		6	350	116	35	6	343	123	51	9	336	130	67	12	329	136	82	14	320	147	96	17	311	157	109	19
		7	360	117	36	6	353	124	53	9	346	132	69	12	338	140	85	15	329	149	99	17	321	159	112	19
		8	370	119	37	6	363	126	54	9	355	133	71	12	348	141	87	15	339	150	102	17	330	160	116	20
		10	394	121	39	7	387	129	58	10	379	136	76	13	370	145	93	16	362	154	109	19	353	162	124	21
		12	416	124	42	7	408	132	61	11	400	139	80	14	391	148	98	17	381	157	114	20				

Pf : Cooling capacity valid a DT according to operating limitst
Pa : Compressors + fans absorbed power
Pde: Desuperheater heating capacity recovered
Qde : Desuperheater water flow

POWERCIAT LX R407C

PARTIAL HEAT RECOVERY CAPACITY

R407C High Performance

LX LXC LXH	Desuperheater water inlet and outlet temperature in °C	Evaporator water outlet temp. °C	TEMPÉRATURE D'ENTREE D'AIR AU CONDENSEUR °C																							
			26				29				32				35				38				41			
			Pf kW	Pa kW	Pde kW	Qde m³/h	Pf kW	Pa kW	Pde kW	Qde m³/h	Pf kW	Pa kW	Pde kW	Qde m³/h	Pf kW	Pa kW	Pde kW	Qde m³/h	Pf kW	Pa kW	Pde kW	Qde m³/h	Pf kW	Pa kW	Pde kW	Qde m³/h
1850 Z	50 °C / 55 °C	5	380	131	57	10	367	138	73	13	353	145	88	15	338	153	101	17	323	160	113	19	307	168	123	21
		6	394	133	59	10	380	140	76	13	365	147	91	16	350	154	105	18	334	162	117	20	318	171	127	22
		7	406	135	61	10	392	141	78	13	377	149	94	16	361	156	108	19	345	164	121	21	329	173	132	23
		8	420	136	63	11	405	143	81	14	389	150	97	17	374	158	112	19	357	166	125	21	340	174	136	23
		10	451	140	68	12	435	147	87	15	419	155	105	18	402	162	121	21	383	171	134	23	367	179	147	25
		12	479	144	72	12	463	151	93	16	445	158	111	19	428	166	128	22	410	175	144	25	392	183	157	27
	55 °C / 60 °C	5	380	131	38	7	367	138	55	9	353	145	71	12	338	153	85	15	323	160	97	17	307	168	107	18
		6	394	133	39	7	380	140	57	10	365	147	73	13	350	154	88	15	334	162	100	17	318	171	111	19
		7	406	135	41	7	392	141	59	10	377	149	75	13	361	156	90	16	345	164	104	18	329	173	115	20
		8	420	136	42	7	405	143	61	10	389	150	78	13	374	158	94	16	357	166	107	18	340	174	119	20
		10	451	140	45	8	435	147	65	11	419	155	84	14	402	162	101	17	383	171	115	20	367	179	128	22
		12	479	144	48	8	463	151	69	12	445	158	89	15	428	166	107	18	410	175	123	21	392	183	137	24
1850 Z HPS	50 °C / 55 °C	5	414	141	62	11	405	150	81	14	396	158	99	17	386	168	116	20	374	178	131	23	362	187	145	25
		6	426	143	64	11	417	151	83	14	408	160	102	18	397	170	119	20	385	179	135	23	373	189	149	26
		7	438	145	66	11	429	153	86	15	419	162	105	18	408	172	122	21	397	182	139	24	385	192	154	26
		8	451	146	68	12	442	155	88	15	432	164	108	19	420	174	126	22	409	184	143	25	396	194	158	27
		10	481	147	72	12	470	159	94	16	460	169	115	20	448	179	134	23	436	189	153	26	423	198	169	29
		12	506	154	76	13	496	163	99	17	484	173	121	21	473	183	142	24	460	193	161	28				
	55 °C / 60 °C	5	414	141	41	7	405	150	61	10	396	158	79	14	386	168	97	17	374	178	112	19	362	187	127	22
		6	426	143	43	7	417	151	63	11	408	160	82	14	397	170	99	17	385	179	116	20	373	189	131	22
		7	438	145	44	8	429	153	64	11	419	162	84	14	408	172	102	18	397	182	119	20	385	192	135	23
		8	451	146	45	8	442	155	66	11	432	164	86	15	420	174	105	18	409	184	123	21	396	194	139	24
		10	481	147	48	8	470	159	71	12	460	169	92	16	448	179	112	19	436	189	131	22	423	200	148	25
		12	506	154	51	9	496	163	74	13	484	173	97	17	473	183	118	20	460	193	138	24				
2150 Z	50 °C / 55 °C	5	452	156	68	12	435	164	87	15	419	172	105	18	401	181	120	21	383	190	134	23	365	199	146	25
		6	467	157	70	12	450	165	90	15	433	174	108	19	415	183	125	21	397	192	139	24	378	201	151	26
		7	482	159	72	12	465	167	93	16	447	176	112	19	429	185	129	22	410	194	144	25	391	204	156	27
		8	498	161	75	13	480	169	96	17	462	178	116	20	442	187	133	23	424	196	148	26	405	206	162	28
		10	535	166	80	14	516	174	103	18	497	183	124	21	477	192	143	25	457	201	160	28	436	211	174	30
		12	569	170	85	15	549	178	110	19	527	188	132	23	508	196	152	26	487	206	170	29	465	216	186	32
	55 °C / 60 °C	5	452	156	45	8	435	164	65	11	419	172	84	14	401	181	100	17	383	190	115	20	365	199	128	22
		6	467	157	47	8	450	165	68	12	433	174	87	15	415	183	104	18	397	192	119	20	378	201	132	23
		7	482	159	48	8	465	167	70	12	447	176	89	15	429	185	107	18	410	194	123	21	391	204	137	24
		8	498	161	50	9	480	169	72	12	462	178	92	16	442	187	111	19	424	196	127	22	405	206	142	24
		10	535	166	54	9	516	174	77	13	497	183	99	17	477	192	119	21	457	201	137	24	436	211	153	26
		12	569	170	57	10	549	178	82	14	527	188	105	18	508	196	127	22	487	206	146	25	465	216	163	28
2150 Z HPS	50 °C / 55 °C	5	490	167	74	13	481	177	96	17	470	187	118	20	458	198	137	24	445	209	156	27	431	221	172	30
		6	505	169	76	13	495	179	99	17	484	190	121	21	471	200	141	24	459	212	161	28	445	224	178	31
		7	520	171	78	13	510	181	102	18	498	192	125	21	486	202	146	25	473	214	166	28	458	226	183	32
		8	535	173	80	14	524	183	105	18	512	194	128	22	499	205	150	26	486	217	170	29	474	225	190	33
		10	569	177	85	15	557	188	111	19	546	199	137	23	533	211	160	28	518	223	181	31	506	231	202	35
		12	600	182	90	15	589	192	118	20	576	203	144	25	562	215	169	29	547	228	191	33				
	55 °C / 60 °C	5	490	167	49	8	481	177	72	12	470	187	94	16	458	198	115	20	445	209	134	23	431	221	151	26
		6	505	169	51	9	495	179	74	13	484	190	97	17	471	200	118	20	459	212	138	24	445	224	156	27
		7	520	171	52	9	510	181	77	13	498	192	100	17	486	202	122	21	473	214	142	24	458	226	160	28
		8	535	173	54	9	524	183	79	14	512	194	102	18	499	205	125	21	486	217	146	25	474	225	166	29
		10	569	177	57	10	557	188	84	14	546	199	109	19	533	211	133	23	518	223	155	27	506	231	177	31
		12	600	182	60	10	589	192	88	15	576	203	115	20	562	215	141	24	547	228	164	28				

Pf : Cooling capacity valid a DT according to operating limitst
Pa : Compressors + fans absorbed power
Pde: Desuperheater heating capacity recovered
Qde : Desuperheater water flow

PARTIAL HEAT RECOVERY CAPACITY

R407C High Performance

LX LXC LXH	Desuperheater water inlet and outlet temperature in °C	Evaporator water outlet temp. °C	TEMPÉRATURE D'ENTREE D'AIR AU CONDENSEUR °C																							
			26				29				32				35				38				41			
			Pf kW	Pa kW	Pde kW	Qde m³/h	Pf kW	Pa kW	Pde kW	Qde m³/h	Pf kW	Pa kW	Pde kW	Qde m³/h	Pf kW	Pa kW	Pde kW	Qde m³/h	Pf kW	Pa kW	Pde kW	Qde m³/h	Pf kW	Pa kW	Pde kW	Qde m³/h
2500 Z	50 °C / 55 °C	5	553	183	83	14	532	192	106	18	510	201	128	22	488	211	146	25	464	221	162	28	440	231	176	30
		6	571	185	86	15	550	194	110	19	527	204	132	23	504	213	151	26	481	224	168	29	456	234	182	31
		7	590	187	89	15	568	196	114	20	545	206	136	23	522	216	157	27	497	227	174	30	472	237	189	32
		8	609	190	91	16	586	199	117	20	563	209	141	24	539	219	162	28	513	230	180	31	489	240	196	34
		10	654	196	98	17	630	205	126	22	606	215	152	26	580	225	174	30	554	236	194	33	528	247	211	36
		12	695	201	104	18	669	211	134	23	644	221	161	28	617	231	185	32	590	242	207	36	564	253	226	39
	55 °C / 60 °C	5	553	183	55	10	532	192	80	14	510	201	102	18	488	211	122	21	464	221	139	24	440	231	154	26
		6	571	185	57	10	550	194	83	14	527	204	105	18	504	213	126	22	481	224	144	25	456	234	160	27
		7	590	187	59	10	568	196	85	15	545	206	109	19	522	216	131	22	497	227	149	26	472	237	165	28
		8	609	190	61	10	586	199	88	15	563	209	113	19	539	219	135	23	513	230	154	26	489	240	171	29
		10	654	196	65	11	630	205	95	16	606	215	121	21	580	225	145	25	554	236	166	29	528	247	185	32
		12	695	201	70	12	669	211	100	17	644	221	129	22	617	231	154	27	590	242	177	30	564	253	197	34
2500 Z HPS	50 °C / 55 °C	5	605	203	91	16	591	220	118	20	576	232	144	25	560	245	168	29	542	257	190	33	524	254	210	36
		6	622	206	93	16	607	223	121	21	593	235	148	25	576	247	173	30	559	260	196	34	540	257	216	37
		7	640	208	96	17	626	219	125	22	610	238	153	26	593	250	178	31	576	264	202	35	556	261	222	38
		8	658	210	99	17	642	228	128	22	627	240	157	27	611	254	183	32	593	267	208	36	573	264	229	39
		10	699	212	105	18	684	224	137	24	667	238	167	29	651	250	195	34	632	264	221	38	618	272	247	43
		12	737	217	111	19	722	230	144	25	704	243	176	30	687	257	206	35	667	271	233	40				
	55 °C / 60 °C	5	605	203	61	10	591	220	89	15	576	232	115	20	560	245	140	24	542	257	163	28	524	254	183	32
		6	622	206	62	11	607	223	91	16	593	235	119	20	576	247	144	25	559	260	168	29	540	257	189	33
		7	640	208	64	11	626	219	94	16	610	238	122	21	593	250	148	25	576	264	173	30	556	261	195	33
		8	658	210	66	11	642	228	96	17	627	240	125	22	611	254	153	26	593	267	178	31	573	264	201	34
		10	699	212	70	12	684	224	103	18	667	238	133	23	651	250	163	28	632	264	190	33	618	272	216	37
		12	737	217	74	13	722	230	108	19	704	243	141	24	687	257	172	30	667	271	200	34				
2800 Z	50 °C / 55 °C	5	632	206	95	16	610	216	122	21	588	228	147	25	565	240	170	29	542	253	190	33	518	267	207	36
		6	653	208	98	17	631	219	126	22	608	230	152	26	584	243	175	30	560	255	196	34	536	270	214	37
		7	675	210	101	17	652	221	130	22	628	232	157	27	604	245	181	31	580	258	203	35	554	272	222	38
		8	697	213	105	18	673	223	135	23	649	235	162	28	624	247	187	32	599	261	210	36	573	275	229	39
		10	749	219	112	19	724	230	145	25	698	241	175	30	672	253	202	35	645	267	226	39	617	282	247	42
		12	796	224	119	21	769	235	154	26	742	247	186	32	715	259	215	37	686	273	240	41	658	288	263	45
	55 °C / 60 °C	5	632	206	63	11	610	216	92	16	588	228	118	20	565	240	141	24	542	253	163	28	518	267	181	31
		6	653	208	65	11	631	219	95	16	608	230	122	21	584	243	146	25	560	255	168	29	536	270	188	32
		7	675	210	68	12	652	221	98	17	628	232	126	22	604	245	151	26	580	258	174	30	554	272	194	33
		8	697	213	70	12	673	223	101	17	649	235	130	22	624	247	156	27	599	261	180	31	573	275	201	34
		10	749	219	75	13	724	230	109	19	698	241	140	24	672	253	168	29	645	267	194	33	617	282	216	37
		12	796	224	80	14	769	235	115	20	742	247	148	26	715	259	179	31	686	273	206	35	658	288	230	40
2800 Z HPS	50 °C / 55 °C	5	690	219	104	18	680	229	136	23	666	247	167	29	654	259	196	34	637	279	223	38	620	297	248	43
		6	710	222	107	18	700	232	140	24	685	249	171	29	670	265	201	35	658	278	230	40	641	296	256	44
		7	730	224	110	19	717	237	143	25	704	252	176	30	690	268	207	36	676	286	237	41	659	299	264	45
		8	750	226	113	19	740	236	148	25	724	254	181	31	711	266	213	37	693	289	243	42	677	307	271	47
		10	798	232	120	21	785	246	157	27	771	261	193	33	758	272	227	39	738	295	258	44	720	315	288	50
		12	841	237	126	22	828	251	166	28	812	266	203	35	799	278	240	41	781	296	273	47				
	55 °C / 60 °C	5	690	219	69	12	680	229	102	18	666	247	133	23	654	259	164	28	637	279	191	33	620	297	217	37
		6	710	222	71	12	700	232	105	18	685	249	137	24	670	265	168	29	658	278	197	34	641	296	224	39
		7	730	224	73	13	717	237	108	18	704	252	141	24	690	268	173	30	676	286	203	35	659	299	231	40
		8	750	226	75	13	740	236	111	19	724	254	145	25	711	266	178	31	693	289	208	36	677	307	237	41
		10	798	232	80	14	785	246	118	20	771	261	154	27	758	272	190	33	738	295	221	38	720	315	252	43
		12	841	237	84	14	828	251	124	21	812	266	162	28	799	278	200	34	781	296	234	40				

Pf : Cooling capacity valid a DT according to operating limitst
Pa : Compressors + fans absorbed power
Pde: Desuperheater heating capacity recovered
Qde : Desuperheater water flow

POWERCIAT LX R407C

PARTIAL HEAT RECOVERY CAPACITY

R407C
High Performance

LX LXC LXH	Desuperheater water inlet and outlet temperature in °C	Evaporator water outlet temp. °C	TEMPÉRATURE D'ENTREE D'AIR AU CONDENSEUR °C																							
			26				29				32				35				38				41			
			Pf kW	Pa kW	Pde kW	Qde m³/h	Pf kW	Pa kW	Pde kW	Qde m³/h	Pf kW	Pa kW	Pde kW	Qde m³/h	Pf kW	Pa kW	Pde kW	Qde m³/h	Pf kW	Pa kW	Pde kW	Qde m³/h	Pf kW	Pa kW	Pde kW	Qde m³/h
3050 Z HPS	50 °C / 55 °C	5	753	238	113	19	733	251	147	25	718	266	180	31	695	281	209	36	680	298	238	41	644	317	258	44
		6	771	240	116	20	758	253	152	26	739	269	185	32	719	285	216	37	699	301	245	42	678	321	271	47
		7	796	243	119	21	778	256	156	27	761	272	190	33	740	288	222	38	717	304	251	43	698	324	279	48
		8	819	246	123	21	797	259	159	27	782	275	196	34	762	291	229	39	740	308	259	45	720	328	288	50
		10	875	260	131	23	857	271	171	29	837	282	209	36	816	299	245	42	794	316	278	48	773	336	309	53
		12	921	266	138	24	906	277	181	31	884	289	221	38	862	305	259	44	841	322	294	51				
	55 °C / 60 °C	5	753	238	75	13	733	251	110	19	718	266	144	25	695	281	174	30	680	298	204	35	644	317	225	39
		6	771	240	77	13	758	253	114	20	739	269	148	25	719	285	180	31	699	301	210	36	678	321	237	41
		7	796	243	80	14	778	256	117	20	761	272	152	26	740	288	185	32	717	304	215	37	698	324	244	42
		8	819	246	82	14	797	259	120	21	782	275	156	27	762	291	191	33	740	308	222	38	720	328	252	43
		10	875	260	88	15	857	271	129	22	837	282	167	29	816	299	204	35	794	316	238	41	773	336	271	47
		12	921	266	92	16	906	277	136	23	884	289	177	30	862	305	216	37	841	322	252	43				
3400 Z HPS	50 °C / 55 °C	5	833	264	125	21	814	280	163	28	793	296	198	34	776	314	233	40	746	330	261	45	725	343	290	50
		6	858	268	129	22	838	283	168	29	814	306	204	35	795	317	239	41	773	335	271	47	748	350	299	51
		7	884	271	133	23	865	287	173	30	844	312	211	36	819	321	246	42	793	338	278	48	770	357	308	53
		8	907	276	136	23	890	290	178	31	868	315	217	37	844	324	253	44	819	343	287	49	800	363	320	55
		10	971	285	146	25	948	308	190	33	929	324	232	40	903	334	271	47	877	353	307	53	856	374	342	59
		12	1026	296	154	26	1000	315	200	34	981	334	245	42	952	343	286	49	928	361	325	56				
	55 °C / 60 °C	5	833	264	83	14	814	280	122	21	793	296	159	27	776	314	194	33	746	330	224	38	725	343	254	44
		6	858	268	86	15	838	283	126	22	814	306	163	28	795	317	199	34	773	335	232	40	748	350	262	45
		7	884	271	88	15	865	287	130	22	844	312	169	29	819	321	205	35	793	338	238	41	770	357	270	46
		8	907	276	91	16	890	290	134	23	868	315	174	30	844	324	211	36	819	343	246	42	800	363	280	48
		10	971	285	97	17	948	308	142	24	929	324	186	32	903	334	226	39	877	353	263	45	856	374	300	52
		12	1026	296	103	18	1000	315	150	26	981	334	196	34	952	343	238	41	928	361	278	48				
3750 Z HPS	50 °C / 55 °C	5	921	291	138	24	898	313	180	31	874	334	219	38	844	353	253	44	828	370	290	50	789	379	316	54
		6	948	294	142	24	929	320	186	32	904	339	226	39	872	357	262	45	850	374	298	51	817	384	327	56
		7	976	298	146	25	955	324	191	33	929	343	232	40	902	362	271	47	878	379	307	53	843	387	337	58
		8	1005	302	151	26	981	329	196	34	949	347	237	41	929	367	279	48	900	383	315	54	870	391	348	60
		10	1069	320	160	28	1045	339	209	36	1019	358	255	44	995	378	299	51	967	392	338	58	943	403	377	65
		12	1132	331	170	29	1102	347	220	38	1077	367	269	46	1047	388	314	54	1020	411	357	61				
	55 °C / 60 °C	5	921	291	92	16	898	313	135	23	874	334	175	30	844	353	211	36	828	370	248	43	789	379	276	47
		6	948	294	95	16	929	320	139	24	904	339	181	31	872	357	218	37	850	374	255	44	817	384	286	49
		7	976	298	98	17	955	324	143	25	929	343	186	32	902	362	226	39	878	379	263	45	843	387	295	51
		8	1005	302	101	17	981	329	147	25	949	347	190	33	929	367	232	40	900	383	270	46	870	391	305	52
		10	1069	320	107	18	1045	339	157	27	1019	358	204	35	995	378	249	43	967	392	290	50	943	403	330	57
		12	1132	331	113	19	1102	347	165	28	1077	367	215	37	1047	388	262	45	1020	411	306	53				
4200 Z HPS	50 °C / 55 °C	5	1099	332	165	28	1070	357	214	37	1041	381	260	45	1006	403	302	52	987	422	316	54	940	432	376	65
		6	1130	335	170	29	1101	365	220	38	1078	387	270	46	1039	407	312	54	1013	427	324	56	974	438	390	67
		7	1163	340	174	30	1138	370	228	39	1108	391	277	48	1076	413	323	56	1046	432	335	58	1005	442	402	69
		8	1198	345	180	31	1169	375	234	40	1132	396	283	49	1108	419	332	57	1074	437	344	59	1038	446	415	71
		10	1274	365	191	33	1246	387	249	43	1215	408	304	52	1187	431	356	61	1152	447	369	63	1125	460	450	77
		12	1349	378	202	35	1314	396	263	45	1283	419	321	55	1249	443	375	64	1217	469	389	67				
	55 °C / 60 °C	5	1099	332	110	19	1070	357	161	28	1041	381	208	36	1006	403	252	43	987	422	296	51	940	432	329	57
		6	1130	335	113	19	1101	365	165	28	1078	387	216	37	1039	407	260	45	1013	427	304	52	974	438	341	59
		7	1163	340	116	20	1138	370	171	29	1108	391	222	38	1076	413	269	46	1046	432	314	54	1005	442	352	61
		8	1198	345	120	21	1169	375	175	30	1132	396	226	39	1108	419	277	48	1074	437	322	55	1038	446	363	62
		10	1274	365	127	22	1246	387	187	32	1215	408	243	42	1187	431	297	51	1152	447	346	59	1125	460	394	68
		12	1349	378	135	23	1314	396	197	34	1283	419	257	44	1249	443	312	54	1217	469	365	63				

Pf : Cooling capacity valid a DT according to operating limitst
Pa : Compressors + fans absorbed power
Pde: Desuperheater heating capacity recovered
Qde : Desuperheater water flow

PARTIAL HEAT RECOVERY CAPACITY

R407C

Low Noise - Xtra Low Noise

LX LXC LXH	Desuperheater water inlet and outlet temperature in °C	Evaporator water outlet temp. °C	TEMPÉRATURE D'ENTREE D'AIR AU CONDENSEUR °C																			
			26				29				32				35				38			
			Pf kW	Pa kW	Pde kW	Qde m³/h	Pf kW	Pa kW	Pde kW	Qde m³/h	Pf kW	Pa kW	Pde kW	Qde m³/h	Pf kW	Pa kW	Pde kW	Qde m³/h	Pf kW	Pa kW	Pde kW	Qde m³/h
1200 Z	50 °C / 55 °C	5	242	83,8	36	6,2	234	88,4	47	8,0	225	93,3	56	9,7	215	98,8	65	11,1	206	104,4	72	12,4
		6	250	84,9	38	6,5	241	89,5	48	8,3	232	94,5	58	10,0	222	99,9	67	11,5	213	105,6	75	12,8
		7	258	86,0	39	6,7	249	90,6	50	8,6	240	95,7	60	10,3	230	101,1	69	11,9	220	106,9	77	13,2
		8	267	87,2	40	6,9	257	91,8	51	8,8	247	96,9	62	10,6	238	102,4	71	12,3	227	108,2	79	13,7
		10	286	90,0	43	7,4	276	94,8	55	9,5	266	99,9	67	11,4	256	105,4	77	13,2	245	111,4	86	14,7
		12	304	92,6	46	7,8	292	97,9	58	10,0	282	102,6	71	12,1	271	108,1	81	14,0	260	114,1	91	15,7
	55 °C / 60 °C	5	242	83,8	24	4,2	234	88,4	35	6,0	225	93,3	45	7,7	215	98,8	54	9,2	206	104,4	62	10,6
		6	250	84,9	25	4,3	241	89,5	36	6,2	232	94,5	46	8,0	222	99,9	56	9,5	213	105,6	64	11,0
		7	258	86,0	26	4,4	249	90,6	37	6,4	240	95,7	48	8,3	230	101,1	58	9,9	220	106,9	66	11,4
		8	267	87,2	27	4,6	257	91,8	39	6,6	247	96,9	49	8,5	238	102,4	60	10,2	227	108,2	68	11,7
		10	286	90,0	29	4,9	276	94,8	41	7,1	266	99,9	53	9,2	256	105,4	64	11,0	245	111,4	74	12,6
		12	304	92,6	30	5,2	292	97,9	44	7,5	282	102,6	56	9,7	271	108,1	68	11,7	260	114,1	78	13,4
1200 Z HPS	50 °C / 55 °C	5	261	88,0	39	6,7	256	93,6	51	8,8	249	101,7	62	10,7	243	106,3	73	12,5	236	113,4	83	14,2
		6	269	89,0	40	6,9	262	96,5	52	9,0	256	102,8	64	11,0	250	109,6	75	12,9	244	114,8	85	14,7
		7	277	90,1	42	7,1	270	97,8	54	9,3	264	102,0	66	11,4	258	108,9	77	13,3	250	116,1	88	15,1
		8	284	91,2	43	7,3	278	99,2	56	9,6	271	105,4	68	11,7	264	112,3	79	13,6	257	119,8	90	15,5
		10	303	93,9	45	7,8	296	101,9	59	10,2	289	108,4	72	12,4	282	115,6	85	14,6	274	123,4	96	16,5
		12	318	98,7	48	8,2	312	104,6	62	10,7	305	111,2	76	13,1	297	118,5	89	15,3				
	55 °C / 60 °C	5	261	88,0	26	4,5	256	93,6	38	6,6	249	101,7	50	8,6	243	106,3	61	10,4	236	113,4	71	12,2
		6	269	89,0	27	4,6	262	96,5	39	6,8	256	102,8	51	8,8	250	109,6	63	10,8	244	114,8	73	12,6
		7	277	90,1	28	4,8	270	97,8	41	7,0	264	102,0	53	9,1	258	108,9	65	11,1	250	116,1	75	12,9
		8	284	91,2	28	4,9	278	99,2	42	7,2	271	105,4	54	9,3	264	112,3	66	11,4	257	119,8	77	13,3
		10	303	93,9	30	5,2	296	101,9	44	7,6	289	108,4	58	9,9	282	115,6	71	12,1	274	123,4	82	14,1
		12	318	98,7	32	5,5	312	104,6	47	8,0	305	111,2	61	10,5	297	118,5	74	12,8				
1500 Z	50 °C / 55 °C	5	314	106,4	47	8,1	303	112,1	61	10,4	292	118,2	73	12,6	280	124,8	84	14,4	268	131,9	94	16,1
		6	325	107,7	49	8,4	314	113,4	63	10,8	302	119,6	76	13,0	289	126,3	87	14,9	277	133,4	97	16,7
		7	335	109,1	50	8,6	323	115,0	65	11,1	312	121,0	78	13,4	299	127,7	90	15,4	286	135,0	100	17,2
		8	346	110,5	52	8,9	334	116,3	67	11,5	322	122,5	81	13,8	309	129,3	93	15,9	296	136,5	104	17,8
		10	371	114,1	56	9,6	359	119,8	72	12,3	346	126,1	87	14,9	332	132,9	100	17,1	318	140,3	111	19,1
		12	395	117,1	59	10,2	381	123,0	76	13,1	367	129,3	92	15,8	353	136,2	106	18,2	339	143,7	119	20,4
	55 °C / 60 °C	5	314	106,4	31	5,4	303	112,1	45	7,8	292	118,2	58	10,0	280	124,8	70	12,0	268	131,9	80	13,8
		6	325	107,7	33	5,6	314	113,4	47	8,1	302	119,6	60	10,4	289	126,3	72	12,4	277	133,4	83	14,3
		7	335	109,1	34	5,8	323	115,0	48	8,3	312	121,0	62	10,7	299	127,7	75	12,9	286	135,0	86	14,8
		8	346	110,5	35	6,0	334	116,3	50	8,6	322	122,5	64	11,1	309	129,3	77	13,3	296	136,5	89	15,3
		10	371	114,1	37	6,4	359	119,8	54	9,3	346	126,1	69	11,9	332	132,9	83	14,3	318	140,3	95	16,4
		12	395	117,1	40	6,8	381	123,0	57	9,8	367	129,3	73	12,6	353	136,2	88	15,2	339	143,7	102	17,5
1500 Z HPS	50 °C / 55 °C	5	338	112,4	51	8,7	331	119,8	66	11,4	324	127,1	81	13,9	316	135,3	95	16,3	308	144,2	108	18,5
		6	347	113,7	52	9,0	341	120,8	68	11,7	334	126,0	84	14,4	325	136,7	98	16,8	316	145,9	111	19,0
		7	358	115,0	54	9,2	350	122,0	70	12,0	343	129,9	86	14,7	335	138,3	101	17,3	327	147,7	114	19,7
		8	368	116,3	55	9,5	361	123,6	72	12,4	353	131,3	88	15,2	344	139,9	103	17,8	336	149,2	118	20,2
		10	392	119,6	59	10,1	384	126,9	77	13,2	376	134,9	94	16,2	367	143,6	110	18,9	358	153,0	125	21,6
		12	413	122,5	62	10,7	405	129,9	81	13,9	396	138,0	99	17,0	386	147,4	116	19,9				
	55 °C / 60 °C	5	338	112,4	34	5,8	331	119,8	50	8,5	324	127,1	65	11,1	316	135,3	79	13,6	308	144,2	92	15,9
		6	347	113,7	35	6,0	341	120,8	51	8,8	334	126,0	67	11,5	325	136,7	81	14,0	316	145,9	95	16,3
		7	358	115,0	36	6,2	350	122,0	53	9,0	343	129,9	69	11,8	335	138,3	84	14,4	327	147,7	98	16,9
		8	368	116,3	37	6,3	361	123,6	54	9,3	353	131,3	71	12,1	344	139,9	86	14,8	336	149,2	101	17,3
		10	392	119,6	39	6,7	384	126,9	58	9,9	376	134,9	75	12,9	367	143,6	92	15,8	358	153,0	107	18,5
		12	413	122,5	41	7,1	405	129,9	61	10,4	396	138,0	79	13,6	386	147,4	97	16,6				

Pf : Cooling capacity valid a DT according to operating limitst
Pa : Compressors + fans absorbed power
Pde: Desuperheater heating capacity recovered
Qde : Desuperheater water flow

PARTIAL HEAT RECOVERY CAPACITY

R407C
Low Noise - Xtra Low Noise

LX LXC LXH	Desuperheater water inlet and outlet temperature in °C	Evaporator water outlet temp. °C	TEMPÉRATURE D'ENTREE D'AIR AU CONDENSEUR °C																			
			26				29				32				35				38			
			Pf kW	Pa kW	Pde kW	Qde m³/h	Pf kW	Pa kW	Pde kW	Qde m³/h	Pf kW	Pa kW	Pde kW	Qde m³/h	Pf kW	Pa kW	Pde kW	Qde m³/h	Pf kW	Pa kW	Pde kW	Qde m³/h
1850 Z	50 °C / 55 °C	5	374	129,9	56	9,6	360	136,8	72	12,4	345	144,3	86	14,8	330	151,8	99	17,0	315	159,4	110	19,0
		6	386	131,7	58	10,0	372	138,6	74	12,8	357	145,9	89	15,4	342	153,5	103	17,6	326	161,4	114	19,6
		7	399	133,4	60	10,3	384	140,4	77	13,2	369	147,9	92	15,9	353	155,5	106	18,2	337	163,5	118	20,3
		8	412	135,3	62	10,6	396	142,3	79	13,6	380	150,3	95	16,3	365	157,5	110	18,8	348	165,6	122	20,9
		10	441	139,7	66	11,4	425	146,9	85	14,6	409	154,4	102	17,6	392	162,3	118	20,2	375	170,3	131	22,6
		12	468	143,7	70	12,1	451	151,3	90	15,5	434	159	109	18,7	417	166,7	125	21,5	398	175,1	139	24,0
	55 °C / 60 °C	5	374	129,9	37	6,4	360	136,8	54	9,3	345	144,3	69	11,9	330	151,8	83	14,2	315	159,4	95	16,3
		6	386	131,7	39	6,6	372	138,6	56	9,6	357	145,9	71	12,3	342	153,5	86	14,7	326	161,4	98	16,8
		7	399	133,4	40	6,9	384	140,4	58	9,9	369	147,9	74	12,7	353	155,5	88	15,2	337	163,5	101	17,4
		8	412	135,3	41	7,1	396	142,3	59	10,2	380	150,3	76	13,1	365	157,5	91	15,7	348	165,6	104	18,0
		10	441	139,7	44	7,6	425	146,9	64	11,0	409	154,4	82	14,1	392	162,3	98	16,9	375	170,3	113	19,4
		12	468	143,7	47	8,0	451	151,3	68	11,6	434	159	87	14,9	417	166,7	104	17,9	398	175,1	119	20,5
1850 Z HPS	50 °C / 55 °C	5	409	141,3	61	10,6	399	149,8	80	13,7	390	158,8	98	16,8	379	168,3	114	19,6	367	178,0	128	22,1
		6	422	139,7	63	10,9	410	151,9	82	14,1	401	160,9	100	17,2	391	166,8	117	20,2	378	180,5	132	22,8
		7	433	145,1	65	11,2	423	153,9	85	14,6	413	163,2	103	17,8	401	172,9	120	20,7	390	178,8	137	23,5
		8	445	146,8	67	11,5	436	156,3	87	15,0	425	165,3	106	18,3	413	175,3	124	21,3	401	185,4	140	24,1
		10	474	152,0	71	12,2	463	160,7	93	15,9	452	170,6	113	19,4	440	180,4	132	22,7	427	191,7	149	25,7
		12	499	156,0	75	12,9	488	165,1	98	16,8	477	175,2	119	20,5	464	185,5	139	23,9				
	55 °C / 60 °C	5	409	141,3	41	7,0	399	149,8	60	10,3	390	158,8	78	13,4	379	168,3	95	16,3	367	178,0	110	18,9
		6	422	139,7	42	7,3	410	151,9	62	10,6	401	160,9	80	13,8	391	166,8	98	16,8	378	180,5	113	19,5
		7	433	145,1	43	7,4	423	153,9	63	10,9	413	163,2	83	14,2	401	172,9	100	17,2	390	178,8	117	20,1
		8	445	146,8	45	7,7	436	156,3	65	11,2	425	165,3	85	14,6	413	175,3	103	17,8	401	185,4	120	20,7
		10	474	152,0	47	8,2	463	160,7	69	11,9	452	170,6	90	15,5	440	180,4	110	18,9	427	191,7	128	22,0
		12	499	156,0	50	8,6	488	165,1	73	12,6	477	175,2	95	16,4	464	185,5	116	20,0				
2150 Z	50 °C / 55 °C	5	444	153,0	67	11,5	428	161,1	86	14,7	410	169,3	103	17,6	393	178,0	118	20,3	375	187,2	131	22,6
		6	459	155,0	69	11,8	441	163,4	88	15,2	424	171,4	106	18,2	406	180,2	122	20,9	388	189,5	136	23,4
		7	473	157,0	71	12,2	456	165,1	91	15,7	438	173,6	110	18,8	420	182,5	126	21,7	401	191,8	140	24,1
		8	488	159,1	73	12,6	471	167,3	94	16,2	453	175,8	113	19,5	434	184,8	130	22,4	415	194,2	145	25,0
		10	524	164,1	79	13,5	505	172,4	101	17,4	486	181,0	122	20,9	466	190,2	140	24,0	446	199,9	156	26,8
		12	556	168,9	83	14,3	537	177,1	107	18,5	516	185,9	129	22,2	496	195,2	149	25,6	474	205,1	166	28,5
	55 °C / 60 °C	5	444	153,0	44	7,6	428	161,1	64	11,0	410	169,3	82	14,1	393	178,0	98	16,9	375	187,2	113	19,4
		6	459	155,0	46	7,9	441	163,4	66	11,4	424	171,4	85	14,6	406	180,2	102	17,5	388	189,5	116	20,0
		7	473	157,0	47	8,1	456	165,1	68	11,8	438	173,6	88	15,1	420	182,5	105	18,1	401	191,8	120	20,7
		8	488	159,1	49	8,4	471	167,3	71	12,2	453	175,8	91	15,6	434	184,8	109	18,7	415	194,2	125	21,4
		10	524	164,1	52	9,0	505	172,4	76	13,0	486	181,0	97	16,7	466	190,2	117	20,0	446	199,9	134	23,0
		12	556	168,9	56	9,6	537	177,1	81	13,9	516	185,9	103	17,8	496	195,2	124	21,3	474	205,1	142	24,5
2150 Z HPS	50 °C / 55 °C	5	485	172,6	73	12,5	475	182,4	95	16,3	463	192,9	116	19,9	451	203,8	135	23,3	438	215,4	153	26,4
		6	499	174,6	75	12,9	489	184,8	98	16,8	477	195,3	119	20,5	465	206,3	140	24,0	450	218,1	158	27,1
		7	513	176,6	77	13,2	502	186,9	100	17,3	491	198,0	123	21,1	478	208,9	143	24,7	464	220,7	162	27,9
		8	528	178,8	79	13,6	517	189,3	103	17,8	505	200,1	126	21,7	492	211,5	148	25,4	478	223,7	167	28,8
		10	562	177,8	84	14,5	549	188,2	110	18,9	537	199,7	134	23,1	523	211,5	157	27,0	511	219,7	179	30,8
		12	592	182,5	89	15,3	580	193,3	116	20,0	567	205,0	142	24,4	551	217,6	165	28,4				
	55 °C / 60 °C	5	485	172,6	49	8,3	475	182,4	71	12,3	463	192,9	93	15,9	451	203,8	113	19,4	438	215,4	131	22,6
		6	499	174,6	50	8,6	489	184,8	73	12,6	477	195,3	95	16,4	465	206,3	116	20,0	450	218,1	135	23,2
		7	513	176,6	51	8,8	502	186,9	75	13,0	491	198,0	98	16,9	478	208,9	120	20,6	464	220,7	139	23,9
		8	528	178,8	53	9,1	517	189,3	78	13,3	505	200,1	101	17,4	492	211,5	123	21,2	478	223,7	143	24,7
		10	562	177,8	56	9,7	549	188,2	82	14,2	537	199,7	107	18,5	523	211,5	131	22,5	511	219,7	153	26,4
		12	592	182,5	59	10,2	580	193,3	87	15,0	567	205,0	113	19,5	551	217,6	138	23,7				

Pf : Cooling capacity valid a DT according to operating limitst
Pa : Compressors + fans absorbed power
Pde: Desuperheater heating capacity recovered
Qde : Desuperheater water flow

PARTIAL HEAT RECOVERY CAPACITY

R407C

Low Noise - Xtra Low Noise

LX LXC LXH	Desuperheater water inlet and outlet temperature in °C	Evaporator water outlet temp. °C	TEMPÉRATURE D'ENTREE D'AIR AU CONDENSEUR °C																			
			26				29				32				35				38			
			Pf kW	Pa kW	Pde kW	Qde m³/h	Pf kW	Pa kW	Pde kW	Qde m³/h	Pf kW	Pa kW	Pde kW	Qde m³/h	Pf kW	Pa kW	Pde kW	Qde m³/h	Pf kW	Pa kW	Pde kW	Qde m³/h
2500 Z	50 °C / 55 °C	5	541	181,2	81	14,0	520	190,4	104	17,9	498	200,3	125	21,4	475	209,8	143	24,5	452	219,7	158	27,2
		6	559	183,8	84	14,4	537	193,1	107	18,5	514	203,0	129	22,1	491	212,6	147	25,3	468	222,7	164	28,2
		7	577	186,4	87	14,9	555	195,9	111	19,1	532	205,6	133	22,9	508	215,6	152	26,2	484	225,8	169	29,1
		8	595	189,2	89	15,4	573	198,8	115	19,7	549	208,5	137	23,6	524	218,6	157	27,0	500	228,9	175	30,1
		10	638	195,8	96	16,5	614	205,4	123	21,1	589	215,3	147	25,3	564	225,6	169	29,1	538	236,4	188	32,4
		12	675	202,4	101	17,4	651	211,4	130	22,4	625	221,4	156	26,9	599	231,9	180	30,9	573	243,0	201	34,5
	55 °C / 60 °C	5	541	181,2	54	9,3	520	190,4	78	13,4	498	200,3	100	17,1	475	209,8	119	20,4	452	219,7	136	23,3
		6	559	183,8	56	9,6	537	193,1	81	13,9	514	203,0	103	17,7	491	212,6	123	21,1	468	222,7	140	24,1
		7	577	186,4	58	9,9	555	195,9	83	14,3	532	205,6	106	18,3	508	215,6	127	21,8	484	225,8	145	25,0
		8	595	189,2	60	10,2	573	198,8	86	14,8	549	208,5	110	18,9	524	218,6	131	22,5	500	228,9	150	25,8
		10	638	195,8	64	11,0	614	205,4	92	15,8	589	215,3	118	20,3	564	225,6	141	24,3	538	236,4	161	27,8
		12	675	202,4	68	11,6	651	211,4	98	16,8	625	221,4	125	21,5	599	231,9	150	25,8	573	243,0	172	29,6
2500 Z HPS	50 °C / 55 °C	5	595	198,9	89	15,4	581	210,6	116	20,0	565	223,0	141	24,3	549	235,5	165	28,3	531	248,0	186	32,0
		6	612	201,6	92	15,8	597	213,6	119	20,5	582	226,2	146	25,0	565	238,5	170	29,2	547	251,4	191	32,9
		7	629	204,9	94	16,2	615	216,9	123	21,2	599	229,6	150	25,8	581	242,4	174	30,0	563	255,3	197	33,9
		8	646	208,8	97	16,7	632	219,9	126	21,7	616	232,8	154	26,5	598	245,5	179	30,9	579	259,2	203	34,9
		10	688	214,4	103	17,8	672	227,1	134	23,1	656	240,9	164	28,2	638	254,3	191	32,9	619	260,0	217	37,3
		12	725	220,9	109	18,7	708	233,9	142	24,4	691	247,3	173	29,7	671	261,5	201	34,6				
	55 °C / 60 °C	5	595	198,9	60	10,2	581	210,6	87	15,0	565	223,0	113	19,4	549	235,5	137	23,6	531	248,0	159	27,4
		6	612	201,6	61	10,5	597	213,6	90	15,4	582	226,2	116	20,0	565	238,5	141	24,3	547	251,4	164	28,2
		7	629	204,9	63	10,8	615	216,9	92	15,9	599	229,6	120	20,6	581	242,4	145	25,0	563	255,3	169	29,1
		8	646	208,8	65	11,1	632	219,9	95	16,3	616	232,8	123	21,2	598	245,5	150	25,7	579	259,2	174	29,9
		10	688	214,4	69	11,8	672	227,1	101	17,3	656	240,9	131	22,6	638	254,3	160	27,4	619	260,0	186	31,9
		12	725	220,9	73	12,5	708	233,9	106	18,3	691	247,3	138	23,8	671	261,5	168	28,9				
2800 Z	50 °C / 55 °C	5	624	200,4	94	16,1	602	210,9	120	20,7	580	222,4	145	24,9	557	234,9	167	28,7	532	248,8	186	32,0
		6	644	202,8	97	16,6	622	213,4	124	21,4	599	224,9	150	25,8	575	237,5	173	29,7	551	251,5	193	33,2
		7	665	205,3	100	17,2	642	216,0	128	22,1	619	227,7	155	26,6	594	240,2	178	30,7	569	253,2	199	34,3
		8	686	207,9	103	17,7	663	218,6	133	22,8	639	230,4	160	27,5	614	243,1	184	31,7	588	256,9	206	35,4
		10	737	214,3	111	19,0	712	225,1	142	24,5	685	237,5	171	29,5	659	250,1	198	34,0	633	263,9	222	38,1
		12	783	220,3	117	20,2	756	231,1	151	26,0	729	243,1	182	31,3	701	256,1	210	36,2	672	270,2	235	40,5
	55 °C / 60 °C	5	624	200,4	62	10,7	602	210,9	90	15,5	580	222,4	116	20,0	557	234,9	139	24,0	532	248,8	160	27,5
		6	644	202,8	64	11,1	622	213,4	93	16,0	599	224,9	120	20,6	575	237,5	144	24,7	551	251,5	165	28,4
		7	665	205,3	67	11,4	642	216,0	96	16,6	619	227,7	124	21,3	594	240,2	149	25,5	569	253,2	171	29,4
		8	686	207,9	69	11,8	663	218,6	99	17,1	639	230,4	128	22,0	614	243,1	154	26,4	588	256,9	176	30,3
		10	737	214,3	74	12,7	712	225,1	107	18,4	685	237,5	137	23,6	659	250,1	165	28,3	633	263,9	190	32,7
		12	783	220,3	78	13,5	756	231,1	113	19,5	729	243,1	146	25,1	701	256,1	175	30,1	672	270,2	202	34,7
2800 Z HPS	50 °C / 55 °C	5	685	215,6	103	17,7	673	229,3	135	23,2	661	240,4	165	28,4	645	260,3	194	33,3	630	277,8	221	37,9
		6	704	218,1	106	18,2	692	231,8	138	23,8	680	243,0	170	29,2	664	263,3	199	34,3	648	281,0	227	39,0
		7	724	220,6	109	18,7	713	230,7	143	24,5	697	249,7	174	30,0	685	262,1	206	35,3	668	279,9	234	40,2
		8	744	223,3	112	19,2	731	237,2	146	25,1	717	252,6	179	30,8	704	265,1	211	36,3	685	287,6	240	41,2
		10	792	229,4	119	20,4	780	239,6	156	26,8	762	259,6	191	32,8	746	276,7	224	38,5	729	295,6	255	43,9
		12	834	235,1	125	21,5	822	245,4	164	28,3	806	261,1	202	34,7	786	283,4	236	40,6				
	55 °C / 60 °C	5	685	215,6	69	11,8	673	229,3	101	17,4	661	240,4	132	22,7	645	260,3	161	27,7	630	277,8	189	32,5
		6	704	218,1	70	12,1	692	231,8	104	17,9	680	243,0	136	23,4	664	263,3	166	28,6	648	281,0	194	33,4
		7	724	220,6	72	12,5	713	230,7	107	18,4	697	249,7	139	24,0	685	262,1	171	29,5	668	279,9	200	34,5
		8	744	223,3	74	12,8	731	237,2	110	18,9	717	252,6	143	24,7	704	265,1	176	30,3	685	287,6	206	35,3
		10	792	229,4	79	13,6	780	239,6	117	20,1	762	259,6	152	26,2	746	276,7	187	32,1	729	295,6	219	37,6
		12	834	235,1	83	14,3	822	245,4	123	21,2	806	261,1	161	27,7	786	283,4	197	33,8				

Pf : Cooling capacity valid a DT according to operating limitst
Pa : Compressors + fans absorbed power
Pde: Desuperheater heating capacity recovered
Qde : Desuperheater water flow

PARTIAL HEAT RECOVERY CAPACITY

R407C

Low Noise - Xtra Low Noise

LX LXC LXH	Desuperheater water inlet and outlet temperature in °C	Evaporator water outlet temp. °C	TEMPÉRATURE D'ENTREE D'AIR AU CONDENSEUR °C																			
			26				29				32				35				38			
			Pf kW	Pa kW	Pde kW	Qde m³/h	Pf kW	Pa kW	Pde kW	Qde m³/h	Pf kW	Pa kW	Pde kW	Qde m³/h	Pf kW	Pa kW	Pde kW	Qde m³/h	Pf kW	Pa kW	Pde kW	Qde m³/h
3050 Z	50 °C / 55 °C	5	742	245,1	111	19,1	722	258,8	144	24,8	706	274	177	30,4	685	289,4	206	35,3	665	306,3	233	40,0
		6	762	247,9	114	19,7	747	262,5	149	25,7	724	277,5	181	31,1	705	292,9	212	36,4	688	310,5	241	41,4
		7	785	251,1	118	20,3	765	271,3	153	26,3	748	280,5	187	32,2	725	303,3	218	37,4	710	313,9	249	42,7
		8	808	254,3	121	20,8	790	268,8	158	27,2	770	284,1	193	33,1	746	307,4	224	38,5	730	317,2	256	43,9
		10	863	261,9	129	22,3	844	276,7	169	29,0	824	292,4	206	35,4	802	309,3	241	41,4	777	330	272	46,8
		12	911	268,9	137	23,5	891	283,8	178	30,7	866	307,7	217	37,2	847	315,7	254	43,7				
HPS	55 °C / 60 °C	5	742	245,1	74	12,8	722	258,8	108	18,6	706	274	141	24,3	685	289,4	171	29,5	665	306,3	200	34,3
		6	762	247,9	76	13,1	747	262,5	112	19,3	724	277,5	145	24,9	705	292,9	176	30,3	688	310,5	206	35,5
		7	785	251,1	79	13,5	765	271,3	115	19,7	748	280,5	150	25,7	725	303,3	181	31,2	710	313,9	213	36,6
		8	808	254,3	81	13,9	790	268,8	119	20,4	770	284,1	154	26,5	746	307,4	187	32,1	730	317,2	219	37,7
		10	863	261,9	86	14,8	844	276,7	127	21,8	824	292,4	165	28,3	802	309,3	201	34,5	777	330	233	40,1
		12	911	268,9	91	15,7	891	283,8	134	23,0	866	307,7	173	29,8	847	315,7	212	36,4				
3400 Z	50 °C / 55 °C	5	822	275,2	123	21,2	803	290,1	161	27,6	779	305,7	195	33,5	758	323,3	227	39,1	731	340,4	256	44,0
		6	843	280,3	126	21,7	829	294,0	166	28,5	805	310,3	201	34,6	780	327,2	234	40,2	755	344,3	264	45,5
		7	870	284,2	131	22,4	851	299,5	170	29,3	827	314,0	207	35,6	803	331,5	241	41,4	779	349,8	273	46,9
		8	897	289,3	135	23,1	875	303,3	175	30,1	849	318,2	212	36,5	828	336,3	248	42,7	801	354,3	280	48,2
		10	954	300,2	143	24,6	934	313,9	187	32,1	910	328,3	228	39,1	881	356,4	264	45,5	864	364,2	302	52,0
		12	1009	313,2	151	26,0	985	326,1	197	33,9	962	337,4	241	41,4	932	366,2	280	48,1				
HPS	55 °C / 60 °C	5	822	275,2	82	14,1	803	290,1	120	20,7	779	305,7	156	26,8	758	323,3	190	32,6	731	340,4	219	37,7
		6	843	280,3	84	14,5	829	294,0	124	21,4	805	310,3	161	27,7	780	327,2	195	33,5	755	344,3	227	39,0
		7	870	284,2	87	15,0	851	299,5	128	22,0	827	314,0	165	28,4	803	331,5	201	34,5	779	349,8	234	40,2
		8	897	289,3	90	15,4	875	303,3	131	22,6	849	318,2	170	29,2	828	336,3	207	35,6	801	354,3	240	41,3
		10	954	300,2	95	16,4	934	313,9	140	24,1	910	328,3	182	31,3	881	356,4	220	37,9	864	364,2	259	44,6
		12	1009	313,2	101	17,4	985	326,1	148	25,4	962	337,4	192	33,1	932	366,2	233	40,1				
3750 Z	50 °C / 55 °C	5	908	310,3	136	23,4	883	327,6	177	30,4	857	345,5	214	36,9	832	355,1	250	42,9	802	372,9	281	48,3
		6	930	314,4	140	24,0	911	331,6	182	31,3	888	351,8	222	38,2	861	360,8	258	44,4	827	378,7	289	49,8
		7	956	318,1	143	24,7	932	336,1	186	32,1	915	356,0	229	39,3	881	364,4	264	45,5	855	384,8	299	51,5
		8	987	323,9	148	25,5	963	342,0	193	33,1	940	360	235	40,4	909	370,6	273	46,9	879	400,6	308	52,9
		10	1050	334,3	158	27,1	1027	353,7	205	35,3	1002	367,6	251	43,1	972	381,5	292	50,2	942	409,8	330	56,7
		12	1109	344,0	166	28,6	1082	363,5	216	37,2	1054	378,8	264	45,3	1027	393,3	308	53,0				
HPS	55 °C / 60 °C	5	908	310,3	91	15,6	883	327,6	132	22,8	857	345,5	171	29,5	832	355,1	208	35,8	802	372,9	241	41,4
		6	930	314,4	93	16,0	911	331,6	137	23,5	888	351,8	178	30,5	861	360,8	215	37,0	827	378,7	248	42,7
		7	956	318,1	96	16,4	932	336,1	140	24,0	915	356,0	183	31,5	881	364,4	220	37,9	855	384,8	257	44,1
		8	987	323,9	99	17,0	963	342,0	144	24,8	940	360	188	32,3	909	370,6	227	39,1	879	400,6	264	45,4
		10	1050	334,3	105	18,1	1027	353,7	154	26,5	1002	367,6	200	34,5	972	381,5	243	41,8	942	409,8	283	48,6
		12	1109	344,0	111	19,1	1082	363,5	162	27,9	1054	378,8	211	36,3	1027	393,3	257	44,2				
4200 Z	50 °C / 55 °C	5	1077	372	162	27,8	1049	394	210	36,1	1017	415	254	43,7	987	426	296	50,9	951	448	333	57,3
		6	1104	377	166	28,5	1081	399	216	37,2	1054	423	264	45,3	1022	433	307	52,7	982	454	344	59,1
		7	1135	382	170	29,3	1105	403	221	38,0	1087	427	272	46,7	1045	437	314	53,9	1015	462	355	61,1
		8	1172	389	176	30,2	1143	411	229	39,3	1116	432	279	48,0	1078	445	323	55,6	1043	481	365	62,8
		10	1247	401	187	32,2	1218	425	244	41,9	1189	442	297	51,1	1153	459	346	59,5	1117	492	391	67,2
		12	1315	413	197	33,9	1283	437	257	44,1	1250	455	313	53,8	1219	472	366	62,9				
HPS	55 °C / 60 °C	5	1077	372	108	18,5	1049	394	157	27,1	1017	415	203	35,0	987	426	247	42,4	951	448	285	49,1
		6	1104	377	110	19,0	1081	399	162	27,9	1054	423	211	36,3	1022	433	256	43,9	982	454	295	50,7
		7	1135	382	114	19,5	1105	403	166	28,5	1087	427	217	37,4	1045	437	261	44,9	1015	462	305	52,4
		8	1172	389	117	20,2	1143	411	171	29,5	1116	432	223	38,4	1078	445	270	46,4	1043	481	313	53,8
		10	1247	401	125	21,4	1218	425	183	31,4	1189	442	238	40,9	1153	459	288	49,6	1117	492	335	57,6
		12	1315	413	132	22,6	1283	437	192	33,1	1250	455	250	43,0	1219	472	305	52,4				

Pf : Cooling capacity valid a DT according to operating limitst
Pa : Compressors + fans absorbed power
Pde: Desuperheater heating capacity recovered
Qde : Desuperheater water flow

Correction factors for ethylene glycol

Evaporator

Mass concentration %	Multiplying coefficient		
	Cooling capacity	Chilled water flow	Chilled water pressure drops
10	0.99	1.05	1.05
20	0.985	1.10	1.10
30	0.98	1.15	1.15
40	0.97	1.20	1.23

Necessary glycol concentration

Mass concentration %		0	10	20	30	40
Ethylene glycol	Freezing point °C	0	-4	-9	-16	-23
	Minimum water outlet °C	4	2	0	-5	-11
Propylene glycol	Freezing point °C	0	-3	-7	-13	-22
	Minimum water outlet °C	4	3	-2	-4	-10

Operating ranges

High performance version

905 rpm fan speed

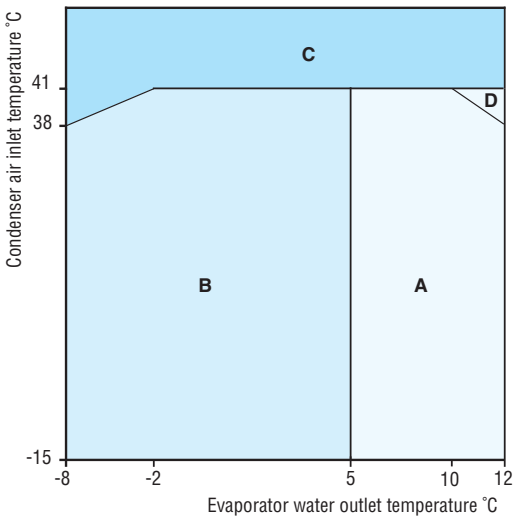

Low noise - Xtra low noise versions

715 rpm fan speed

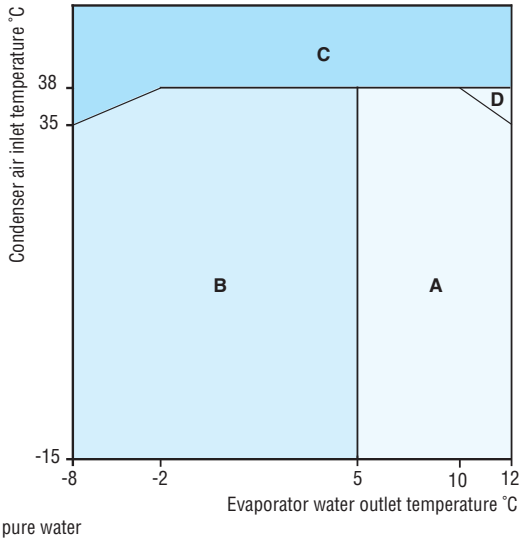

A - Full load operation with pure water
B - Full load operation with glycol compulsory
C - Part load operation
D - Operation without HPS

Evaporator limits

The curve below represents the min. and max. admissible temperature differences on pure water or glycol water as a function of the fluid outlet temperature at the evaporator.

Check also minimum and maximum temperature differences according to minimum and maximum flow (see curves "Hydraulic characteristics").

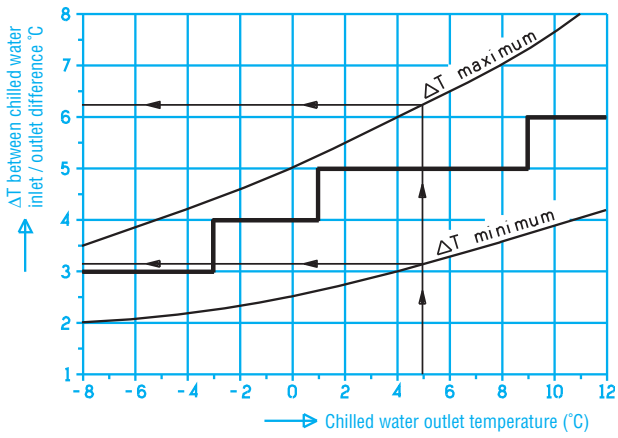

—— Difference considered in performances calculation tables

Example :
For a water outlet : + 5 °C (ΔT for performances calculation 5 °C)
ΔT minimum : 3,1 °C — Water temp : 8,1 / 5 °C
ΔT maximum : 7,5 °C — Water temp : 12,5 / 5 °C

HYDRAULIC CHARACTERISTICS

Water pressure drop POWERCIAT LX - LXC

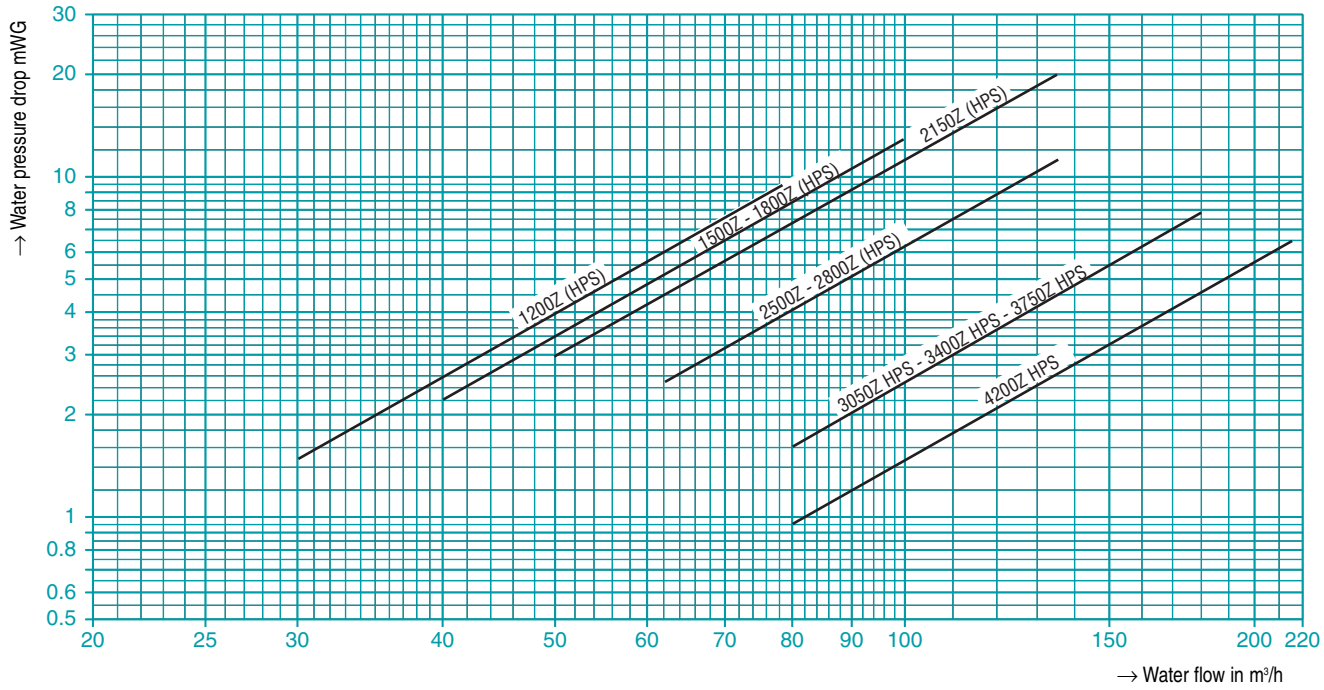

Do not extrapolate the values. Minimum and maximum water flow must be respected.

Water pressure drop POWERCIAT LXH

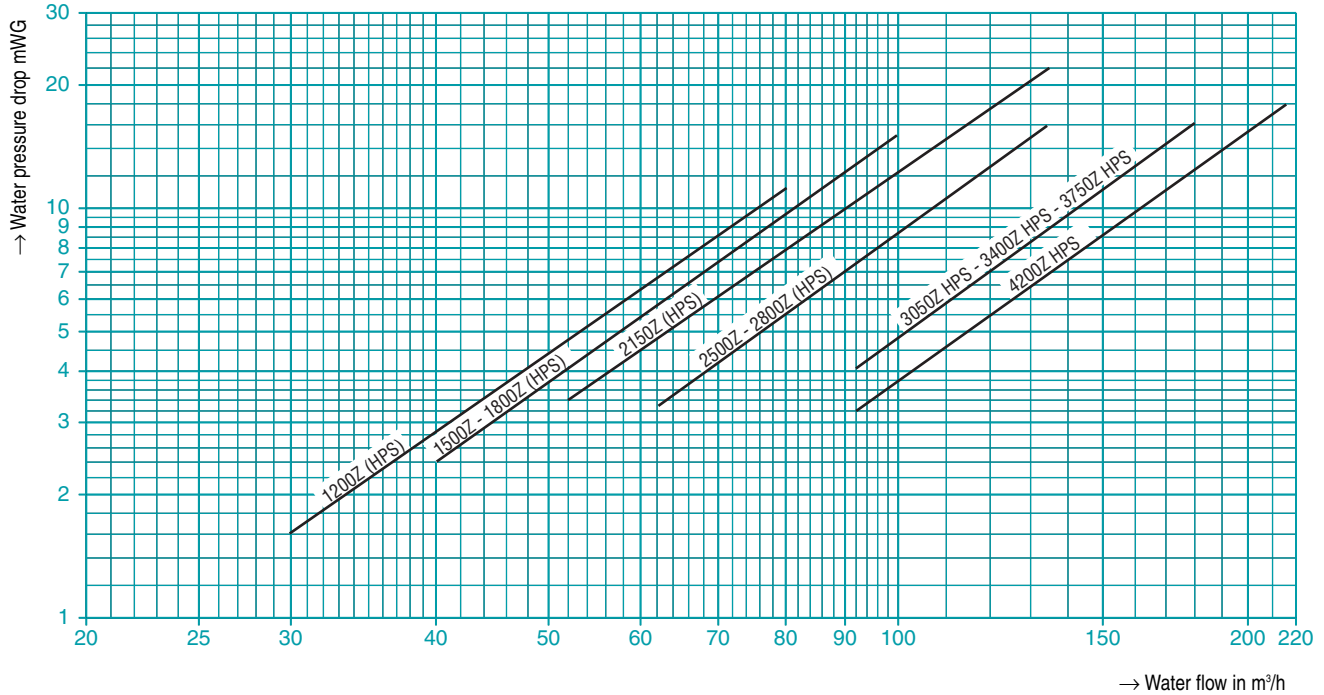

Desuperheater water pressure drop

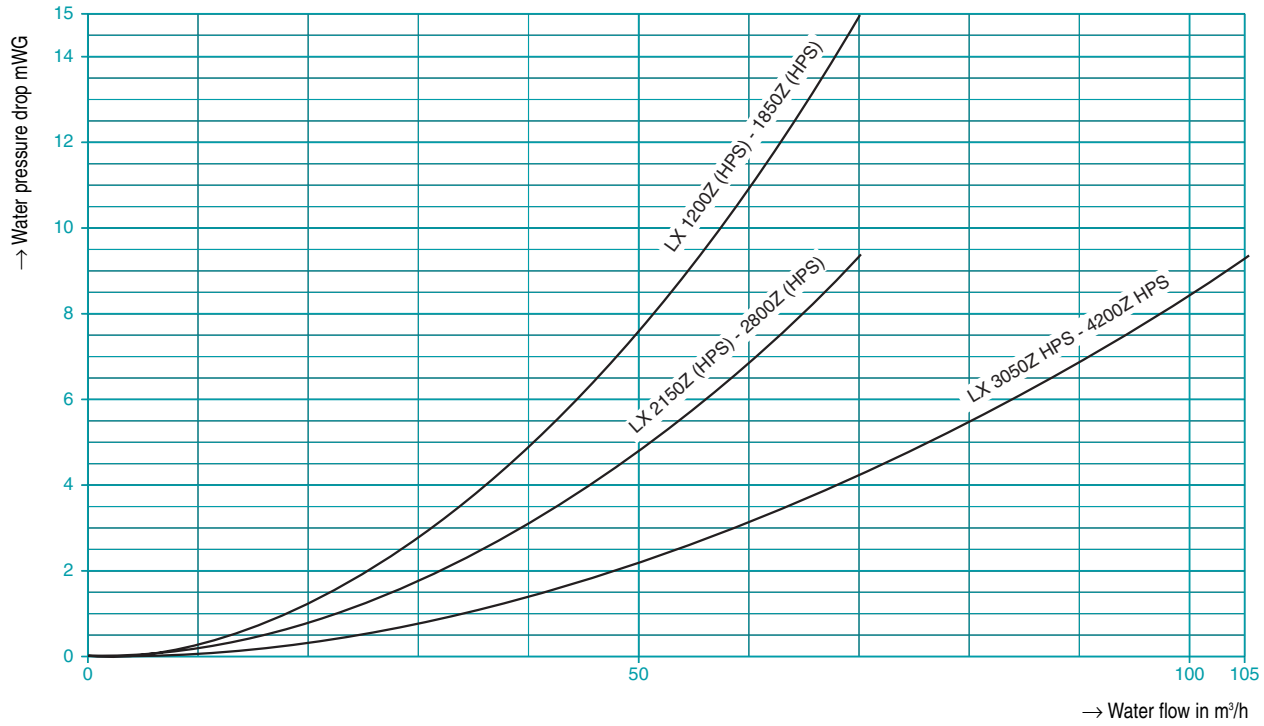

Pumps selection

102 to 116 : single pumps

202 to 216 : twin pumps

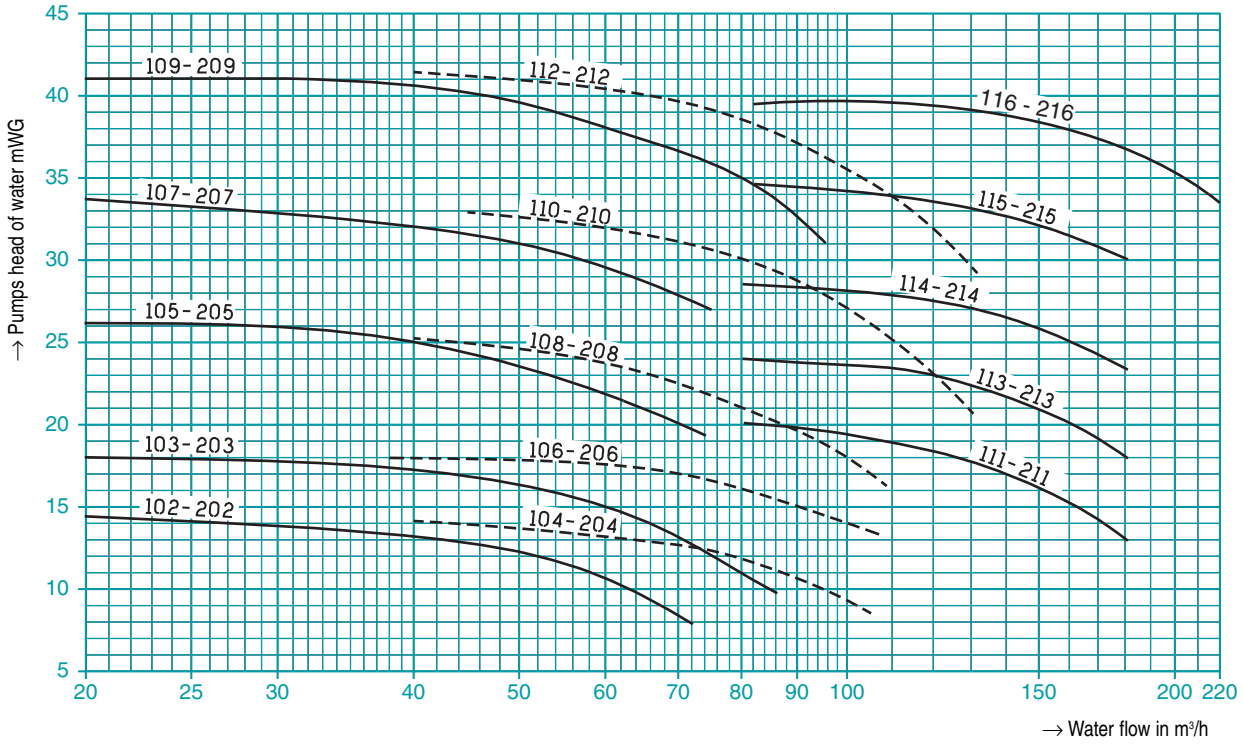

Do not extrapolate the values. Minimum and maximum water flow must be respected.

MINIMUM CHILLED WATER PIPING VOLUMES

POWERCIAT LX - LXH - LXC

Xtra Connect microprocessor fitted on POWERCIAT units allows a very flexible adjustement of the operation in comparison with the drift of parameters, especially for hydraulic installation with low water volume.

The auto adaptive control of the units and modulating capacity control on each compressor avoid the use of anti-short cycle function and the installation of buffer tank.

Minimum water volume ot the installation following sizes of units as below

Models LX - LXH - LXC	1200 Z	1200 Z HPS	1500 Z	1500 Z HPS	1850 Z	1850 Z HPS	2150 Z	2150 Z HPS	2500 Z	2500 Z HPS	2800 Z	2800 Z HPS	3050 Z HPS	3400 Z HPS	3750 Z HPS	4200 Z HPS
Minimum volume of installations (litres)	787	880	1026	1145	1229	1396	1454	1657	1749	2005	2045	2352	1585	1779	1980	2240

Minimum chilled water piping volumes calculation for the following conditions :

- chilled water temperature : 12°C / 7°C
- condenser air inlet temperature : 35°C

NOTE :

Installations with important thermal variation or industrial process designed to supply very constant water temperature, must be equipped with buffer tank. (LXH alternative selection)

NOTES

SOUND LEVELS

HIGH PERFORMANCE version
High speed fans (905 rpm)

Acoustic pressure levels ref 2 x 10^{-5} Pa ± 3 dB (Lp)

LX - LXH LXC	SOUND PRESSURE LEVEL SPECTRUM (dB)							Total pressure level dB(A)
	63 Hz	125 Hz	250 Hz	500 Hz	1000 Hz	2000 Hz	4000 Hz	
1200Z 1200Z HPS	51	63	62	60	61	54	49	64
1500Z 1500Z HPS	53	65	64	62	63	56	51	66
1850Z 1850Z HPS	53	65	64	62	63	56	51	66
2150Z 2150Z HPS	52	65	64	65	64	59	53	67
2500Z 2500Z HPS	53	66	65	66	65	60	54	68
2800Z 2800Z HPS	55	67	66	64	65	58	53	68
3050Z HPS	55	67	66	64	65	58	53	68
3400Z HPS	56	68	67	65	66	59	54	69
3750Z HPS	56	68	67	65	66	59	54	69
4200Z HPS	56	68	67	65	66	59	54	69

Acoustic power levels ref 10^{-12} W ± 3 dB (Lw)

LX - LXH LXC	SOUND POWER LEVEL SPECTRUM (dB)							Total power level dB(A)
	63 Hz	125 Hz	250 Hz	500 Hz	1000 Hz	2000 Hz	4000 Hz	
1200Z 1200Z HPS	83	95	94	92	93	86	81	96
1500Z 1500Z HPS	85	97	96	94	95	88	83	98
1850Z 1850Z HPS	85	97	96	94	95	88	83	98
2150Z 2150Z HPS	85	98	97	98	97	92	86	100
2500Z 2500Z HPS	86	99	98	99	98	93	87	101
2800Z 2800Z HPS	88	100	99	97	98	91	86	101
3050Z HPS	88	100	99	97	98	91	86	101
3400Z HPS	89	101	100	98	99	92	87	102
3750Z HPS	89	101	100	98	99	92	87	102
4200Z HPS	89	101	100	98	99	92	87	102

Acoustic pressure levels are calculated following ISO 3744 regulation Lp = Lw - 10 log S, in free field and at 10 meters from the unit.
We remind that the acoustic pressure level is given as an indication and that only the sound power level is comparable and certified.

SOUND LEVELS

LOW NOISE (LN) version
Low speed fans (715 rpm) + compressors phonic insulation

Acoustic pressure levels ref 2 x 10^{-5} Pa ± 3 dB (Lp)

LX - LXH LXC	SOUND PRESSURE LEVEL SPECTRUM (dB)							Total pressure level dB(A)
	63 Hz	125 Hz	250 Hz	500 Hz	1000 Hz	2000 Hz	4000 Hz	
1200Z 1200Z HPS	57	55	57	55	55	49	44	58
1500Z 1500Z HPS	59	57	59	57	57	51	46	60
1850Z 1850Z HPS	59	57	59	57	57	51	46	60
2150Z 2150Z HPS	59	58	59	61	57	54	46	62
2500Z 2500Z HPS	60	59	60	62	58	55	47	63
2800Z 2800Z HPS	62	61	62	64	61	57	50	65
3050Z HPS	62	60	62	62	60	54	49	64
3400Z HPS	63	61	63	63	61	56	50	65
3750Z HPS	63	61	63	63	61	56	50	65
4200Z HPS	63	61	63	63	61	56	50	65

Acoustic power levels ref 10^{-12} W ± 3 dB (Lw)

LX - LXH LXC	SOUND POWER LEVEL SPECTRUM (dB)							Total power level dB(A)
	63 Hz	125 Hz	250 Hz	500 Hz	1000 Hz	2000 Hz	4000 Hz	
1200Z 1200Z HPS	89	87	89	87	87	81	76	90
1500Z 1500Z HPS	91	89	91	89	89	83	78	92
1850Z 1850Z HPS	91	89	91	89	89	83	78	92
2150Z 2150Z HPS	92	91	92	94	90	87	79	95
2500Z 2500Z HPS	93	92	93	95	91	88	80	96
2800Z 2800Z HPS	95	94	95	97	94	90	83	98
3050Z HPS	95	93	95	95	93	87	82	97
3400Z HPS	96	94	96	96	94	89	83	98
3750Z HPS	96	94	96	96	94	89	83	98
4200Z HPS	96	94	96	96	94	89	83	98

Acoustic pressure levels are calculated following ISO 3744 regulation Lp = Lw - 10 log S, in free field and at 10 meters from the unit.
We remind that the acoustic pressure level is given as an indication and that only the sound power level is comparable and certified.

SOUND LEVELS

XTRA LOW NOISE (XLN) version
Specific mounting for low speed fans (715 rpm) + compressors sound insulation

Acoustic pressure levels ref 2 x 10^{-5} Pa ± 3 dB (Lp)

LX - LXH LXC	SOUND PRESSURE LEVEL SPECTRUM (dB)							Total pressure level dB(A)
	63 Hz	125 Hz	250 Hz	500 Hz	1000 Hz	2000 Hz	4000 Hz	
1200Z 1200Z HPS	51	52	46	54	47	40	32	53
1500Z 1500Z HPS	56	53	49	55	50	44	34	55
1850Z 1850Z HPS	56	53	49	55	50	44	34	55
2150Z 2150Z HPS	60	56	49	56	50	44	34	55
2500Z 2500Z HPS	60	56	49	57	51	44	34	56
2800Z 2800Z HPS	63	59	50	59	52	46	36	58
3050Z HPS	61	57	51	57	52	46	36	57
3400Z HPS	62	58	52	58	53	47	37	58
3750Z HPS	62	58	52	58	53	47	37	58
4200Z HPS	62	58	52	58	53	47	37	58

Acoustic power levels ref 10^{-12} W ± 3 dB (Lw)

LX - LXH LXC	SOUND PRESSURE LEVEL SPECTRUM (dB)							Total pressure level dB(A)
	63 Hz	125 Hz	250 Hz	500 Hz	1000 Hz	2000 Hz	4000 Hz	
1200Z 1200Z HPS	83	84	78	86	79	72	64	85
1500Z 1500Z HPS	88	85	81	87	82	76	66	87
1850Z 1850Z HPS	88	85	81	87	82	76	66	87
2150Z 2150Z HPS	93	89	82	89	83	77	67	88
2500Z 2500Z HPS	93	89	82	90	84	77	67	89
2800Z 2800Z HPS	96	92	83	92	85	79	69	91
3050Z HPS	94	90	84	90	85	79	69	90
3400Z HPS	95	91	85	91	86	80	70	91
3750Z HPS	95	91	85	91	86	80	70	91
4200Z HPS	95	91	85	91	86	80	70	91

Acoustic pressure levels are calculated following ISO 3744 regulation Lp = Lw - 10 log S, in free field and at 10 meters from the unit.
We remind that the acoustic pressure level is given as an indication and that only the sound power level is comparable and certified.

DIMENSIONS LX - LXH

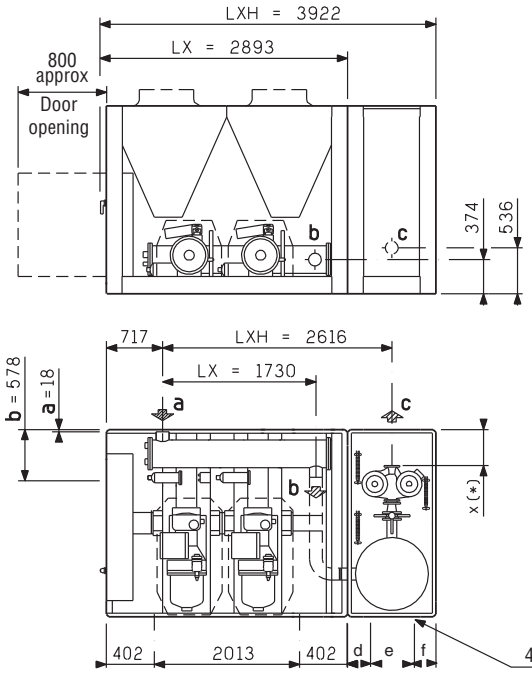

FIG.1

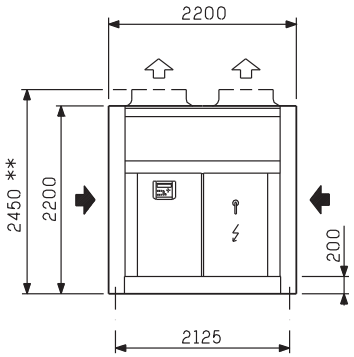

** For XTRA LOW NOISE version only

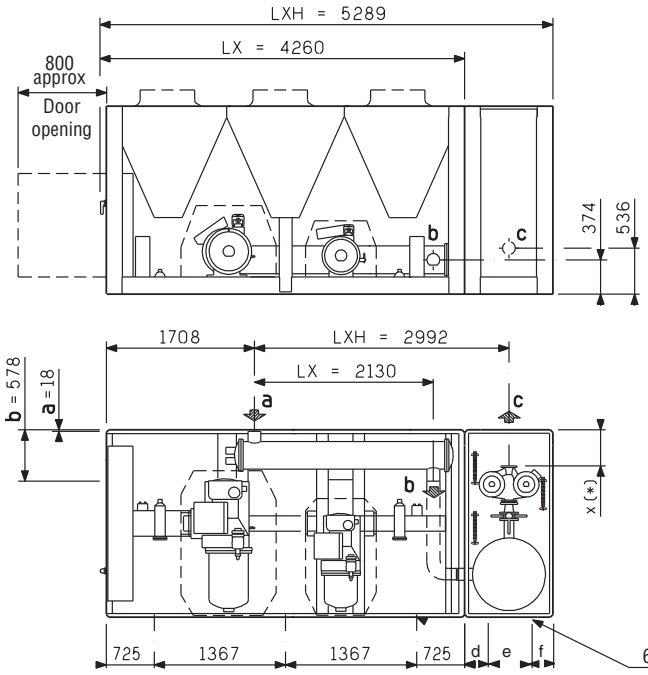

FIG.2

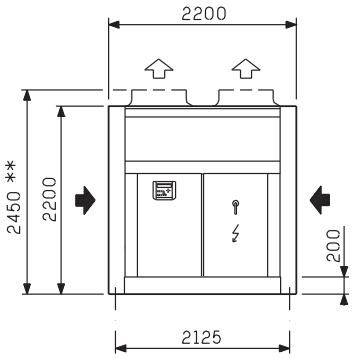

** For XTRA LOW NOISE version only

d	288
e	453
f	288

Models		Fig.	Chilled water inlet LX / LXH a	Chilled water outlet LX b	Chilled water outlet LXH c	Weight kg empty	Weight kg in operation
LX	1200Z (HPS)	1	VICTAULIC DN 125	DN 125	*	2667	2753
LXH	1200Z (HPS)					3417	4553
LX	1500Z (HPS)	2	VICTAULIC DN 125	DN 125	*	3459	3557
LXH	1500Z (HPS)					4209	5357
LX	1850Z (HPS)	2	VICTAULIC DN 125	DN 125	*	3908	4006
LXH	1850Z (HPS)					4658	5806

* **c** according to the selected pump (see page 26)

DIMENSIONS LX - LXH

FIG.3

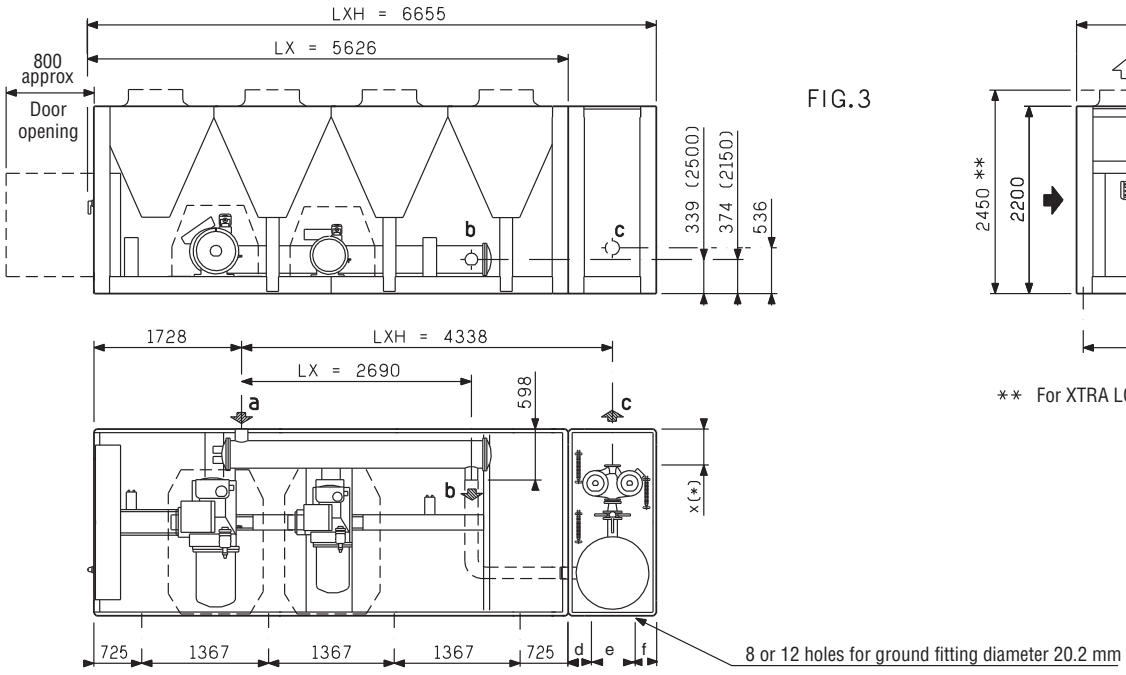

FIG.4

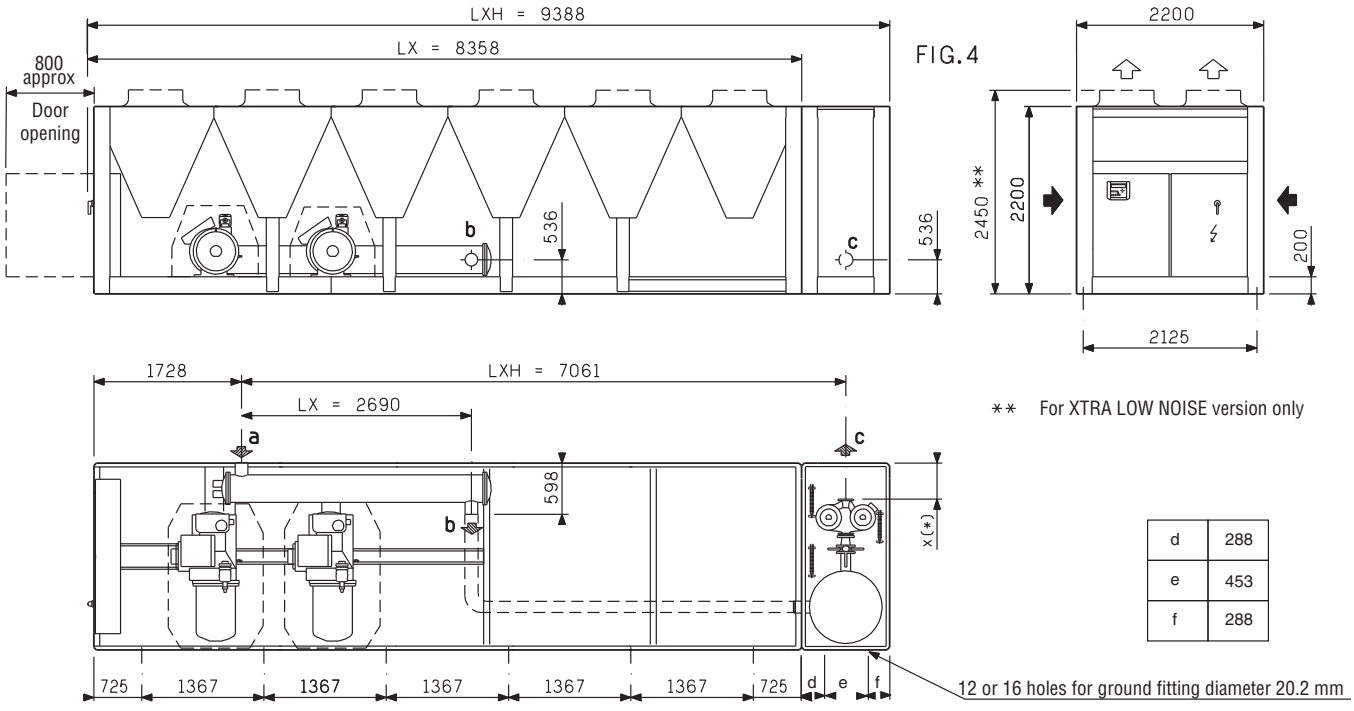

	d	288
	e	453
	f	288

Models		Fig.	Chilled water inlet LX / LXH a	Chilled water outlet LX b	Chilled water outlet LXH c	Weight kg empty	Weight kg in operation
LX	**2150Z (HPS)**	3	VICTAULIC DN 125	DN 125	*	4652	4767
LXH	**2150Z (HPS)**					5402	6567
LX	**2500Z (HPS)**	3	VICTAULIC DN 150	DN 150	*	5177	5327
LXH	**2500Z (HPS)**					5927	7127
LX	**2800Z (HPS)**	4	VICTAULIC DN 150	DN 150	*	6071	6221
LXH	**2800Z (HPS)**					6821	8021

* **c** according to the selected pump (see page 26)

DIMENSIONS LX - LXH

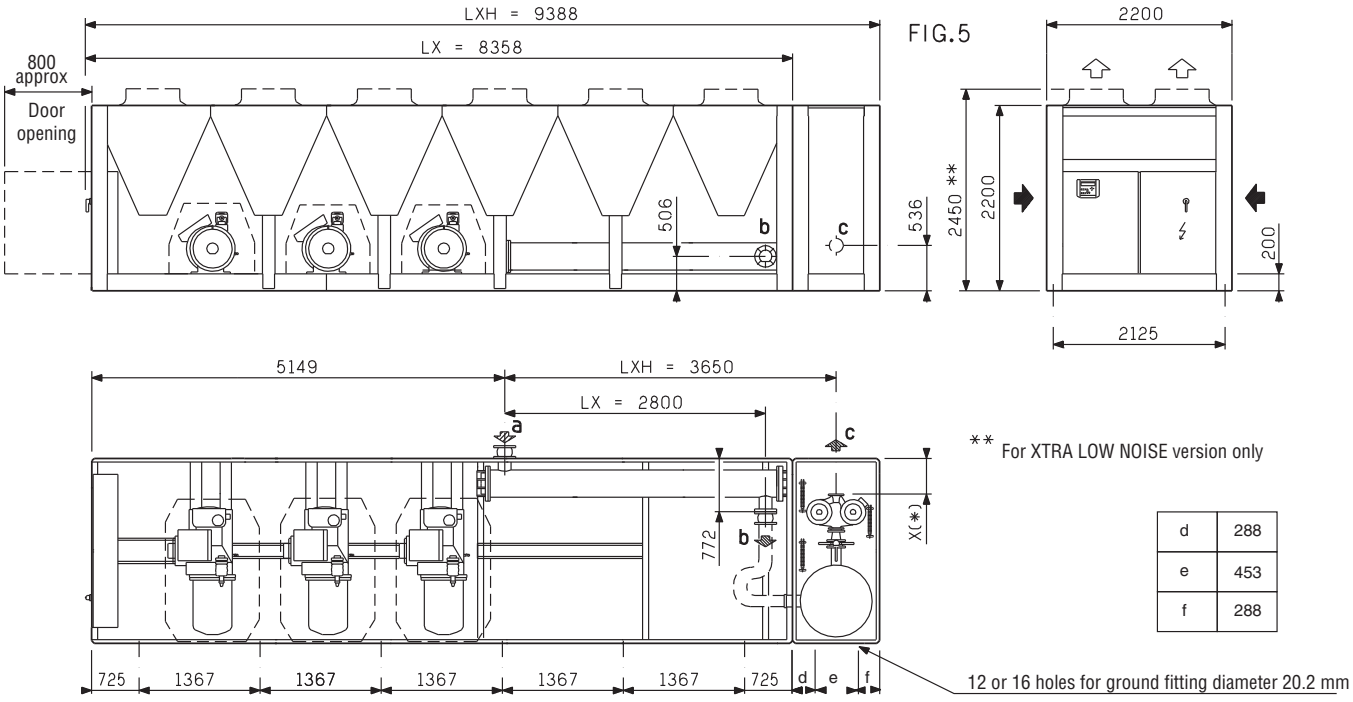

Models		Fig.	Chilled water			Weight kg	
			inlet LX / LXH a	outlet LX b	outlet LXH c	empty	in operation
LX	**3050Z HPS**	5	VICTAULIC DN 200	DN 200	*	6940	7186
LXH	**3050Z HPS**					7690	8986
LX	**3400Z HPS**	5	VICTAULIC DN 200	DN 200	*	7383	7629
LXH	**3400Z HPS**					8133	9429
LX	**3750Z HPS**	5	VICTAULIC DN 200	DN 200	*	7826	8072
LXH	**3750Z HPS**					8576	9872

* **c** according to the selected pump (see p.26)

DIMENSIONS LX - LXH

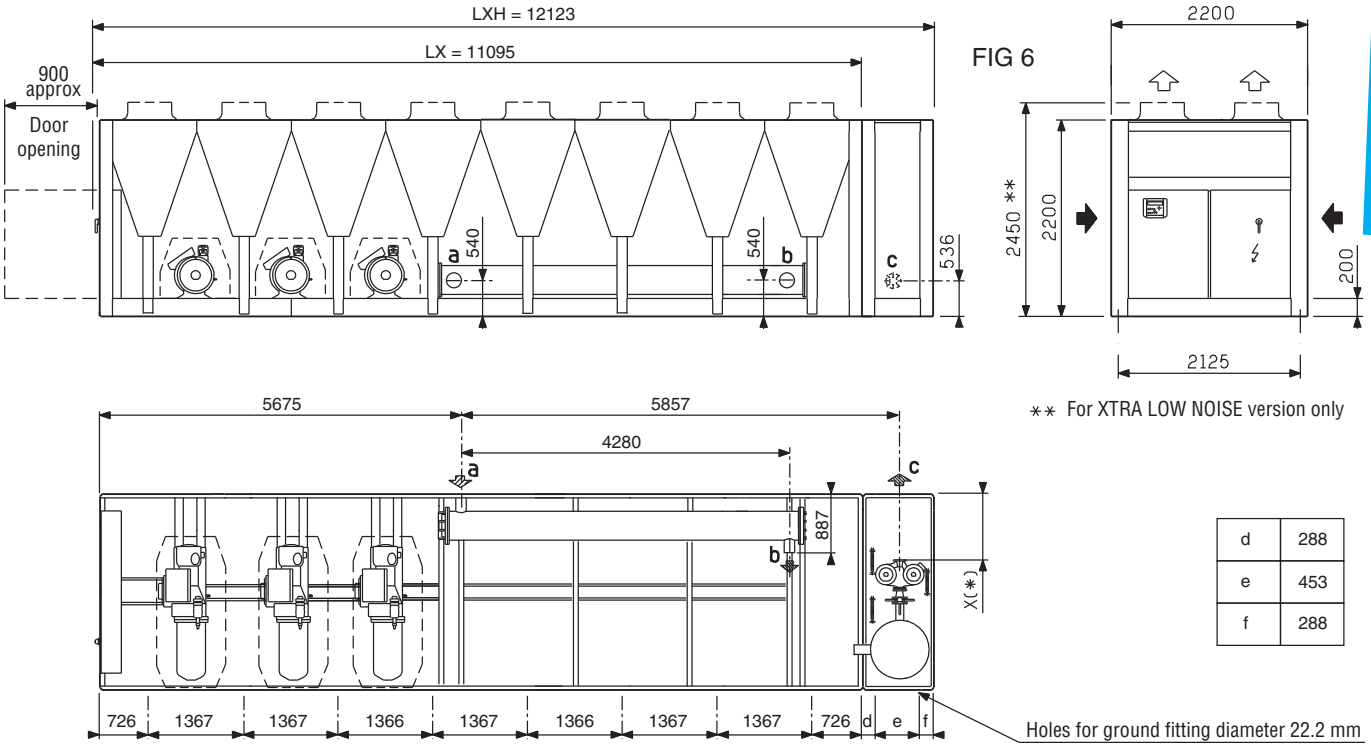

FIG 6

** For XTRA LOW NOISE version only

d	288
e	453
f	288

Models		Fig.	Chilled water inlet LX / LXH a	Chilled water outlet LX b	Chilled water outlet LXH c	Weight kg empty	Weight kg in operation
LX	**4200Z HPS**	6	VICTAULIC DN 200		*	10074	10514
LXH	**4200Z HPS**					11068	12098

Models	**1200 - 1500 - 1850 - 2150 - 2500 - 2800 - 3050 - 3400 - 3750 - 4200**		
Single pumps	102 - 103 - 105 - 107 - 109	104 - 106 - 108 - 110 - 112	111 - 113 - 114 - 115 - 116
Twin pumps	202 - 203 - 205 - 207 - 209	204 - 206 - 208 - 210 - 212	211 - 213 - 214 - 215 - 216
Flanges	DN 65 - PN 16	DN 80 - PN 16	DN 100 - PN 16
X (LXH)	364	374	448

* **c** according to the selected pump select above

Hydraulic equipment delivred separately for LXH 4200Z HPS

DIMENSIONS LXC

FIG.1

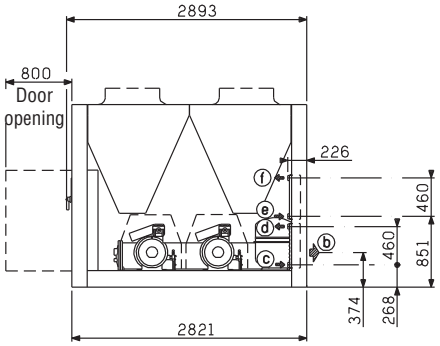

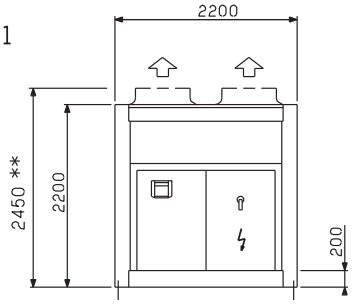

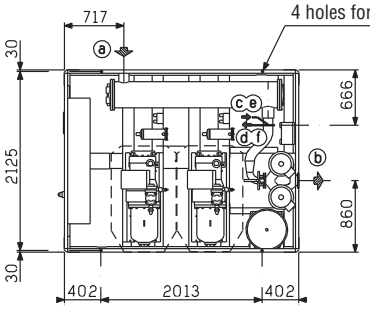

** For XTRA LOW NOISE version only

FIG.2

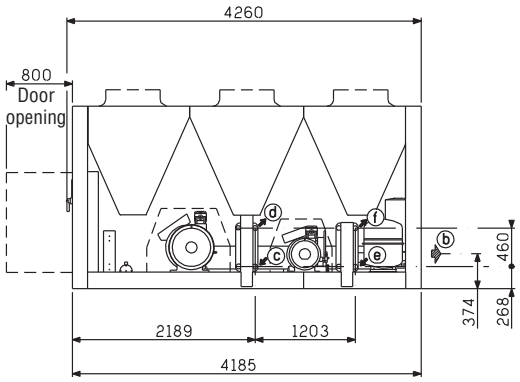

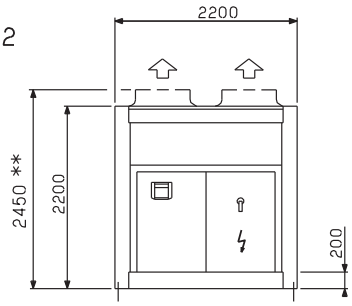

** For XTRA LOW NOISE version only

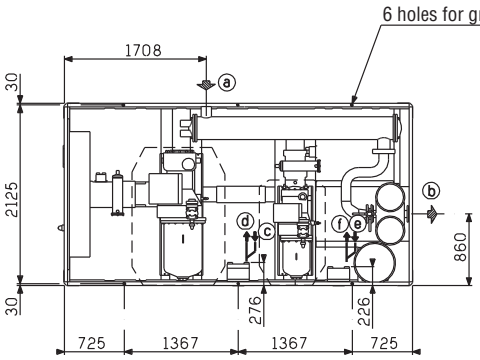

Models	Fig.	Chilled water		Desuperheaters hot water		Weight kg	
		inlet LXC a	oulet LXC b	inlet LX / LXC / LXH c - e	outlet LX / LXC / LXH d - f	empty	in operation
LXC 1200Z (HPS)	1	VICTAULIC DN 125	*	G 2"	G 2"	3017	3203
LXC 1500Z (HPS)	2	VICTAULIC DN 125	*	G 2"	G 2"	3809	3987
LXC 1850Z (HPS)	2	VICTAULIC DN 125	*	G 2"	G 2"	4258	4456

* **b** according to the selected pump (see page 30)

NOTE : Brazed plates desuperheaters optional (1 per refrigerant circuit) available for versions LX - LXC - LXH

DIMENSIONS LXC

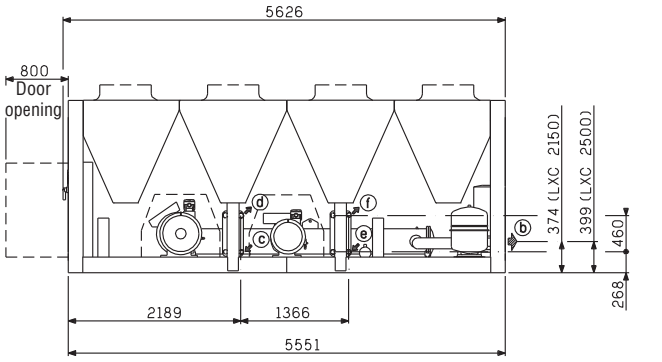

FIG.3

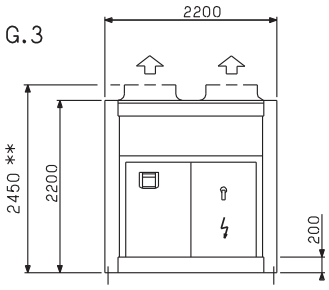

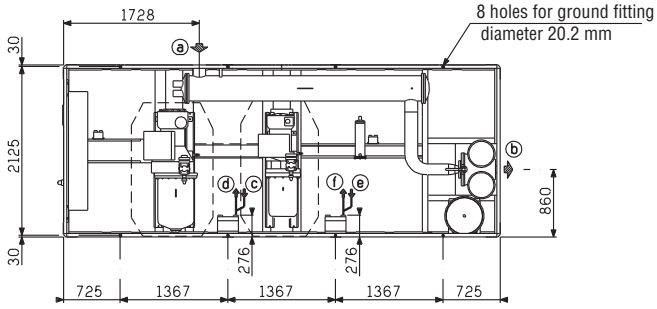

** For XTRA LOW NOISE version only

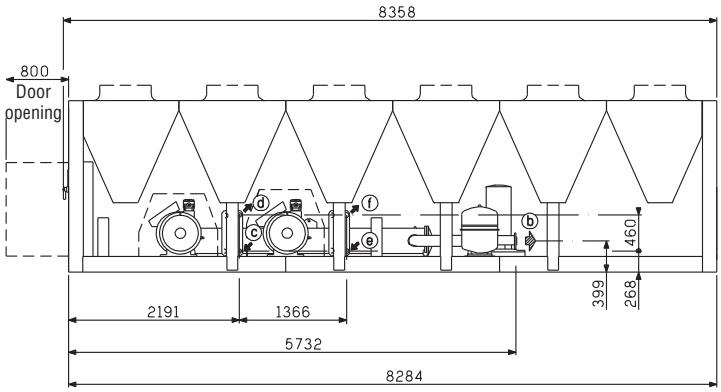

FIG.4

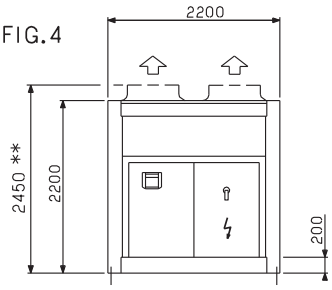

** For XTRA LOW NOISE version only

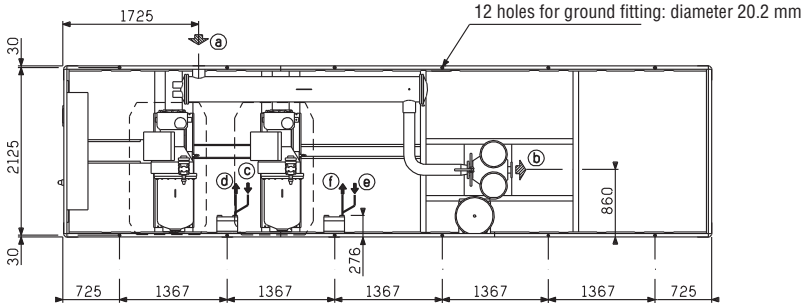

Models	Fig.	Chilled water		Desuperheaters hot water		Weight kg	
		inlet LXC a	outlet LXC b	inlet LX / LXC / LXH c - e	outlet LX / LXC / LXH d - f	empty	in operation
LXC 2150Z (HPS)	3	VICTAULIC DN 125	*	G 2"	G 2"	5002	5217
LXC 2500Z (HPS)	3	VICTAULIC DN 150	*	G 2"	G 2"	5527	5777
LXC 2800Z (HPS)	4	VICTAULIC DN 150	*	G 2"	G 2"	6421	6671

* **b** according to the selected pump (see page 30)

NOTE : Brazed plates desuperheaters optional (1 per refrigerant circuit) available for versions LX - LXC - LXH

DIMENSIONS LXC

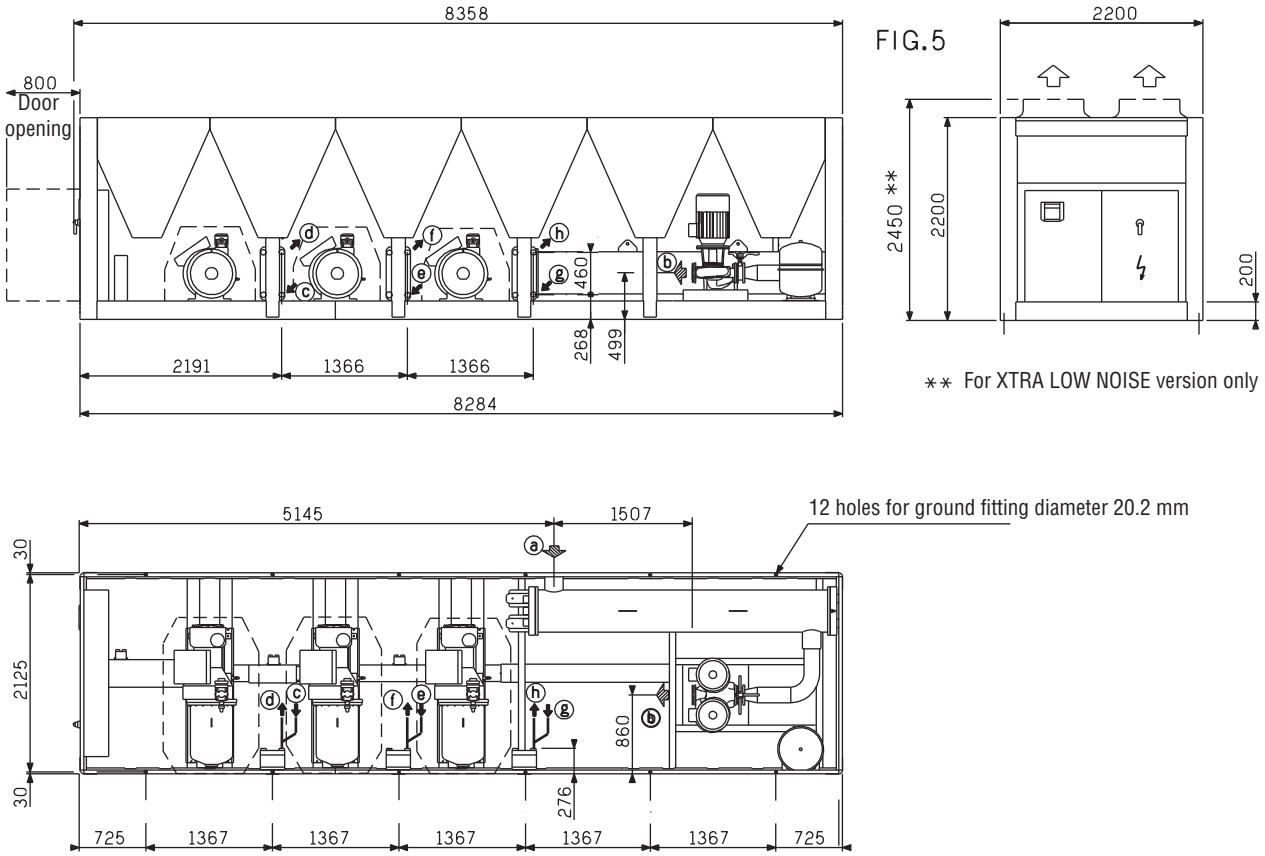

Models	Fig.	Chilled water		Desuperheaters hot water		Weight kg	
		inlet LXC a	outlet LXC b	inlet LX / LXC / LXH c - e - g	outlet LX / LXC / LXH d - f - h	empty	in operation
LXC 3050Z HPS	5	VICTAULIC DN 200	*	G 2"	G 2"	7290	7636
LXC 3400Z HPS	5	VICTAULIC DN 200	*	G 2"	G 2"	7733	8079
LXC 3750Z HPS	5	VICTAULIC DN 200	*	G 2"	G 2"	8176	8522

* **b** according to the selected pump (see p.30)

NOTE : Optional brazed plates desuperheaters (1 per refrigerant circuit) available for versions LX - LXC - LXH

DIMENSIONS LXC

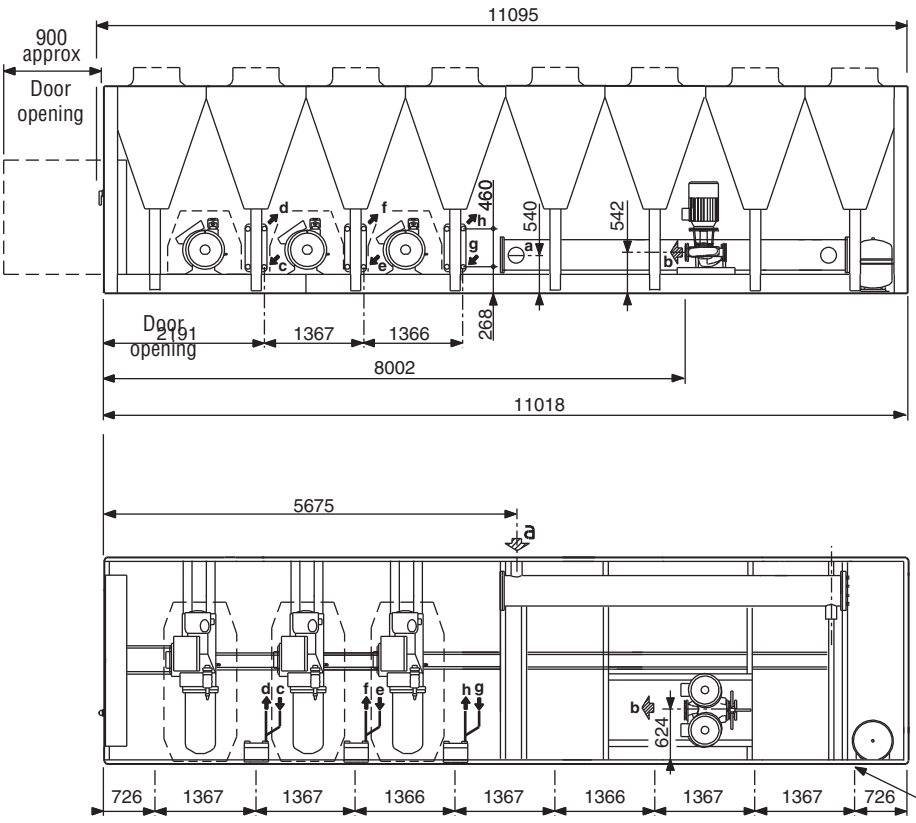

FIG 6

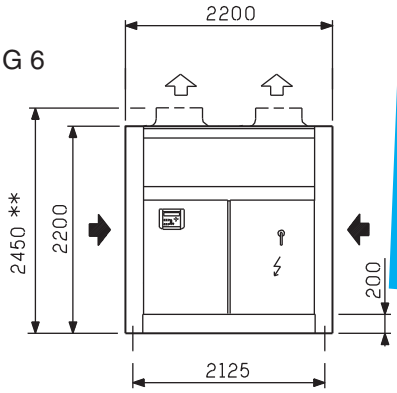

** For XTRA LOW NOISE version only

Holes for ground fitting diameter 22.2 mm

Models	Fig.	Chilled water		Desuperheaters hot water		Weight kg	
		inlet LXC a	outlet LXC b	inlet LX / LXC / LXH c - e - g	outlet LX / LXC / LXH d - f - h	empty	in operation
LXC 4200Z HPS	6	VICTAULIC DN 200	*	G 2"	G 2"	10630	11100

Models	**1200 - 1500 - 1850 - 2150 - 2500 - 2800 - 3050 - 3400 - 3750 4200**		
Single pumps	102 - 103 - 105 - 107 - 109	104 - 106 - 108 - 110 - 112	111 - 113 - 114 - 115 - 116
Twin pumps	202 - 203 - 205 - 207 - 209	204 - 206 - 208 - 210 - 212	211 - 213 - 214 - 215 - 216
Flanges	DN 65 - PN 16	DN 80 - PN 16	DN 100 - PN 16

* **b** according to the selected pump above

NOTE : Optional brazed plates desuperheaters (1 per refrigerant circuit) available for versions LX - LXC - LXH

ANTI-VIBRATION MOUNTS (OPTION)

POWERCIAT LX

For applications with very low vibrations, it is necessary to install anti-vibration mounts underneath the unit.

The fitting of mounts must be made according to the drawings below

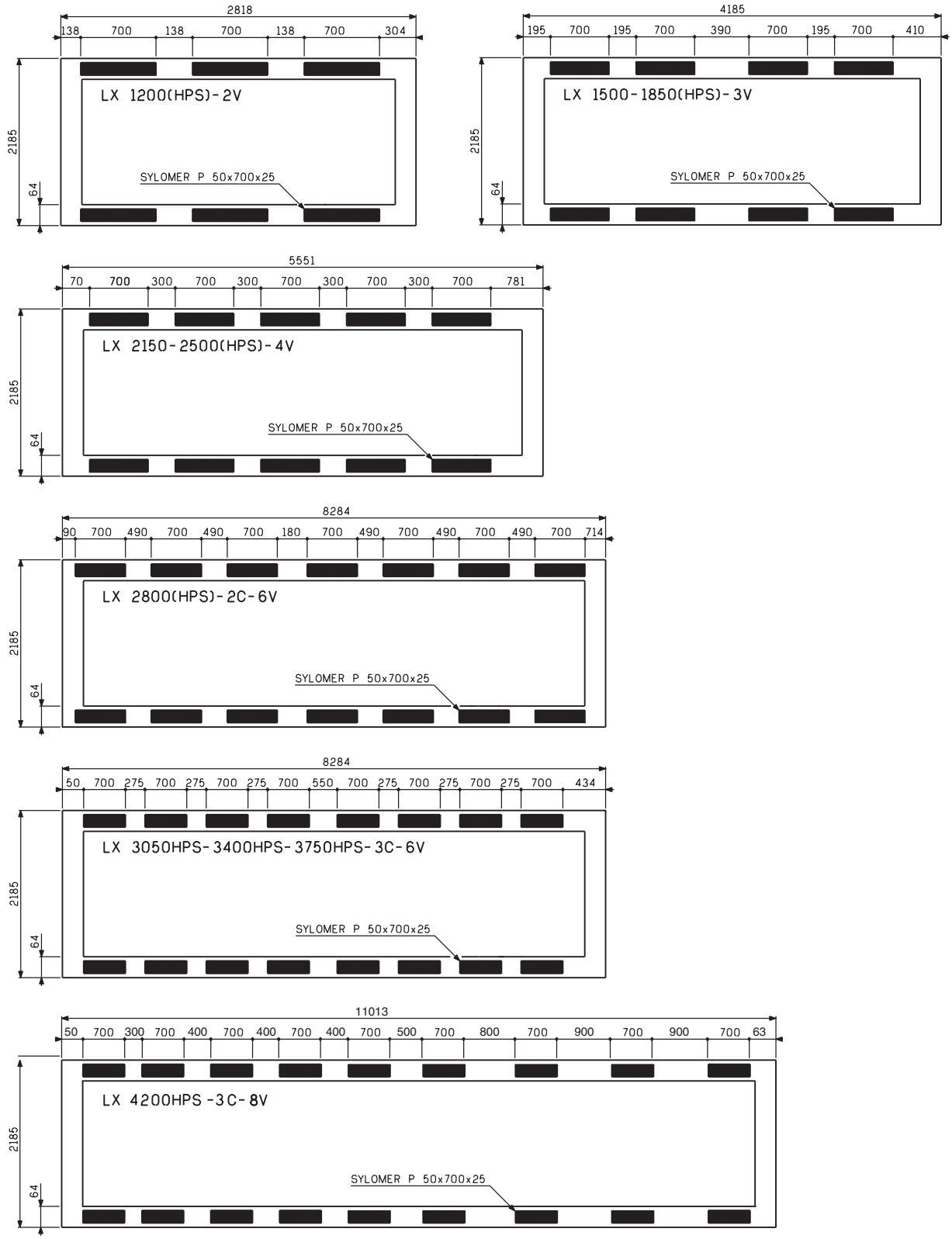

ANTI-VIBRATION MOUNTS (OPTION)

POWERCIAT LXH

For applications with very low vibrations, it is necessary to install anti-vibration mounts underneath the unit.

The fitting of mounts must be made according to the drawings below

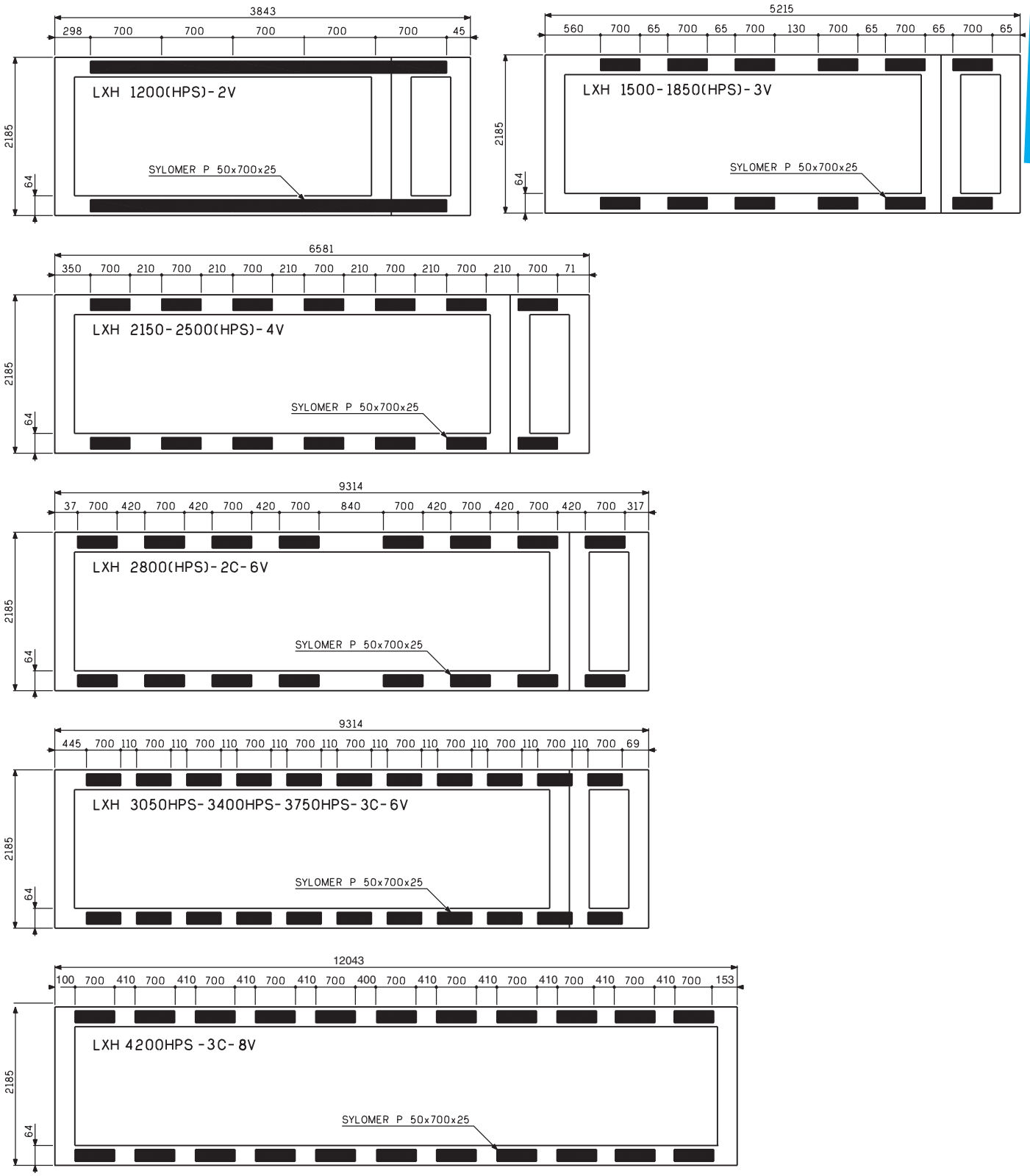

ANTI-VIBRATION MOUNTS (OPTION)

POWERCIAT LXC

For applications with very low vibrations, it is necessary to install anti-vibration mounts underneath the unit.

The fitting of mounts must be made according to the drawings below

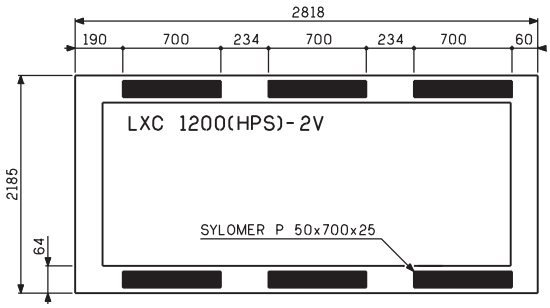

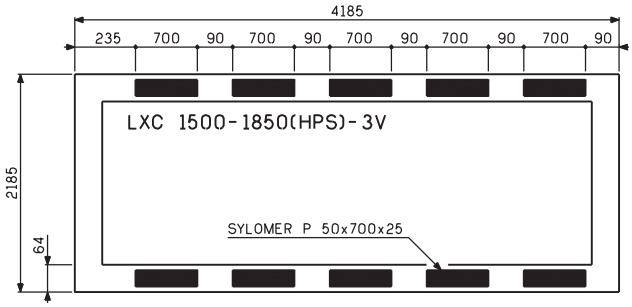

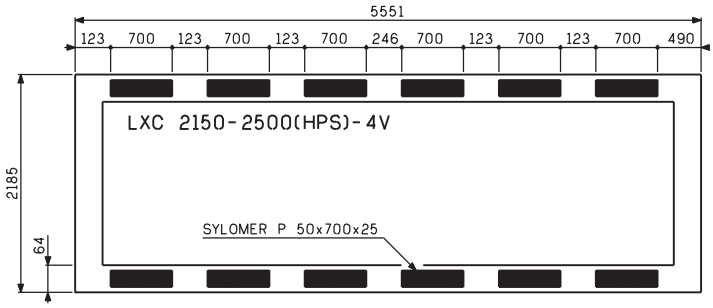

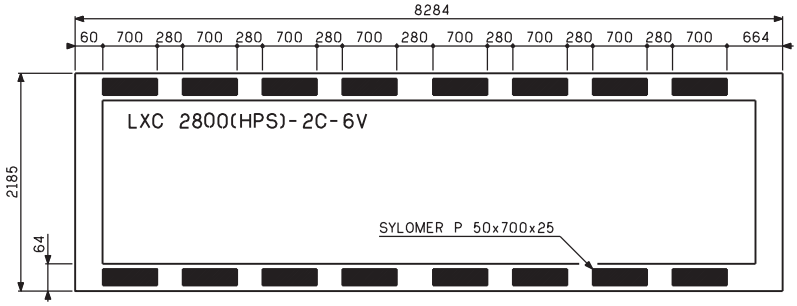

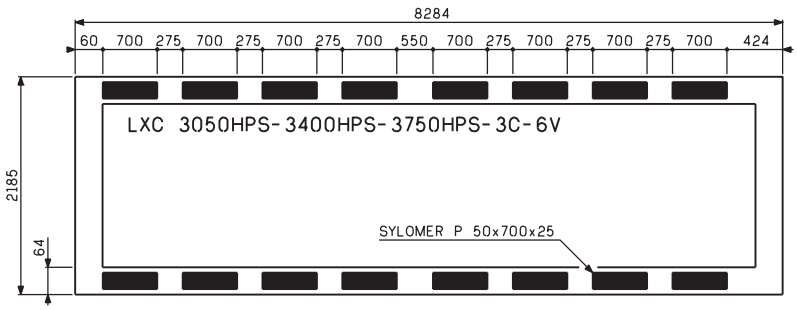

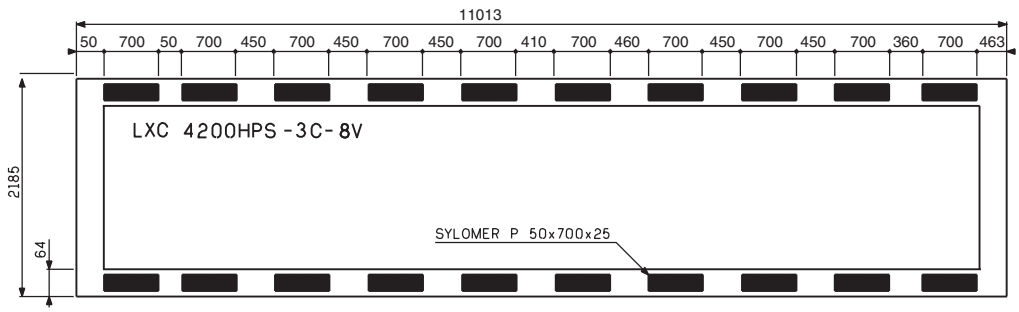

ADVISES FOR INSTALLATION

Location

■ The **POWERCIAT packaged units LX - LXC and LXH** are designed for outdoor installation.

■ A free space of 2 meters around the unit is necessary for a good air circulation and maintenance.

■ Choose the location in order to respect environment (Acoustic level, etc,...)

■ The sound level problems must be analysed in detail

So, before installation of the unit, study the best position, if necessary with a sound technician.

If necessary, install the unit on ant-ivibration mounts and equip the hydraulic pipes with flexible connectors **(recommended equipments)**

Electrical connections

■ All the indications concerning electrical connections are mentioned on the wiring diagram delivered with the unit (they must be respected).

■ These connections must be made following good engineering practice and in accordance to the norm in force.

■ Leave the control auxiliary circuit under voltage to allow operation of the crankcase heater and the antifreeze heater (option)

■ The customer electrical supply line must be fitted with a circuit breaker protection (to be supplied by the customer)

POWERCIAT LX - LXH - LXC

Antifreeze protection

■ If there is a risk of freezing :

a - either supply evaporator antifreeze protection option (LX model) or evaporator antifreeze protection + hydraulic equipment option (LXH - LXC models) if installation runs with pure water

b - or protect the installation with glycol concentration

c - or drain the installation

NOTE : With the antifreeze protection, the unit is not protected against freezing anymore if there is an electrical supply failure.

POWERCIAT LX

Hydraulic connections

■ The hydraulic connections must be made following good engineering practice

■ Plan all the necessary accessories for an hydraulic circuit :

- Expansion vessel
- Drains at low points
- Shut off valves
- Air vent at high points, etc.
- Make sure that the installation water contents is sufficient
- Plan, if required, a buffer tank

Commissioning

■ In accordance with our commissioning and maintenance brochure

Maintenance

■ In accordance with our maintenance brochure

■ Take out a maintenance contract

XTRACONNECT CONTROL

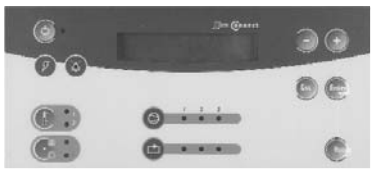



ERGONOMIC INTERFACE PANEL

- LDC multilingual screen (2 lines of 20 characters)
- Pressures and temperatures reading
- Pump control
- Communication

Available free contacts inputs / outputs

Inputs : - External ON/OFF contact
- Chilled water pump external ON/OFF contact
- Setpoint 1/2 selection
- General fault
- Emergency stop
- Compressors load shedding
- 0 - 20 mA remote control

Output : - General fault of the unit
- General fault per dircuit
- Pump control

RS 485 OUTPUT IN STANDARD

MODBUS-JBUS open Protocol (standard)
LONWORKS Protocol (option)

FREE CONTACTS RELAY CARD (OPTION)

Available outputs :
- Water flow fault
- Antifreeze fault
- Pump fault
- Fans fault
- Emergency stop fault
- Low and high pressure fault
- Compressors safety fault
- Compressors superheating fault
- Compressors lubrication fault
- Discharge temperature fault
- Compressors running

REMOTE CONTROL BOX (OPTION)

Operation and design same as display console

MULTICONNECT MULTI-UNIT MANAGEMENT (OPTION)

Main functions available:
- Management of up to 8 units on a single water loop
- Management in cooling mode (water chiller) or heating mode (heat pump)
- Management of chilled-water or hot-water pumps
- Centralised management of a backup unit
- Unit load shedding
- System time programming
- Energy storage mode management
- Fault management on each unit
- Unit running time balancing
- Integrated Modbus BMS link for obtaining information on unit operation and faults

Non contractual document. With the thought of material improvement always in mind, CIAT reserves the right,without notice, to proceed with any technical modification.

Head office & Factories
Avenue Jean Falconnier - B.P. 14
01350 - Culoz - France
Tel.: 33 4 79 42 42 42 - Fax: 33 4 79 42 42 10
e-mail: info@ciat.fr - http:\\www.ciat.com

CIAT Service
Tél. : 33 4 79 42 42 90 - Fax : 33 4 79 42 42 13

CERTIFIED ISO 9001
QUALITY SYSTEM

Compagnie Industrielle d'Applications Thermiques - S.A. with a registered capital of 26 000 000 € - R.C.S. Belley B 545 620 114