Carrier

United Technologies

PRODUCT SELECTION DATA



- Compact design
- High static available pressure
- Quiet operation
- Variable speed fans
- Variable water flow (optional)

Ductable Air-Cooled Liquid Chillers
Ductable Reversible Air-to-Water Heat Pumps

30RBSY 039-160/30RQSY 039-160

EUROVENT CERTIFIED PERFORMANCE
www.eurovent-certification.com

CARRIER participates in the ECP programme for LCP/HP
Check ongoing validity of certificate:
www.eurovent-certification.com
www.certiflash.com

Certiflash

AQUASNAP®

Original document

30RBSY 039-160/30RQSY 039-160

Nominal cooling capacity 30RBSY: 40-153 kW
Nominal cooling capacity 30RQSY: 37-147 kW
Nominal heating capacity 30RQSY: 42-159 kW

The Aquasnap liquid chiller/heat pump range was designed for commercial (air conditioning of offices, hotels etc.) or industrial (low-temperature process units etc.) applications.

It integrates the latest technological innovations:
- Ozone-friendly refrigerant R410A
- All-aluminium microchannel heat exchangers for the cooling only units (30RBSY)
- Scroll compressors
- Low-noise fans made of a composite material
- Auto-adaptive microprocessor control
- Electronic expansion valve
- Variable-speed pump (option)

The Aquasnap can be equipped with a hydronic module integrated into the unit chassis, limiting the installation to straightforward operations like connection of the power supply and the chilled water supply and return piping.

Features

Quiet operation

- Compressors
  - Low-noise scroll compressors with low vibration level
  - The compressor assembly is installed on an independent chassis and supported by anti-vibration mountings
  - Dynamic suction and discharge piping support, minimising vibration transmission (Carrier patent)
- Condenser (30RBSY)/air evaporator/condenser (30RQSY) section
  - Vertical condenser coils
  - Protection grilles on anti-vibration mountings to protect the heat exchanger against possible shocks (30RBSY 090-160 (optional) and 30RQSY 080-160 only).
  - Low-noise latest-generation Flying Bird IV fans, made of a composite material (Carrier patent) are now even quieter and do not generate intrusive low-frequency noise
  - Fan motor controlled by a variable-frequency controller, to allow adjustment of the fan speed in accordance with the ducting for optimised efficiency.
  - Rigid fan installation for reduced start-up noise (Carrier patent)

Easy and fast installation

- Physical features
  - Flying Bird IV fans controlled by a variable-frequency controller to provide up to 240 Pa available pressure (depending on the size) at nominal flow rate
  - Flow control in accordance with the ducting for optimised efficiency with the possibility to program a maximum supply air flow.
  - Supply air duct connection frame.
  - Suction air connection frame standard for sizes 30RBSY 039-080 and 30RQSY 039-078
  - Suction air filters optional (30RBSY 039-080 and 30RQSY 039-078 only)
  - Small unit footprint with a low height (1371 mm) for easy installation in most buildings
  - The unit is enclosed by easily removable panels, covering all components (except air heat exchanger and fans).
- Integrated hydronic module (option)
  - Centrifugal low or high-pressure water pump (as required), based on the pressure loss of the hydronic installation.

Hydronic module



  - Single or dual water pump (as required) with operating time balancing and automatic changeover to the back-up pump if a fault develops
  - Water filter protects the water pump against circulating debris
  - Pressure measurement, using two pressure transducers and allowing indication of water flow rate, water pressure and lack of water.
  - High-capacity membrane expansion tank ensures pressurisation of the water circuit
  - Overpressure valve, set to 4 bar
  - Speed variator on the pumps (option) to ensure the correct flow rate, based on the system requirements
  - Thermal insulation and frost protection down to -20°C, using an electric resistance heater (see table of options)
- Simplified electrical connections
  - A single power supply point without neutral
  - Main disconnect switch (option 70) with high trip capacity
  - Transformer for safe 24 V control circuit supply included
- Fast commissioning
  - Systematic factory operation test before shipment
  - Quick-test function for step-by-step verification of the instruments, electrical components and motors

Economical operation

- Variable-speed pump (option)
  - The control algorithm adjusts the water flow rate in accordance with the actual system requirements. This saves energy and makes the flow control valve unnecessary.
- Variable-speed fan
  - Variable-speed ventilation permits adjustment to any duct type and variation of the air flow rate for maximised unit EERs and COPs under any operating conditions.

- Increased energy efficiency at part load
  - Eurovent energy efficiency class A and B in cooling mode and A in heating mode (in accordance with EN14511-3:2013)
  - The refrigerant circuit includes several compressors connected in parallel. At part load, around 99% of the operating time, only the compressors that are absolutely necessary operate. At these conditions the compressors operating are more energy efficient, as they use the total condenser and evaporator capacity.
  - The electronic expansion device (EXV) allows operation at a lower condensing pressure (EER, COP and ESEER, SCOP optimisation).
  - Dynamic superheat management for better utilisation of the water heat exchanger surface.
  - Defrost cycle optimisation (30RQSY)
- Reduced maintenance costs
  - Maintenance-free scroll compressors
  - Fast diagnosis of possible incidents and their history via the Touch Pilot Junior control
  - R410A refrigerant is easier to use than other refrigerant blends

Environmental care

- Ozone-friendly R410A refrigerant
  - Chlorine-free refrigerant of the HFC group with zero ozone depletion potential
  - Very efficient - gives an increased energy efficiency ratio (EER, COP and ESEER)
  - 50% reduction in the refrigerant charge through the use of micro-channel heat exchangers for the cooling only units (30RBSY)
- Leak-tight refrigerant circuit
  - Brazed refrigerant connections for increased leak-tightness
  - Reduction of leaks due to reduced vibration levels and elimination of capillary tubes (TXVs)
  - Verification of pressure transducers and temperature sensors without transferring refrigerant charge

Supply air connection frame



Superior reliability

- State-of-the-art concept
  - Cooperation with specialist laboratories and use of limit simulation tools (finite element calculations) for the design of the critical components, e.g. motor supports, suction/discharge piping etc.
  - All aluminium micro-channel heat exchanger (MCHE) on cooling only units (30RBSY), offers increased corrosion resistance compared to traditional coils. The all-aluminium design eliminates the formation of galvanic currents between aluminium and copper that cause coil corrosion.
- Auto-adaptive control
  - Control algorithm prevents excessive compressor cycling and permits reduction of the water quantity in the hydronic circuit (Carrier patent)
  - Hydronic module with integrated pressure transducers allowing measurement of the water pressure at two points, as well as measurement of the water flow rate and detection of lack of water and pressure. This considerably reduces the risk of problems such as frost accumulation on the water heat exchanger.
  - Automatic compressor unloading in case of abnormally high condensing pressure. If an anomaly occurs (e.g. fouled air heat exchanger coil, fan failure) Aquasnap continues to operate, but at reduced capacity.
- Exceptional endurance tests
  - Corrosion resistance tests in salt mist in the laboratory
  - Accelerated ageing test on components that are submitted to continuous operation: compressor piping, fan supports
  - Transport simulation test in the laboratory on a vibrating table.

Touch Pilot Junior control

The Touch Pilot Junior features a control with advanced communication technology over Ethernet (IP), user-friendly and intuitive user interface with 4.3” colour touch screen.

- Energy management
  - Internal time schedule clock: Controls heat pump on/off times and operation at a second set-point
  - Set-point offset based on the outside air temperature
  - Master/slave control of two heat pumps operating in parallel with operating time equalisation and automatic change-over in case of a unit fault.
- Integrated advanced communication features
  - Night mode: Capacity and fan speed limitation for reduced noise level
  - With hydronic module: Water pressure display and water flow rate calculation
  - Easy and high-speed communication technology over Ethernet (IP) to a building management system
  - Access to multiple unit parameters.
- 4.3" Touch Pilot user interface

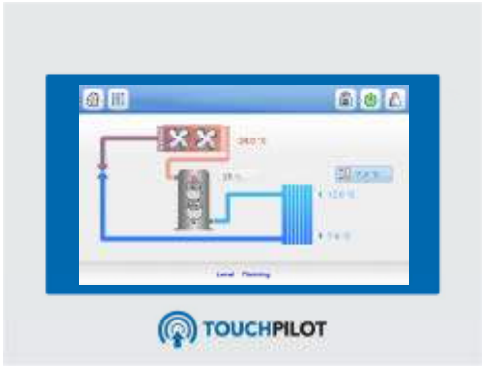

  - Intuitive and user-friendly 4.3 inch touch screen interface
  - Concise and clear information is available in local languages
  - Complete menu, customised for different users (end user, service personnel or Carrier engineers).

Remote management (standard)

Units with Touch Pilot Junior control can be easily accessed from the internet, using a PC with an Ethernet connection. This makes remote control quick and easy and offers significant advantages for service operations.
The Aquasnap is equipped with an RS485 serial port that offers multiple remote control, monitoring and diagnostic possibilities. Carrier offers a vast choice of control products, specially designed to control, manage and supervise the operation of an air conditioning system. Please consult your Carrier representative for more information.

The Aquasnap also communicates with other building management systems via optional communication gateways.
- A connection terminal allows remote control of the Aquasnap by wired cable:
- Start/stop: Opening of this contact will shut down the unit
- Dual set-point: Closing of this contact activates a second set-point (example: unoccupied mode).
- Demand limit: Closing of this contact limits the maximum heat pump capacity to a predefined value.
- Operation indication: This volt-free contact indicates that the heat pump is operating (cooling load).
- Alarm indication: This volt-free contact indicates the presence of a major fault that has led to the shut-down of one or several refrigerant circuits.

Variable fan speed controller



All-aluminium micro-channel heat exchanger (MCHE)

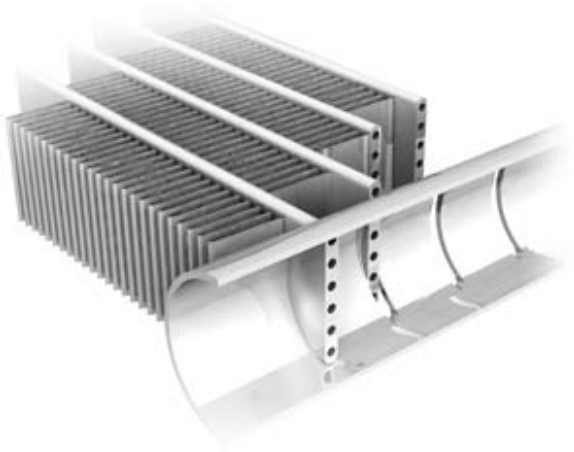

Already utilised in the automobile and aeronautical industries for many years, the MCHE micro-channel heat exchanger is entirely made of aluminium. This one-piece concept significantly increases its corrosion resistance by eliminating the galvanic currents that are created when two different metals (copper and aluminium) come into contact in traditional heat exchangers.

As an option, the Enviro-Shield and Super Enviro-Shield anti-corrosion protections have been developed to increase the application range of the MCHE coil from medium to very corrosive environments. With Enviro-Shield protection, corrosion resistance of the MCHE coil is doubled without any impact on heat exchange.

With Super Enviro-Shield protection corrosion resistance of the MCHE coil is multiplied by four, and allows use in very corrosive industrial or marine environments

The MCHE heat exchanger allows a reduction in chiller refrigerant charge by up to 50%.

The low thickness of the MCHE reduces air pressure losses by 50% and makes it less susceptible to fouling (e.g. by sand) than a traditional coil. Cleaning of the MCHE heat exchanger is very fast using a dry air jet or a high-pressure washer, while observing the usage precautions.

Options

Options	No.	Description	Advantages	Use
Condenser with anti6corrosion post treatment	2B	Factory application of Blygold Polual treatment on the copper/ aluminium coils	Improved corrosion resistance, recommended for industrial, rural and marine environments	30RBSY 039-160 with option 49, 5 or 6
Corrosion protection, traditional coils	3A	Fins made of pre-treated aluminium (polyurethane and epoxy)	Improved corrosion resistance, recommended for moderate marine and urban environments	30RBSY 039-160 with option 49, 5 or 6 30RQSY 039-160
Medium-temperature brine solution	5B	Low temperature chilled water production down to 0°C with ethylene glycol and propylene glycol.	Covers specific applications such as ice storage and industrial processes	30RBSY / 30RBQSY 039-160
Low-temperature brine solution	6B	Low temperature chilled water production down to -15°C with ethylene glycol and -12°C with propylene glycol.	Covers specific applications such as ice storage and industrial processes	30RBSY / 30RBQSY 039-160
Very low noise level	15LS	Acoustic compressor enclosure	Compressor noise emission reduction	30RBSY / 30RBQSY 039-160
Protection grilles	23	Metallic protection grilles	Coil protection against possible impact	30RBSY 039-160
Suction filter	23B	Washable G2 efficiency filter in accordance with EN 779	Prevents pollution of the air-heat exchanger	30RBSY 039-80 30RQSY 039-78
Soft Starter	25	Electronic starter on each compressor	Reduced start-up current	30RBSY / 30RBQSY 039-160
Frost protection down to -20°C	42	Electric heater on the hydronic module	Hydronic module frost protection at low outside temperatures	30RBSY / 30RBQSY 039-160
Partial heat recovery	49	Unit equipped with one desuperheater on each refrigerant circuit. Note: In this configuration the units are equipped with traditional coils (Cu/Al).	Production of free high-temperature hot-water simultaneously with chilled water production (or hot water for Heat pump)	30RBSY / 30RBQSY 039-160
Master/slave operation	58	Unit equipped with supplementary water outlet temperature sensor kit to be field-installed allowing master/slave operation of two units connected in parallel	Optimised operation of two units connected in parrallele operation with operating time equalisation	30RBSY / 30RBQSY 039-160
Main disconnect switch without fuse	70	Factory-installed main electric disconnect switch in the control box	Ease-of-installation and compliance with local electrical regulations	30RBSY / 30RBQSY 039-160
HP single-pump hydronic module	116R	Single high-pressure water pump, water filter, electronic water flow control, pressure transducers. For more details, refer to the dedicated chapter (expansion tank not included.Option with built-in safety hydraulic components available.)	Easy and fast installation (plug & play)	30RBSY / 30RBQSY 039-160
HP dual-pump hydronic module	116S	Dual high-pressure water pump, water filter, electronic water flow control, pressure transducers. For more details, refer to the dedicated chapter (expansion tank not included) Option with built-in safety hydraulic components available)	Easy and fast installation (plug & play)	30RBSY / 30RBQSY 039-160
LP single-pump hydronic module	116T	Single low-pressure water pump, water filter, electronic water flow control, pressure transducers. For more details, refer to the dedicated chapter (expansion tank not included Option with built-in safety hydraulic components available)	Easy and fast installation (plug & play)	30RBSY / 30RBQSY 039-160
LP dual-pump hydronic module	116U	Dual low-pressure water pump, water filter, electronic water flow control, pressure transducers. For more details, refer to the dedicated chapter (expansion tank not included Option with built-in safety hydraulic components available)	Easy and fast installation (plug & play)	30RBSY / 30RBQSY 039-160
HP variable-speed single-pump hydronic mod.	116V	Single high-pressure water pump with variable speed drive (VSD), water filter, electronic water flow control, pressure transducers. Multiple possibilities of water flow control. For more details, refer to the dedicated chapter (expansion tank not included Option with built-in safety hydraulic components available)	Easy and fast installation (plug & play), significant pumping energy cost savings (more than two-thirds), tighter water flow control, improved sytem reliability	30RBSY / 30RBQSY 039-160
HP variable-speed dual-pump hydronic mod.	116W	Dual high-pressure water pump with variable speed drive (VSD), water filter, electronic flow switch, pressure transducers. Multiple possibilities of water flow control. For more details, refer to the dedicated chapter (expansion tank not included Option with built-in safety hydraulic components available)	Easy and fast installation (plug & play), significant pumping energy cost savings (more than two-thirds), tighter water flow control, improved sytem reliability	30RBSY / 30RBQSY 039-160
J-Bus gateway	148B	Two-directional communication board complying with JBus protocol	Connects the unit by communication bus to a building management system	30RBSY / 30RBQSY 039-160
Lon gateway	148D	Two-directional communication board complying with Lon Talk protocol	Connects the unit by communication bus to a building management system	30RBSY / 30RBQSY 039-160
Bacnet over IP	149	Two-directional high-speed communication using BACnet protocol over Ethernet network (IP)	Easy and high-speed connection by ethernet line to a building management system. Allows access to multiple unit parameters	30RBSY / 30RBQSY 039-160
External boiler management	156a	Control board factory-installed on the unit to control a boiler	Extended remote control capabilities to a boiler on/off command.Permits easy control of a basic heating system	30RQSY 039-160
Electric heaters management	156b	Control board factory-installed on the unit with additional inputs/ outputs in order to manage up to 4 externals heating stage (electrical heaters…)	Extended remote control capabilities to up to 4 electrics heaters. Permits easy control of a basic heating system	30RQSY 039-160
Enviro-Shield anti-corrosion protection	262	Coating by conversion process which modifies the surface of the aluminum producing a coating that is integral to the coil. Complete immersion in a bath to ensure 100% coverage. No heat transfer variation, tested 4000 hours salt spray per ASTM B117	Improved corrosion resistance, recommended for use in moderately corrosive environments	30RBSY 039-160
Super Enviro-Shield anti-corrosion protection	263	Extremely durable and flexible epoxy polymer coating applied on micro channel heat exchangers by electro coating process, final UV protective topcoat. Minimal heat transfer variation, tested 6000 hours constant neutral salt spray per ASTM B117, superior impact resistance per ASTM D2794	Improved corrosion resistance, recommended for use in extremely corrosive environments	30RBSY 039-160
Evaporator screw connection sleeves	264	Evaporator inlet/outlet screw connection sleeves	Allows unit connection to a screw connector	30RBSY / 30RBQSY 039-160
Welded evaporator connection kit	266	Victaulic piping connections with welded joints	Easy installation	30RBSY / 30RBQSY 039-160
Reinforced ECM filtration for fan VFD	282A	Fan variable frequency drive compliance to IEC 61800-3 C1 class	Allows unit installation in domestic residential environment by reducing electromagnetic interferences	30RBSY / 30RBQSY 039-160
Reinforced ECM filtration for pump VFD	282B	Pump variable frequency drive compliance to IEC 61800-3 C1 class	Allows unit installation in domestic residential environment by reducing electromagnetic interferences	30RBSY / 30RBQSY 039-160 with option 116V or 116W
Expansion tank	293	6 bar expansion tank integrated in the hydraulic module (require option 116)	Easy and fast installation (plug & play), & Protection of closed water systems from excessive pressure	
Set point adjustment by 4-20mA signal	311	Connections to allow a 4-20mA signal input	Easy energy managment, allow to adjust set point by a 4-20mA external signal	30RBSY / 30RBQSY 039-160
Free Cooling dry cooler management	313	Control & connections to a Free Cooling Drycooler 09PE or 09VE fitted with option FC control box	Easy system managment, Extended control capabilities to a dryccoler used in Free Cooling mode	30RBSY 039-160

Partial heat reclaim using desuperheaters (option 49)

This option permits the production of free hot water using heat reclaim by desuperheating the compressor discharge gases. The option is available for the whole 30RBSY/RQSY range, that are equipped with traditional Cu/Al coils.

A plate heat exchanger is installed in series with the air condenser coils on the compressor discharge line of each circuit.

Physical data, 30RBSY units with partial heat reclaim using desuperheaters (option 49)

30RBSY partial heat reclaim mode		039	045	050	060	070	080	090	100	120	140	160
Operating weight units with RTPF coils*												
Standard unit without hydronic module	kg	466	474	497	529	509	546	845	854	885	1005	1071
Standard unit with hydronic module option												
Single high-pressure pump	kg	496	504	527	559	539	576	877	886	921	1044	1110
Dual high-pressure pump	kg	522	529	552	584	565	602	922	931	970	1081	1147
Refrigerant charge, units with RTPF coils		R-410A										
Circuit A	kg	8.0	9.0	12.5	15.0	12.5	15.0	19.0	20.0	23.0	12.5	16.0
Circuit B	kg	-	-	-	-	-	-	-	-	-	12.5	16.0
Condensers		Grooved copper tubes. aluminium fins										
Desuperheaters on circuits A and B		Plate heat exchangers										
Water volume, circuit A	l	0.549	0.549	0.549	0.549	0.732	0.732	0.976	0.976	0.976	0.732	0.732
Water volume, circuit B	l	-	-	-	-	-	-	-	-	-	0,732	0,732
Max. water-side operating pressure without hydronic module	kPa	1000	1000	1000	1000	1000	1000	1000	1000	1000	1000	1000
Water connections		Cylindrical, male gas thread										
Connections	in	1	1	1	1	1	1	1	1	1	1	1
Outside diameter	mm	42	42	42	42	42	42	42	42	42	42	42

* Weights shown are a guideline only.

Physical data, 30RQSY units with partial heat reclaim using desuperheaters (option 49)

30RQSY partial heat reclaim mode		039	045	050	060	070	078	080	090	100	120	140	160
Operating weight units with RTPF coils													
Standard unit without hydronic module	kg	519	526	560	574	574	581	763	931	940	998	1103	1120
Standard unit with hydronic module option													
Single high-pressure pump	kg	549	556	589	603	604	611	793	962	972	1034	1142	1159
Dual high-pressure pump	kg	575	582	615	629	630	637	918	1007	1017	1082	1179	1196
Refrigerant charge, units with RTPF coils*		R-410A											
Circuit A	kg	12.5	13.5	16.5	17.5	18.0	16.5	21.5	27.5	28.5	33.0	19.0	18.5
Circuit B	kg	-	-	-	-	-	-	-	-	-	-	19.0	18.5
Condensers		Grooved copper tubes. aluminium fins											
Desuperheaters on circuits A and B		Plate heat exchangers											
Water volume, circuit A	l	0.549	0.549	0.549	0.732	0.732	0.732	0.732	0.976	0.976	0.976	0.732	0.732
Water volume, circuit B	l	-	-	-	-	-	-	-	-	-	-	0.732	0.732
Max. water-side operating pressure without hydronic module	kPa	1000	1000	1000	1000	1000	1000	1000	1000	1000	1000	1000	1000
Water connections		Cylindrical, male gas thread											
Connections	in	1	1	1	1	1	1	1	1	1	1	1	1
Outside diameter	mm	42	42	42	42	42	42	42	42	42	42	42	42

* Weights shown are a guideline only.

Operating imits

Desuperheater		Minimum	Maximum
Entering water temperature at start-up	°C	25*	60
Leaving water temperature during operation	°C	30	65
Air condenser		**Minimum**	**Maximum**
Outside air temperature	°C	-10	46

* The entering water temperature at start-up must not be lower than 25°C. For installations with a lower temperature a three-way valve is necessary.

Reclaimed heating capacities using desuperheater(s)

30RBSY 039-160

30RBSY 039-160	Desuperheater entering water temperature, °C								
	45			50			55		
	Qhr kW	q l/s	Δp kPa	Qhr kW	q l/s	Δp kPa	Qc kW	q l/s	Δp kPa
039	12.9	0.31	6.1	10.9	0.26	4.4	9.0	0.21	3.1
045	16.5	0.40	9.5	14.3	0.34	7.4	12.0	0.29	5.2
050	18.1	0.43	11.7	15.4	0.37	8.5	12.8	0.31	6.1
060	19.3	0.46	12.9	16.6	0.40	9.8	13.7	0.33	6.9
070	24.3	0.58	11.8	21.0	0.50	9.2	17.5	0.42	6.5
080	28.6	0.68	16.3	24.4	0.58	12.1	20.6	0.49	8.8
090	30.5	0.73	11.4	25.8	0.62	8.2	21.5	0.51	5.8
100	36.4	0.87	16.0	31.9	0.76	12.4	27.0	0.64	8.9
120	43.1	1.03	22.6	37.4	0.89	17.2	31.6	0.75	12.3
140 (1)	47.1	1.12	11.3	39.7	0.95	8.3	33.0	0.79	5.9
160 (1)	54.0	1.29	15.0	45.6	1.09	10.7	38.3	0.92	7.8

Legend
Qhr Total heating capacity reclaimed at the desuperheater(s), kW
q Total water flow rate in the desuperheater loop, l/s
Δp Pressure drop per desuperheater, kPa
(1) Sizes 140 and 160 are fitted with 2 desuperheaters, one per circuit.

Application data
Evaporator entering/leaving water temperature 12/7°C
Outside air temperature 35°C
Desuperheater entering/leaving water temperature difference 10 K
Evaporator fluid: chilled water
Fouling factor 0.18 x 10^{-4} (m^2 K)/W

30RQSY 039-160 cooling mode

30RQSY 039-160	Desuperheater entering water temperature, °C								
	45			50			55		
	Qhr kW	q l/s	Δp kPa	Qhr kW	q l/s	Δp kPa	Qc kW	q l/s	Δp kPa
039	10.9	0.26	4.4	9.1	0.22	3.1	7.1	0.18	2.1
045	14.4	0.34	7.5	12.2	0.29	5.4	10.0	0.24	3.7
050	17.2	0.41	10.5	14.7	0.35	7.8	12.3	0.29	5.6
060	17.4	0.44	6.6	15.1	0.36	4.6	12.3	0.29	3.0
070	21.4	0.51	9.3	17.9	0.43	6.7	14.7	0.35	4.8
078	26.8	0.64	14.7	22.5	0.54	10.4	18.8	0.45	7.5
080	23.9	0.57	12.1	21.2	0.51	7.8	16.3	0.39	5.8
090	28.1	0.67	9.9	23.9	0.57	7.1	19.7	0.47	5.1
100	33.9	0.81	14.0	28.3	0.68	10.1	23.7	0.57	7.2
120	37.7	0.90	17.5	31.7	0.76	12.4	26.5	0.63	8.9
140 (1)	42.9	1.03	9.4	35.5	0.85	6.7	14.5	0.35	4.5
160 (1)	52.3	1.25	14.1	44.2	1.06	10.1	18.3	0.44	7.1

Legend
Qhr Total heating capacity reclaimed at the desuperheater(s), kW
q Total water flow rate in the desuperheater loop, l/s
Δp Pressure drop per desuperheater, kPa
(1) Sizes 140 and 160 are fitted with 2 desuperheaters, one per circuit.

Application data
Evaporator entering/leaving water temperature 12/7°C
Outside air temperature 35°C
Desuperheater entering/leaving water temperature difference 10 K
Evaporator fluid: chilled water
Fouling factor 0.18 x 10^{-4} (m^2 K)/W

30RQSY 039-160 heating mode

30RQSY 039-160	Desuperheater entering water temperature, °C								
	45			50			55		
	Qhr kW	q l/s	Δp kPa	Qhr kW	q l/s	Δp kPa	Qc kW	q l/s	Δp kPa
039	10.1	0.24	3.8	8.3	0.20	2.7	6.8	0.16	1.8
045	11.1	0.27	4.6	9.3	0.22	3.3	7.7	0.18	2.3
050	14.0	0.33	7.1	11.8	0.28	5.2	9.9	0.24	3.6
060	14.3	0.34	4.4	11.8	0.28	3.0	9.4	0.22	2.0
070	17.1	0.41	6.3	14.4	0.34	4.5	11.9	0.28	3.1
078	19.1	0.46	7.8	16.0	0.38	5.6	13.2	0.32	3.9
080	17.5	0.42	6.6	14.6	0.35	4.8	11.7	0.28	3.2
090	21.4	0.51	6.0	17.7	0.42	4.1	14.7	0.35	2.8
100	20.6	0.49	5.1	16.5	0.39	3.4	12.7	0.30	2.0
120	23.0	0.55	6.9	18.5	0.44	4.7	14.5	0.35	3.0
140 (1)	32.0	0.77	5.5	26.7	0.64	3.8	21.6	0.52	2.6
160 (1)	37.5	0.90	7.3	31.2	0.75	5.4	25.4	0.61	3.7

Legend
Qhr Total heating capacity reclaimed at the desuperheater(s), kW
q Total water flow rate in the desuperheater loop, l/s
Δp Pressure drop per desuperheater, kPa
(1) Sizes 140 and 160 are fitted with 2 desuperheaters, one per circuit.

Application data
Evaporator entering/leaving water temperature 40/45°C
Outside air temperature 7°C
Desuperheater entering/leaving water temperature difference 10 K
Condenser fluid: water
Fouling factor 0.18 x 10^{-4} (m^2 K)/W

Hydronic module (option 116)

This module is equipped with pressure transducers to optimise unit operation at the hydronic level.

The hydronic module option reduces the installation time. The unit is factory-equipped with the main hydronic components required for the system: Screen filter, water pump, expansion tank, relief valve and water pressure transducers.

The pressure transducers allow the Touch Pilot Junior control to:
- Display the available pressure at the unit outlet and the static system pressure
- Calculate the instantaneous flow rate, using an algorithm that integrates the unit characteristics
- Integrate the system and water pump protection devices (lack of water, water pressure, water flow rate etc.)

Several water pump types are available: Primary single or dual low-pressure pump or single or dual high-pressure pump.

An automatic pump start-up algorithm protects the heat exchanger and the hydronic module piping against frost down to -10°C(30RBSY)/0°C(30RQSY) outside temperature, if the water heat exchanger frost protection option is installed. If necessary increased frost protection down to -20°C is possible by adding heaters to the hydronic module piping (see option 42).

The hydronic module option is integrated into the unit without increasing its dimensions and saves the space normally used for the water pump.

Typical hydronic circuit diagram

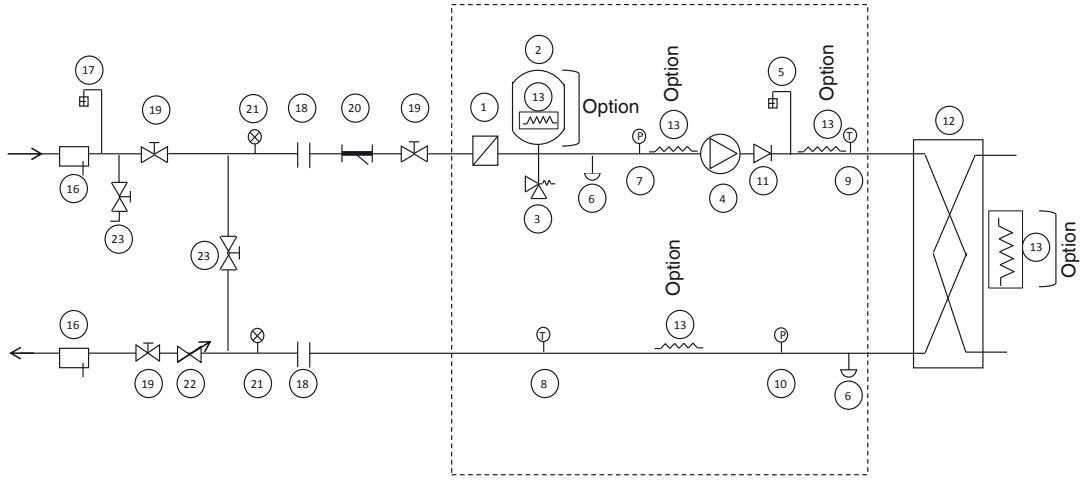

Legend

Components of the unit and hydronic module
1 Screen filter (Mesh1.2 mm)
2 Expansion tank (option)
3 Discharge valve
4 Available pressure pump (single pump, or dual pump)
5 Air purge
6 Water drain valve
7 Pressure sensor
Note: Gives pump suction pressure information (see regulation manual)
8 Temperature probe
Note: Gives heat exchanger leaving temperature information (see regulation manual)
9 Temperature probe
Note: Gives heat exchanger entering temperature information (see regulation manual)
10 Pressure sensor
Note: Gives heat exchanger leaving pressure information (see regulation manual)
11 Check valve (If dual pump)
12 Plate heat exchanger
13 Heater or tracer for frost protection (Option)
14 Flow sensor for water heat exchange

Installation components
16 Thermowell
17 Air purge
18 Flexible connexion
19 Shut-off valve
20 Screen filter (obligatory for a unit without hydronic module)
21 Pressure gauge
22 Water flow control valve
Note: Not necessary for a hydronic module with a variable-speed pump
23 Charge valve
24 Frost protection bypass valve (when shut-off valves (19) are closed during winter)
25 Buffer tank (if necessary)

--- Hydronic module (unit with hydronic module)

Notes:
- The system must be protected against frost.
- The hydronic module of the unit and the exchanger can be protected (option factory installed) against frost with electric heaters and tracers (13).
- The pressure sensors are installed at connections without Schraeder valves. Depressurise and drain the system before any intervention.

Electrical data, units with hydronic modules

The pumps that are factory-installed in these units have motors with efficiency class IE2. The additional electrical data required by regulation 640/2009 is given in the installation, operation and maintenance manual.

This regulation concerns the application of directive 2005/32/EC on the eco-design requirements for electric motors.

Variable water flow system (VWF)

Variable water flow is a hydronic control function package that permits control of the water flow rate.

The VWF not only ensures control at full load, a specific Carrier algorithm linked to an electronic frequency converter also continuously modulates the flow rate to minimise pump consumption at full load as well as part load.

The hydronic module includes pressure transducers that permit intelligent measurement of the water flow rate and real-time display on the Touch Pilot Junior interface. All adjust-ments can be made directly on the interface, speeding up start-up and maintenance.

As VWF acts directly on the pump, the system no longer requires the control valve at the unit outlet. However, for applications with two-way valves a bypass system must be kept to guarantee the minimum flow rate.

Operating logic

- Full-load set point
  The flow rate control at full load uses the Touch Pilot Junior interface, reducing the pump speed. This first control saves energy that would normally be dissipated in the control valve. For example, if the pressure supplied by the pump is reduced by 20% the power consumption of the pump is reduced by the same ratio, compared to a traditional installation.

- Operating mode at part load
  Touch Pilot Junior includes two part-load operating modes:
  - Constant outlet pressure control
  - Constant delta T control.

1 – Constant unit outlet pressure control

The control continuously acts on the pump speed to ensure a constant outlet pressure.

This solution is suitable for installations with two-way valves. When these close, the water speed will accelerate in the system branches that are still open. For a fixed-speed pump this results in an unnecessary increase of the pressure at the pump outlet.

The outlet pressure control mode ensures that each circuit branch always has a uniform supply, without unnecessary energy waste.

In industrial processes such as plastic injection moulding, this solution ensures that each terminal unit has the correct pressure supply.

2 – Constant delta T control

The VWF algorithm maintains a constant delta T no matter what the unit load, reducing the flow rate to the minimum.

This solution can be used for systems with two-way or three-way valves and achieves higher energy savings than the “Constant unit outlet pressure control” mode. It is suitable for the majority of comfort applications.

Physical data, 30RBSY

30RBSY				039	045	050	060	070	080	090	100	120	140	160
Cooling														
Standard unit	C1	Nominal capacity	kW	39.6	44.0	51.2	58.1	66.2	77.7	86.7	97.1	114.4	132.8	153.4
Full load performances*	C1	EER	kW/kW	2.89	2.78	2.66	2.68	2.66	2.63	2.69	2.70	2.66	2.64	2.58
	C1	Eurovent class cooling		A	A	B	B	B	B	B	A	B	B	B
	C2	Nominal capacity	kW	53.0	58.9	68.5	80.8	83.6	97.0	114.3	126.5	150.8	168.9	191.7
	C2	EER	kW/kW	3.47	3.35	3.11	3.33	2.89	2.97	3.13	3.06	3.09	2.91	2.92
Full load performances**	C1	Gross nominal capacity	kW	39.9	44.4	51.6	58.6	66.8	78.4	87.2	97.7	115.1	133.6	154.4
	C1	Gross EER	kW/kW	2.69	2.63	2.56	2.59	2.55	2.54	2.55	2.58	2.56	2.52	2.48
	C2	Gross nominal capacity	kW	53.5	59.4	69.3	81.7	84.3	97.9	115.3	127.4	152.1	170.3	193.4
	C2	Gross EER	kW/kW	3.31	3.23	3.06	3.29	2.82	2.92	3.02	2.97	3.03	2.83	2.86
Seasonal efficiency*	C1	ESEER	kW/kW	3.81	3.95	3.9	3.85	3.65	3.68	3.74	3.8	3.79	3.99	4.16
Seasonal efficiency**	C1	Gross ESEER	kW/kW	3.28	3.46	3.56	3.54	3.31	3.39	3.26	3.35	3.41	3.40	3.61
IPLV			kW/kW	3.69	3.89	3.99	3.95	3.66	3.78	3.52	3.61	3.76	3.69	4.00
Sound levels														
Standard unit - for 160 Pa external static pressure														
Sound power level at discharge (1)			dB(A)	84	84	84	84	87	87	87	87	87	90	90
Sound power level radiated (1)				84	84	84	84	87	87	87	87	87	90	90
Sound pressure level at 10 m(2)			dB(A)	53	53	53	53	55	55	56	56	56	58	58
Dimensions				If two values are shown the first one is for standard units and the second one for units with option 23B										
Length			mm	2142/2307	2142/2307	2142/2307	2142/2307	2142/2307	2142/2307	2273	2273	2273	2273	2273
Width			mm	1132/1297	1132/1297	1132/1297	1132/1297	1132/1297	1132/1297	2122	2122	2122	2122	2122
Height			mm	1371	1371	1371	1371	1371	1371	1371	1371	1371	1371	1371
Operating weight with MCHE coil (3)														
Standard unit without hydronic module			kg	436	443	449	464	461	480	771	780	793	901	932
Standard unit with hydronic module														
Single high-pressure pump			kg	466	473	479	494	491	510	803	812	829	940	971
Dual high-pressure pump			kg	491	499	504	520	517	536	848	857	877	977	1008
Compressors				Hermetic scroll compressors, 48.3 r/s										
Circuit A				2	2	2	2	2	2	3	3	3	2	2
Circuit B				-	-	-	-	-	-	-	-	-	2	2
No of control stages				2	2	2	2	2	2	3	3	3	4	4
Refrigerant charge with MCHE coil(3)				R-410A										
Circuit A			kg	4.7	5.3	**5.9**	6.7	6.2	7.3	10.7	10.8	11.4	6.5	7.4
			$teqCO_2$	9.8	11.1	12.3	14.0	12.9	15.2	22.3	22.6	23.8	13.6	15.5
Circuit B			kg	-	-	-	-	-	-	-	-	-	6.5	7.4
			$teqCO_2$										13.6	15.5
Capacity control				Touch Pilot Junior										
Minimum capacity			%	50	50	50	50	50	50	33	33	33	25	25
Condensers				All aluminium microchannel heat exchanger (MCHE)										
Fans				Axial Flying Bird IV with rotating shroud										
Quantity				1	1	1	1	1	1	2	2	2	2	2
Maximum total air flow			l/s	3885	3883	3687	3908	4982	5267	6940	6936	7370	9958	10534
Maximum rotation speed			r/s	16	16	16	16	18	18	16	16	16	18	18
Evaporator				Direct expansion, plate heat exchanger										
Water volume			l	2.6	3	3.3	4	4.8	5.6	8.7	9.9	11.3	12.4	14.7
Without hydronic module (option)														
Max. water-side operating pressure			kPa	1000	1000	1000	1000	1000	1000	1000	1000	1000	1000	1000
With hydronic module (option)														
Single or dual pump (as selected)				Pump, Victaulic screen filter, relief valve, expansion tank, purge valves (water + air), pressure sensors										
Expansion tank volume			l	12	12	12	12	12	12	35	35	35	35	35
Expansion tank pressure (4)			bar	1	1	1	1	1	1	1.5	1.5	1.5	1.5	1.5
Max. water-side operating pressure			kPa	400	400	400	400	400	400	400	400	400	400	400
Water connections with/without hydronic module				Victaulic										
Diameter			in	2	2	2	2	2	2	2	2	2	2	2
Outside tube diameter			mm	60.3	60.3	60.3	60.3	60.3	60.3	60.3	60.3	60.3	60.3	60.3
Chassis paint colour				Colour code: RAL7035										

* In accordance with standard EN14511-3:2013

** Not in accordance with standard EN14511-3:2013.These performances do not take into account the correction for the proportionnal heating capacity and power input generated by the water pump to overcome the internal pressure drop in the heat exchanger.

C1 Cooling mode conditions: evaporator water entering/leaving temperature 12°C/7°C, outside air temperature 35°C, evaporator fooling factor 0 m^2.K/W

C2 Cooling mode conditions: evaporator water entering/leaving temperature 23°C/18°C, outside air temperature 35°C, evaporator fooling factor 0 m^2.K/W

IPLV Calculations according to standard performances (in accordance with AHRI 550-590)

(1) In dB ref=10^{-12} W, (A) weighting. Declared dualnumber noise emission values in accordance with ISO 4871 (with an associated uncertainty of +/-3dB(A)). Measured in accordance with ISO 9614-1 and certified by Eurovent.

(2) In dB ref 20µPa, (A) weighting. Declared dualnumber noise emission values in accordance with ISO 4871 (with an associated uncertainty of +/-3dB(A)). For information, calculated from the sound power level Lw(A).

(3) Values shown are a guideline only. Please refer to the unit nameplate

(4) When delivered, the standard pre-inflation of the tank is not necessarily the optimal value for the system. To permit changing the water volume, change the inflation pressure to a pressure that is close to the static head of the system. Fill the system with water (purging the air) to a pressure value that is 10 to 20 kPa higher than the pressure in the tank

Eurovent certified values

Physical data, 30RQSY

30RQSY				39	45	50	60	70	78	80	90	100	120	140	160
Cooling															
Standard unit	C1	Nominal capacity	kW	37	43	50	58	63	73	78	86	96	113	130	147
Full load performances*	C1	EER	kW/kW	2.88	2.79	2.70	2.79	2.70	2.56	2.80	2.71	2.72	2.74	2.76	2.57
	C1	Eurovent class cooling		A	A	A	A	A	B	A	A	A	A	A	B
	C2	Nominal capacity	kW	47	54	63	70	78	91	97	108	118	143	160	184
	C2	EER	kW/kW	3.32	3.26	3.15	3.14	3.08	2.94	3.20	3.15	3.14	3.14	3.15	2.90
Full load performances**	C1	Gross nominal capacity	kW	37	44	50	58	63	73	78	86	96	114	130	148
	C1	Gross EER	kW/kW	2.68	2.64	2.57	2.61	2.56	2.46	2.60	2.56	2.59	2.62	2.62	2.46
	C2	Gross nominal capacity	kW	47	55	64	71	78	92	98	109	119	144	162	185
	C2	Gross EER	kW/kW	3.14	3.13	3.04	2.98	2.96	2.87	3.02	3.01	3.02	3.05	3.03	2.82
Seasonal efficiency*	C1	ESEER	kW/kW	3.89	3.94	3.86	3.82	3.74	3.66	3.73	3.67	3.81	4.04	4.10	4.04
Seasonal efficiency**	C1	Gross ESEER	kW/kW	3.34	3.47	3.42	3.30	3.33	3.35	3.22	3.15	3.34	3.58	3.48	3.49
Heating															
Standard unit	H1	Nominal capacity	kW	42	47	53	62	70	78	80	93	101	117	139	159
Full load performances*	H1	COP	kW/kW	3.16	3.13	3.03	3.16	3.17	3.02	3.21	3.08	3.05	3.07	3.14	2.99
	H1	Eurovent class heating		A	A	A	A	A	A	A	A	A	A	A	B
	H2	Nominal capacity	kW	43	47	55	63	72	80	83	95	103	121	142	163
	H2	COP	kW/kW	3.83	3.83	3.75	3.93	3.88	3.66	3.90	3.81	3.74	3.75	3.85	3.62
Full load performances**	H1	Gross nominal capacity	kW	42	46	53	61	70	77	79	92	100	116	138	158
	H1	Gross COP	kW/kW	2.86	2.86	2.80	2.87	2.92	2.81	2.87	2.81	2.81	2.85	2.89	2.81
	H2	Gross nominal capacity	kW	42	47	54	63	71	80	82	94	102	120	141	162
	H2	Gross COP	kW/kW	3.41	3.45	3.41	3.51	3.53	3.38	3.44	3.42	3.39	3.45	3.49	3.37
Seasonal efficiency***	H1	SCOP	kW/kW	2.98	3.01	2.98	3.10	3.12	3.07	3.05	3	2.99	3.05	3.17	3.12
	H1	ηs heat	%	116	117	116	121	122	120	119	117	117	119	124	122
	H1	Prated	kW	33	37	42	51	58	65	66	77	84	96	114	132
IPLV			kW/kW	3.74	3.89	3.76	3.63	3.63	3.81	3.59	3.42	3.60	3.99	3.74	3.88
Sound levels															
Standard unit - for 160 Pa external static pressure															
Sound power level at discharge (1)			dB(A)	84	84	84	87	87	87	87	87	87	87	90	90
Sound power level radiated(1)				84	84	84	87	87	87	87	87	87	87	90	90
Sound pressure level at 10 m(2)			dB(A)	53	53	53	55	55	55	56	56	56	56	58	58
Dimensions				If two values are shown the first one is for standard units and the second one for units with option 23B											
Length			mm	2142/2307	2142/2307	2142/2307	2142/2307	2142/2307	2142/2307	2273	2273	2273	2273	2273	2273
Width			mm	1132/1297	1132/1297	1132/1297	1132/1297	1132/1297	1132/1297	2122	2122	2122	2122	2122	2122
Height			mm	1371	1371	1371	1371	1371	1371	1371	1371	1371	1371	1371	1371
Operating weight (3)															
Standard unit without hydronic module			kg	512	519	553	567	567	574	753	921	930	988	1084	1101
Standard unit with hydronic module															
Single high-pressure pump			kg	542	549	582	596	597	604	783	952	962	1024	1123	1140
Dual high-pressure pump			kg	568	575	608	622	623	630	809	997	1007	1072	1160	1177
Compressors				Hermetic scroll compressors, 48.3 r/s											
Circuit A				2	2	2	2	2	2	2	3	3	3	2	2
Circuit B				-	-	-	-	-	-	-	-	-	-	2	2
No of control stages				2	2	2	2	2	2	2	3	3	3	4	4
Refrigerant charge (3)				R-410A											
Circuit A			kg	12.5	13.5	16.5	17.5	18	16.5	21.5	27.5	28.5	33	19	18.5
			teqCO$_2$	26.1	28.2	34.5	36.5	37.6	34.5	44.9	57.4	59.5	68.9	39.7	38.6
Circuit B			kg	-	-	-	-	-	-	-	-	-	-	19	18.5
			teqCO$_2$											39.7	38.6
Oil charge (3)				R-410A											
Circuit A			l	5.8	7.2	7.2	7.2	7.0	7.0	7.2	7.0	7.0	7.0	7.0	7.0
Circuit B			l	-	-	-	-	-	-	-	-	-	-	7.0	7.0
Capacity control				Touch Pilot Junior											
Minimum capacity			%	50	50	50	50	50	50	50	33	33	33	25	25

* In accordance with standard EN14511-3:2013

** Not in accordance with standard EN14511-3:2013.These performances do not take into account the correction for the proportionnal heating capacity and power input generated by the water pump to overcome the internal pressure drop in the heat exchanger.

*** In accordance with standard EN14825:2013, average climate

C1 Cooling mode conditions: evaporator water entering/leaving temperature 12°C/7°C, outside air temperature 35°C, evaporator fooling factor 0 m^2.K/W

C2 Cooling mode conditions: evaporator water entering/leaving temperature 23°C/18°C, outside air temperature 35°C, evaporator fooling factor 0 m^2.K/W

H1 Heating mode conditions: water heat exchanger water entering/leaving temperature 40°C/45°C, outside air temperature 7°C db/6°C wb, evaporator fooling factor 0 m^2.K/W

H2 Heating mode conditions: water heat exchanger water entering/leaving temperature 30°C/35°C, outside air temperature 7°C db/6°C wb, evaporator fooling factor 0 m^2.K/W

IPLV Calculations according to standard performances (in accordance with AHRI 550-590)

(1) In dB ref=10^{-12} W, (A) weighting. Declared dualnumber noise emission values in accordance with ISO 4871 (with an associated uncertainty of +/-3dB(A)). Measured in accordance with ISO 9614-1 and certified by Eurovent.

(2) In dB ref 20µPa, (A) weighting. Declared dualnumber noise emission values in accordance with ISO 4871 (with an associated uncertainty of +/-3dB(A)). For information, calculated from the sound power level Lw(A).

(3) Values shown are a guideline only. Please refer to the unit nameplate

Eurovent certified values

Physical data, 30RQSY (continued)

30RQSY		39	45	50	60	70	78	80	90	100	120	140	160
Air heat exchangers		Grooved copper tubes and aluminium fins											
Fans		Axial Flying Bird IV with rotating shroud											
Quantity		1	1	1	1	1	1	2	2	2	2	2	2
Maximum total air flow	l/s	3692	3690	3910	5278	4982	5267	7770	7380	7376	7818	9964	10534
Maximum rotation speed	r/s	16	16	16	18	18	18	16	16	16	16	18	18
Water heat exchanger (direct-expansion type)		Plate heat exchanger, max. water-side operating pressure without hydronic module 1000 kPa											
Water volume	l	2.6	3	4	4.8	4.8	5.6	8.7	8.7	9.9	11.3	12.4	14.7
With hydronic module (option)													
Single or dual pump (as selected)		Pump, Victaulic screen filter, relief valve, expansion tank, purge valves (water + air), pressure sensors											
Expansion tank volume	l	12	12	12	12	12	12	35	35	35	35	35	35
Expansion tank pressure (4)	bar	1	1	1	1	1	1	1	1.5	1.5	1.5	1.5	1.5
Max. water-side operating pressure	kPa	400	400	400	400	400	400	400	400	400	400	400	400
Water connections with/without hydronic module		Victaulic											
Connections	in	2	2	2	2	2	2	2	2	2	2	2	2
Outside diameter	mm	60.3	60.3	60.3	60.3	60.3	60.3	60.3	60.3	60.3	60.3	60.3	60.3
Chassis paint colour		Colour code: RAL7035											

(4) When delivered, the standard pre-inflation of the tank is not necessarily the optimal value for the system. To permit changing the water volume, change the inflation pressure to a pressure that is close to the static head of the system. Fill the system with water (purging the air) to a pressure value that is 10 to 20 kPa higher than the pressure in the tank

Electrical data, 30RBSY

30RBSY without hydronic module		039	045	050	060	070	080	090	100	120	140	160
Power circuit												
Nominal power supply	V-ph-Hz	400-3-50										
Voltage range	V	360-440										
Control circuit supply		24 V via internal transformer										
Maximum start-up current (Un)*												
Standard unit	A	116	137	145	148	176	213	179	213	253	244	287
Unit with electronic starter option	A	75	87	94	96	114	140	130	155	181	186	215
Unit power factor at maximum capacity**		0.83	0.81	0.81	0.83	0.81	0.78	0.83	0.81	0.79	0.81	0.78
Maximum operating power input**	kW	21	24	26	30	32	36	46	49	56	64	73
Nominal unit operating current draw***	A	28	32	36	39	43	53	61	67	83	86	106
Maximum operating current draw (Un)****	A	37	47	49	55	67	73	86	104	113	135	147
Maximum operating current draw (Un-10%)†	A	41	52	54	61	75	80	94	116	123	150	160
Customer-side unit power reserve		Customer reserve at the 24 V control power circuit										
Short-circuit stability and protection		See table 9.1										

* Maximum instantaneous start-up current at operating limit value (maximum operating current of the smallest compressor(s) + fan current + locked rotor current of the largest compressor).
** Power input, at the unit permanent maximum operating conditions (data given on the unit nameplate)
*** Standardised Eurovent conditions: evaporator entering/leaving water temperature 12°C/7°C, outside air temperature 35°C.
**** Maximum unit current at 400 V, non permanent operating conditions (values given on the unit nameplate).
† Maximum unit operating current at 360 V, non permanent operating conditions.

Short-circuit stability current (TN system*)

30RBSY	039	045	050	060	070	080	090	100	120	140	160
Value with unspecified upstream protection											
Short-term current at 1s - Icw – kA rms	3.36	3.36	3.36	3.36	3.36	3.36	5.62	5.62	5.62	5.62	5.62
Admissible peak current - Ipk - kA pk	20	20	20	20	20	15	20	20	15	20	15
Max. value with upstream protection by circuit breaker											
Conditional short-circuit current Icc - kA rms	40	40	40	40	40	40	40	40	40	30	30
Schneider circuit breaker - Compact series	NS100H	NS100H	NS100H	NS100H	NS100H	NS100H	NS100H	NS160H	NS160H	NS250H	NS250H
Reference No.**	29670	29670	29670	29670	29670	29670	29670	30670	30670	31671	31671

* Earthing system type
** If another current limitation protection system is used, its time-current and thermal constraint (I^2t) trip characteristics must be at least equivalent to those of the recommended Schneider circuit breaker. Contact your nearest Carrier office.
The short-circuit stability current values above are in accordance with the TN system.

Electrical data, 30RQSY

30RQSY without hydronic module		039	045	050	060	070	078	080	090	100	120	140	160
Power circuit													
Nominal power supply	V-ph-Hz	400-3-50											
Voltage range	V	360-440											
Control circuit supply		24 V via internal transformer											
Maximum start-up current (Un)*													
Standard unit	A	116	137	145	148	176	213	219	179	213	253	244	287
Unit with electronic starter option	A	75	87	94	96	114	143	149	130	155	181	186	215
Unit power factor at maximum capacity**		0.83	0.81	0.81	0.83	0.81	0.83	0.83	0.83	0.81	0.79	0.81	0.78
Maximum operating power input**	kW	21	24	26	30	32	36	39	46	49	56	64	73
Nominal unit operating current draw***	A	28	32	36	39	43	53	59	61	67	83	86	106
Maximum operating current draw (Un)****	A	37	47	49	55	67	73	79	86	104	113	135	147
Maximum operating current draw (Un-10%)†	A	41	52	54	61	75	80	85	94	116	123	150	160
Customer-side unit power reserve		Customer reserve at the 24 V control power circuit											
Short-circuit stability and protection		See table 9.1											

* Maximum instantaneous start-up current at operating limit value (maximum operating current of the smallest compressor(s) + fan current + locked rotor current of the largest compressor).
** Power input, at the unit permanent maximum operating conditions (data given on the unit nameplate)
*** Standardised Eurovent conditions: evaporator entering/leaving water temperature 12°C/7°C, outside air temperature 35°C.
**** Maximum unit current at 400 V, non permanent operating conditions (values given on the unit nameplate).
† Maximum unit operating current at 360 V, non permanent operating conditions.

Short-circuit stability current (TN system*)

30RQSY	039	045	050	060	070	078	080	090	100	120	140	160
Value with unspecified upstream protection												
Short-term current at 1s - Icw – kA rms	3.36	3.36	3.36	3.36	3.36	3.36	3.36	5.62	5.62	5.62	5.62	5.62
Admissible peak current - Ipk - kA pk	20	20	20	20	20	15	15	20	20	15	20	15
Max. value with upstream protection by circuit breaker												
Conditional short-circuit current Icc - kA rms	40	40	40	40	40	40	40	40	40	40	30	30
Schneider circuit breaker - Compact series	NS100H	NS100H	NS100H	NS100H	NS100H	NS100H	NS100H	NS100H	NS160H	NS160H	NS250H	NS250H
Reference No.**	29670	29670	29670	29670	29670	29670	29670	29670	30670	30670	31671	31671

* Earthing system type
** If another current limitation protection system is used, its time-current and thermal constraint (I^2t) trip characteristics must be at least equivalent to those of the recommended Schneider circuit breaker. Contact your nearest Carrier office.
The short-circuit stability current values above are in accordance with the TN system.

Part load performances

With the rapid increase in energy costs and the care about environmental impacts of electricity production, the power consumption of air conditioning equipment has become an important topic. The energy efficiency of a unit at full load is rarely representative of the actual performance of the units, as on average a unit works less than 5% of the time at full load.

The heat load of a building depends on many factors, such as the outside air temperature, the exposure to the sun and the building occupancy.

Consequently it is preferable to use the average energy efficiency, calculated at several operating points that are representative for the unit utilisation.

IPLV (in accordance with AHRI 550/590)

The IPLV (integrated part load value) allows evaluation of the average energy efficiency based on four operating conditions defined by the AHRI (Air Conditioning, Heating and Refrigeration Institute). The IPLV is the average weighted value of the energy efficiency ratios (EER) at different operating conditions, weighted by the operating time.

ESEER (in accordance with EUROVENT)

The ESEER (European seasonal energy efficiency ratio) permits evaluation of the average energy efficiency at part load, based on four operating conditions defined by Eurovent. The ESEER is the average value of energy efficiency ratios (EER) at different operating conditions, weighted by the operating time.

IPLV (integrated part load value)

Load %	Air temperature °C	Energy efficiency	Operating time %
100	35	EER_1	1
75	26.7	EER_2	42
50	18.3	EER_3	45
25	12.8	EER_4	12
ESEER =	EER_1 x 1% + EER_2 x 42% + EER_3 x 45% + EER_4 x 12%		

Note: Constant leaving water temperature 6.67°C.

ESEER (European seasonal energy efficiency ratio)

Load %	Air temperature °C	Energy efficiency	Operating time %
100	35	EER_1	3
75	30	EER_2	33
50	25	EER_3	41
25	20	EER_4	23
ESEER =	EER_1 x 3% + EER_2 x 33% + EER_3 x 41% + EER_4 x 23%		

Note: Constant leaving water temperature 7°C.

SCOP (In accordance with standard EN14825:2013, average climate)

The SCOP (Seasonal Coefficient of Performance) permit evaluation of the average energy efficienty at part load, based on multipoint conditions (16°C to -10°C for average climate) and number of hours occurring at each air temperature (Bin hours). To be able to compare the energy efficiency of boilers using a primary energy source (gas or fuel) with heat pumps using a final energy source (electricity), the seasonal efficiency criteria used by the Ecodesign regulations is known as ηs it is based on the use of primary energy sources and expressed in %

Electrical data and operating conditions notes:

- 30RBSY/RQSY 039-160 units have a single power connection point located immediately upstream of the field power connections.
- The control box includes the following standard features:
  - Starter and motor protection devices for each compressor, the fans and the pump
  - The control devices.
  - A main disconnect switch can be installed within the box with the option 70.
- Field connections:
  All connections to the system and the electrical installations must be in full accordance with all applicable local codes.
- The Carrier 30RBSY/RQSY units are designed and built to ensure conformance with these codes. The recommendations of European standard EN 60204-1 (machine safety - electrical machine components - part 1: general regulations - corresponds to IEC 60204-1) are specifically taken into account, when designing the electrical equipment*.
- An auxiliary contactor is available with the QF breaker allowing a safety channel installation to ensure a feedback output about heater and board power supply status and then prevent evaporator from frosting when heaters and boards are off.

NOTES:

- Generally the recommendations of IEC 60364 are accepted as compliance with the requirements of the installation directives. Conformance with EN 60204-1 is the best means of ensuring compliance with the Machines Directive § 1.5.1.
- Annex B of EN 60204-1 describes the electrical characteristics used for the operation of the machines.
- The operating environment for the 30RBSY/RQSY units is specified below:

1. Environment** - Environment as classified in EN 60721 (corresponds to IEC 60721):
   - Outdoor installation**
   - Ambient temperature range: -20°C to +48°C, class 4K4H
   - Altitude: ≤ 2000 m (for hydronic kit see chapter 9.2 of the installation manual)
   - Presence of hard solids, class 4S2 (no significant dust present)
   - Presence of corrosive and polluting substances, class 4C2 (negligible)
2. Power supply frequency variation: ± 2 Hz.
3. The neutral (N) conductor must not be connected directly to the unit (if necessary use a transformer).
4. Overcurrent protection of the power supply conductors is not provided with the unit.
5. The factory-installed disconnect switch (option 70) is of a type suitable for power interruption in accordance with EN 60947.
6. The units are designed for connection to TN(S) networks (IEC 60364). For IT networks the earth connection must not be at the network earth. Provide a local earth, consult competent local organisations to complete the electrical installation. Units delivered with speed drive (options 116J/K/V/W) are not compatible with IT network.

Caution: If particular aspects of an actual installation do not conform to the conditions described above, or if there are other conditions which should be considered, always contact your local Carrier representative.

* The absence of main power disconnect switch on standard machines is an exception that must be taken in account at field installation level.

** The required protection level for this class is IP43BW (according to reference document IEC 60529). All 30RBSY/RQSY units fulfil this protection condition.
- Closed electrical box is IP44CW
- Open electrical box (when accessing to interface) is IPxxB

Operating limits, 30RBSY

Evaporator water flow rate

30RBSY	Flow rate, l/s			
	Minimum	Maximum*	Maximum dual pump**	
			Low pressure***	High pressure***
039	0.9	3.0	2.9	3.4
045	0.9	3.4	3.2	3.8
050	0.9	3.7	3.3	4.0
060	0.9	4.2	3.7	4.4
070	1.0	5.0	4.1	5.0
080	1.2	5.5	4.4	5.2
090	1.3	6.8	5.1	6.2
100	1.5	7.7	6.3	6.5
120	1.7	8.5	6.5	8.0
140	2.0	10.6	7.9	8.7
160	2.3	11.2	8.2	8.9

* Maximum flow rate at a pressure drop of 100 kPa in the plate heat exchanger (unit without hydronic module).
** Maximum flow rate at an available pressure of 20 kPa (unit with low-pressure hydronic module) or 50 kPa (high-pressure module).
*** Maximum flow rate with single pump is 2 to 4% higher, depending on the size.

Operating range

30RBSY		Minimum	Maximum
Evaporator			
Entering water temperature at start-up	°C	7.5*	30
Leaving water temperature during operation	°C	5**	20
Entering/leaving water temperature difference	K	3	10
Condenser			
Entering air temperature, full load***	°C	-20	46
Entering air temperature, part load***	°C	-20	48
Hydronic module**			
Entering air temperature			
Kit without pump	°C	-20	-
Kit with pump (option 116x)	°C	-10	-
Kit with pump (option 116x) and frost protection option to -20°C (option 42)	°C	-20	-

Note: Do not exceed the maximum operating temperature.

* For entering water temperatures below 7.5°C at start-up, contact Carrier.
** For low-temperature applications, where the leaving water temperature is below 5°C, a frost protection solution must be used.
*** For transport and storage of the 30RBSY units the minimum and maximum allowable temperatures are -20°C and +48°C. It is recommended that these temperatures are used for transport by container.
**** Defines the frost-free temperature of the hydronic components for use without glycol.

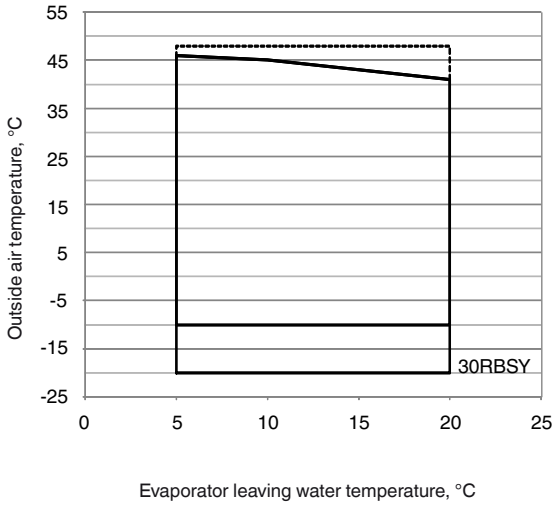

Note: This operating range applies up top 130 Pa static pressure without suction air
duct for sizes 070-080 and 140-160, and up to 240 Pa for all other sizes.

Operating limits, 30RQSY

Water heat exchanger water flow rate

30RQSY	Flow rate, l/s			
	Minimum	Maximum*	Maximum dual pump**	
			Low pressure***	High pressure***
039	0.9	3.0	2.9	3.4
045	0.9	3.4	3.2	3.8
050	0.9	4.2	3.7	4.4
060	0.9	5.0	4.1	5.0
070	1.0	5.0	4.1	5.0
078	1.2	5.5	4.4	5.2
080	1.2	6.8	5.1	6.2
090	1.3	6.8	5.1	6.2
100	1.5	7.7	6.3	6.5
120	1.7	8.5	6.5	8.0
140	2.0	10.6	7.9	8.7
160	2.3	11.2	8.2	8.9

* Maximum flow rate at a pressure drop of 100 kPa in the plate heat exchanger (unit without hydronic module).
** Maximum flow rate at an available pressure of 20 kPa (unit with low-pressure hydronic module) or 50 kPa (high-pressure module).
*** Maximum flow rate with single pump is 2 to 4% higher, depending on the size.

Operating range, standard unit, cooling mode

30RQSY		Minimum	Maximum
Evaporator			
Entering water temperature at start-up	°C	7,5*	30
Leaving water temperature during operation	°C	5**	20
Entering/leaving water temperature difference	K	3	10
Condenser			
Entering air temperature***	°C	-20	46

Note: Do not exceed the maximum operating temperature.

* For entering water temperatures below 7.5°C at start-up, contact Carrier.
** For low-temperature applications, where the leaving water temperature is below 5°C, a frost protection solution must be used.
*** For transport and storage of the 30RQSY units the minimum and maximum allowable temperatures are -20°C and +48°C. It is recommended that these temperatures are used for transport by container.

30RQSY (cooling mode)

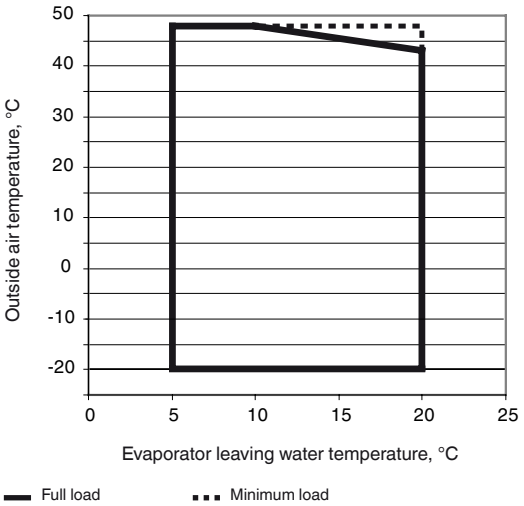

Note: This operating range applies up top 130 Pa static pressure without suction air duct for sizes 060, 070 and 078 and 140-160, and up to 240 Pa for all other sizes.

Operating range, standard unit, heating mode

30RQSY		Minimum	Maximum
Condenser			
Entering water temperature at start-up	°C	8	45
Leaving water temperature during operation	°C	25	55
Entering/leaving water temperature difference	K	3	10
Evaporator			
Air temperature	°C	-15	40

Note: Do not exceed the maximum operating temperature.

30RQSY (heating mode)

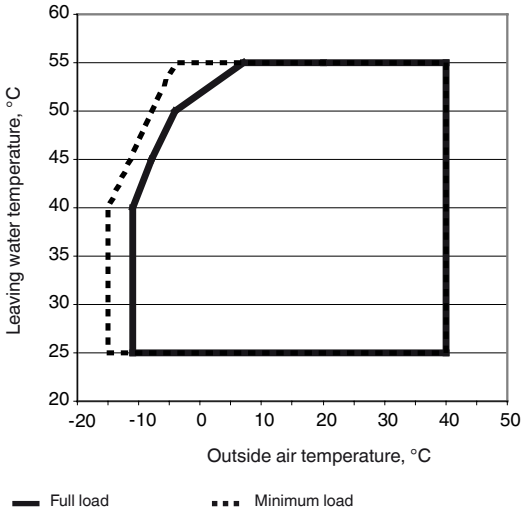

Available external static pressure, 30RBSY

Data applicable for:
- Fresh water 20 °C
- In case of use of the glycol, the maximum water flow is reduced.

Low-pressure pump

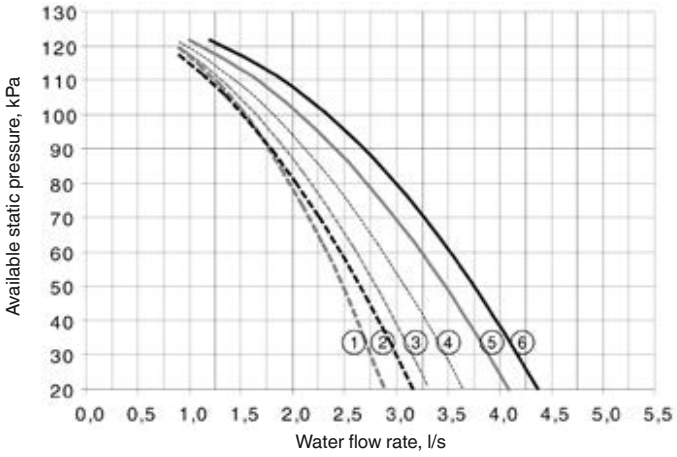

Legend

1. 30RBSY 039
2. 30RBSY 045
3. 30RBSY 050
4. 30RBSY 060
5. 30RBSY 070
6. 30RBSY 080

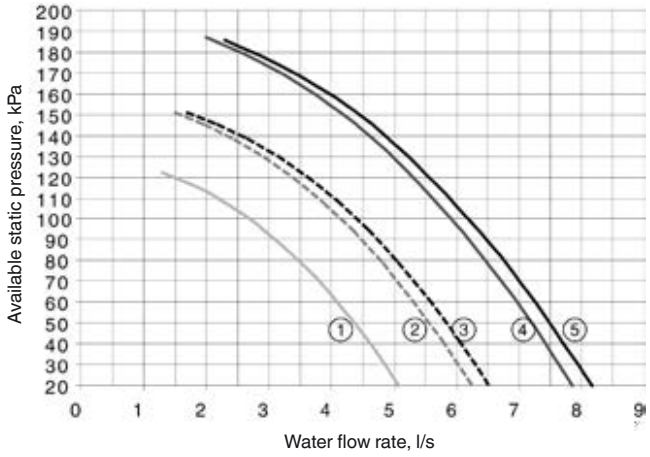

Legend

1. 30RBSY 090
2. 30RBSY 100
3. 30RBSY 120
4. 30RBSY 140
5. 30RBSY 160

High-pressure pump

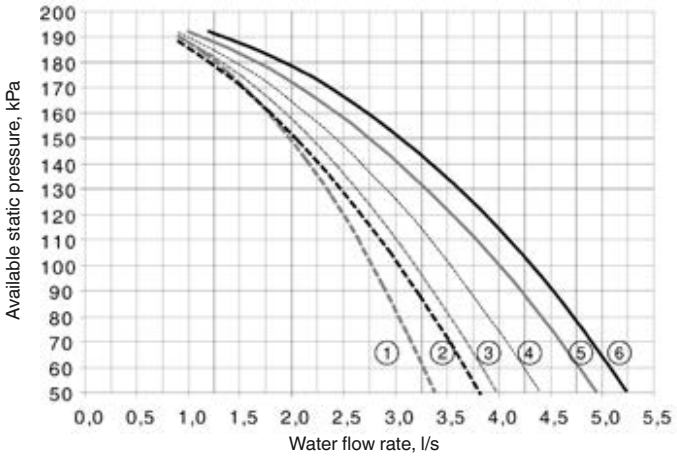

Legend

1. 30RBSY 039
2. 30RBSY 045
3. 30RBSY 050
4. 30RBSY 060
5. 30RBSY 070
6. 30RBSY 080

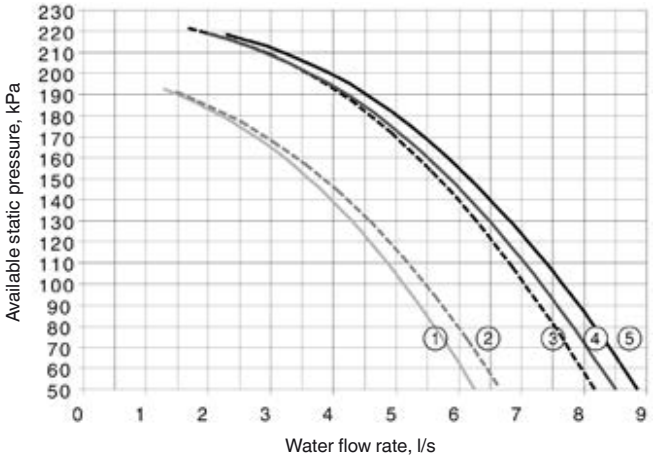

Legend

1. 30RBSY 090
2. 30RBSY 100
3. 30RBSY 120
4. 30RBSY 140
5. 30RBSY 160

Available external static pressure, 30RQSY

Data applicable for:
- Fresh water 20 °C
- In case of use of the glycol, the maximum water flow is reduced.

Low-pressure pump

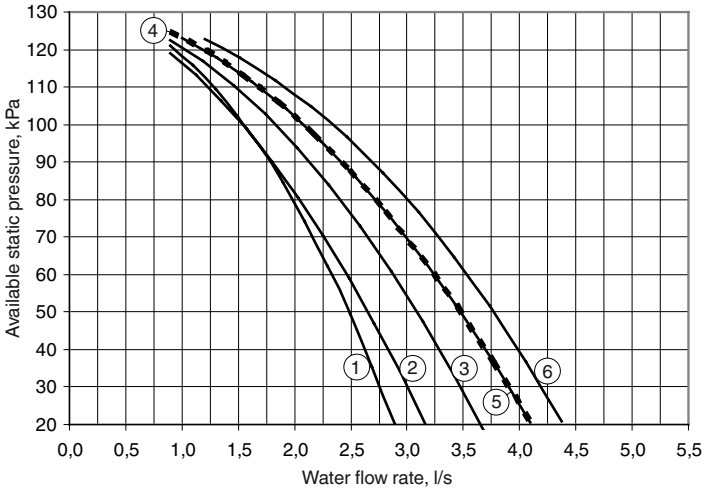

Legend

1. 30RQSY 039
2. 30RQSY 045
3. 30RQSY 050
4. 30RQSY 060
5. 30RQSY 070
6. 30RQSY 078

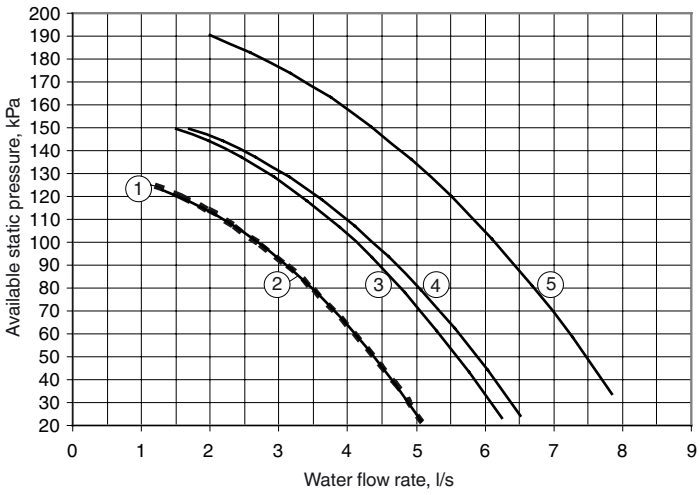

Legend

1. 30RQSY 080
2. 30RQSY 090
3. 30RQSY 100
4. 30RQSY 120
5. 30RQSY 140

High-pressure pump

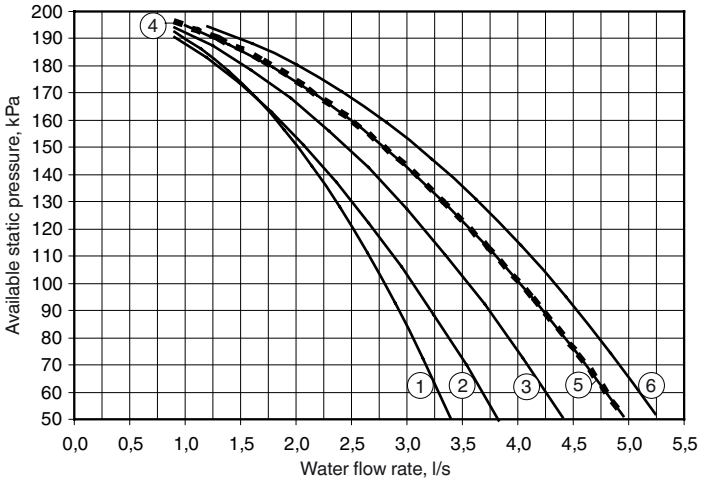

Legend

1. 30RQSY 039
2. 30RQSY 045
3. 30RQSY 050
4. 30RQSY 060
5. 30RQSY 070
6. 30RQSY 078

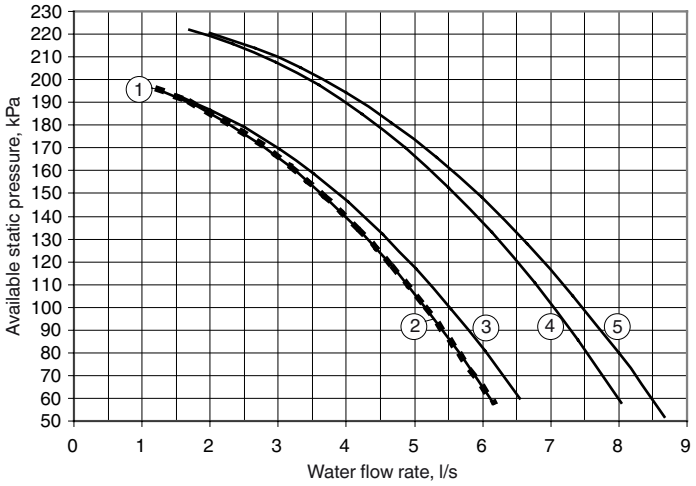

Legend

1. 30RQSY 080
2. 30RQSY 090
3. 30RQSY 100
4. 30RQSY 120
5. 30RQSY 140

Air pressure drop

Selection of a ductable unit

The 30RBSY and 30RQSY ranges are designed for indoor installation in a plant room. For this type of installation the cold or hot air leaving the air-cooled air heat exchangers is discharged by the fans to the outside of the building, using a duct system.

The units are equipped with fans with available pressure, designed to operate with air discharge ducts with maximum pressure drops of 180 Pa or 240 Pa on certain sizes.

To compensate for these pressure drops this range of ductable units equipped with variable-speed fans with a maximum speed of 19 r/s.

In the cooling mode, the full-load or part-load speed is controlled by a patented algorithm that permanently optimises the condensing temperature to ensure the best unit energy efficiency (EER) whatever the operating conditions and pressure drops of the system ductwork.

In the heating mode, the full-load or part-load speed of each circuit is fixed and at the configured maximum (range configurable from 12 r/s to 19 r/s) based on the constraints and characteristics of the installation site. The maximum configured speed applies to both the heating and cooling mode.

Each refrigerant circuit (A and B) must have a separate ducting system to prevent any air recycling between the air heat exchangers of the different refrigerant circuits.

To collect the defrost water from the coils in the heating mode, 30RQSY units must be installed on an appropriate surface to permit efficient condensate drainage and evacuation and to prevent any risk of flooding at the site. A condensate collection pan is available for 30RBSY 039-080 and 30RQSY 039-078 units.

Selection based on the pressure drop

The cooling and heating capacities are given for an available pressure of 160 Pa and for a unit without filter.

To calculate the performances at other pressure drops please use the correction factors below.

Cooling mode

30RBSY 039-060/30RBSY 090-120 and 30RQSY 039-050/30RQSY 080-120

Duct pressure drop	Fan speed, r/s	Power input coefficient	Cooling capacity coefficient
0	12.00	0.943	1.019
50	13.33	0.962	1.012
100	14.66	0.980	1.006
130	15.46	0.990	1.003
160	16.26	1.000	1.000
200	17.31	1.012	0.998
240	18.36	1.023	0.996

30RBSY 070-080/30RBSY 140-160 and 30RQSY 060-078/30RQSY 140-160

Duct pressure drop	Fan speed, r/s	Power input coefficient	Cooling capacity coefficient
0	15.83	0.929	1.018
50	16.81	0.944	1.016
100	17.78	0.964	1.014
130	18.36	0.978	1.011
160	18.36	1.000	1.000
180	18.36	1.019	0.991

Heating mode

30RQSY 039-050/30RQSY 080-120

Duct pressure drop	Fan speed, r/s	Power input coefficient	Heating capacity coefficient
0	18.36	0.990	1.016
50	18.36	0.990	1.012
100	18.36	0.990	1.009
130	18.36	1.000	1.005
160	18.36	1.000	1.000
200	18.36	1.000	0.994
240	18.36	1.010	0.981

30RQSY 060-078/30RQSY 140-160

Duct pressure drop	Fan speed, r/s	Power input coefficient	Heating capacity coefficient
0	18.36	1.000	1.026
50	18.36	1.000	1.020
100	18.36	1.000	1.011
130	18.36	1.000	1.007
160	18.36	1.000	1.000
180	18.36	1.001	0.993

Note:
Pressure drop, clean filter = 6 Pa
Pressure drop, dirty filter = 12 Pa

Dimensions/clearances, 30RBSY/30RQSY

30RBSY 039-050 and 070 and 30RQSY 039-045, units with and without hydronic module, without filter frame

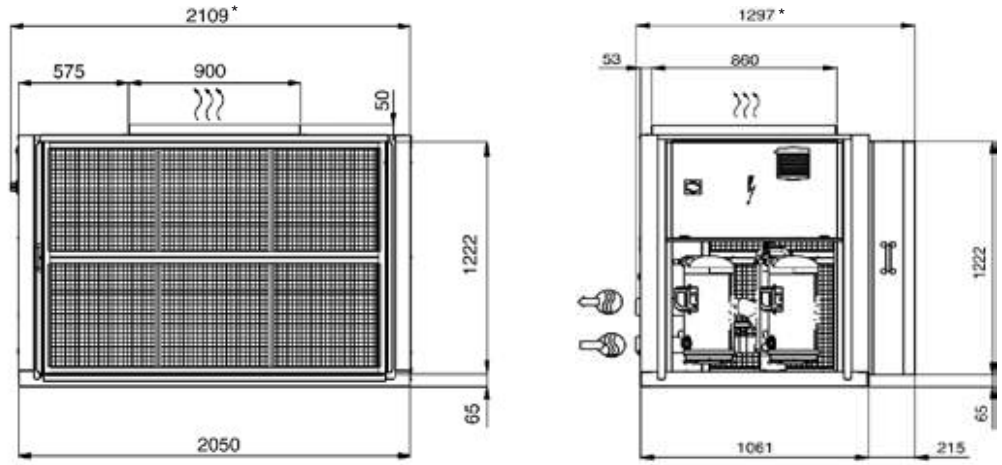

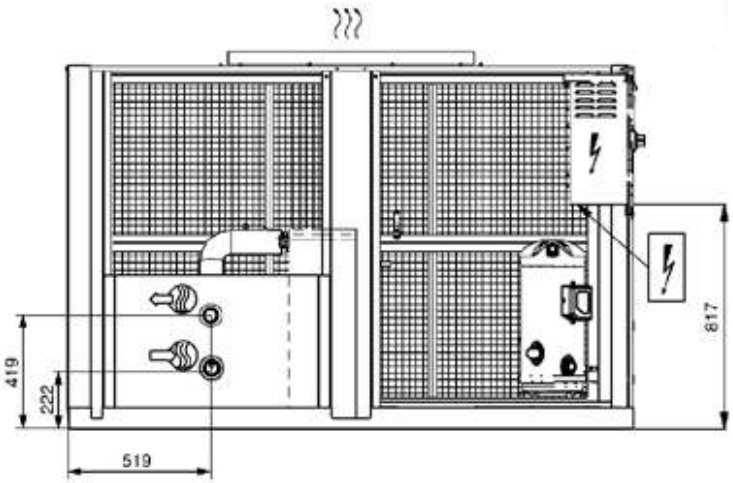

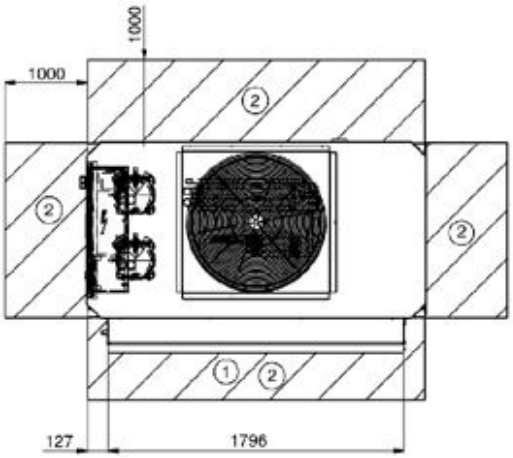

Legend:
All dimensions are given in mm

- Control box
- Water inlet
- Water outlet
- ① Required clearances for air entry
- ② Recommended space for maintenance
- Air outlet, do not obstruct
- Power supply inlet

* Overall dimensions

Notes:

A Non-certified drawings.
Refer to the certified dimensional drawings supplied with the unit or available on request, when designing an installation. For the location of fixing points, weight distribution and coordinates of the centre of gravity refer to the certified dimensional drawings.

B Provide a gutter around the unit to collect the condensate water or install the accessory condensate collection pan (30RBSY 039-080/30RQSY 039-078).

C The unit must be installed level (less than 2 mm per metre deviation in both axes).

D Units 30RBSY 039-080 and 30RQSY 039-078 are equipped with a sleeve on the air heat exchanger side to allow connection of a suction air frame.

Dimensions/clearances, 30RBSY/30RQSY

30RBSY 039-050 and 070 and 30RQSY 039-045, option 23B, units with and without hydronic module, with filter frame

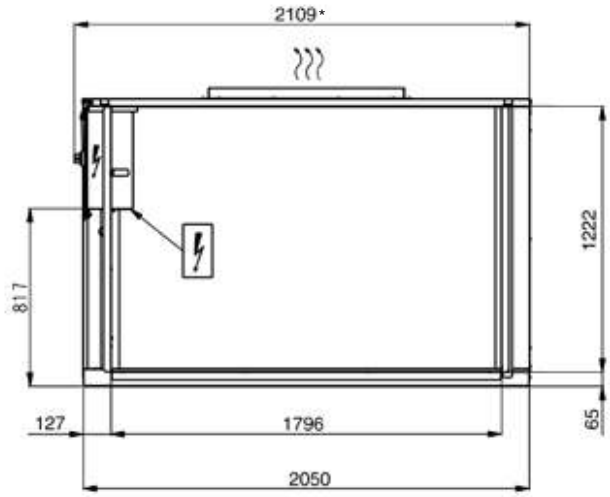

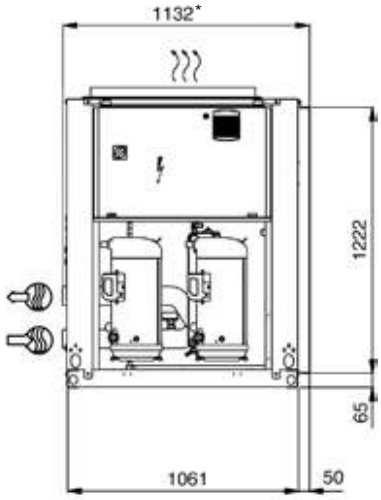

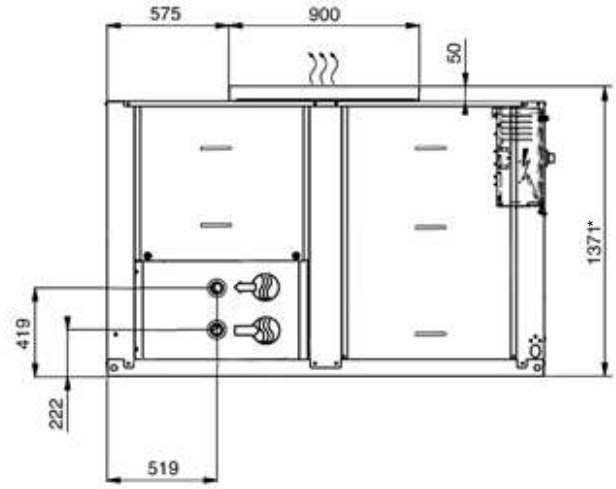

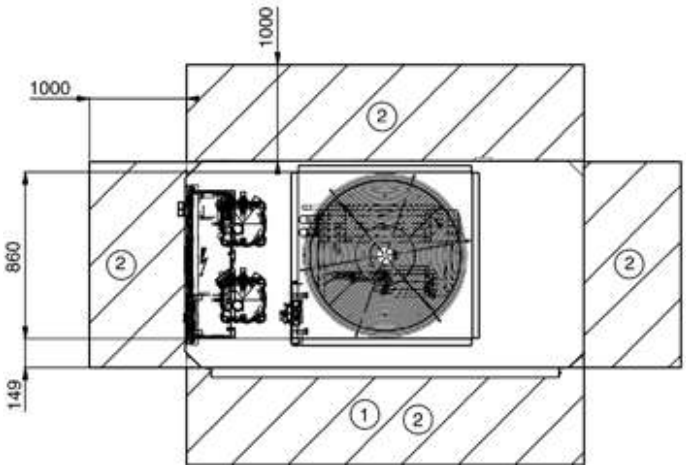

Legend:
All dimensions are given in mm

- Control box
- Water inlet
- Water outlet
- ① Required clearances for air entry
- ② Recommended space for maintenance
- Air outlet, do not obstruct
- Power supply inlet

* Overall dimensions

Notes:

A Non-certified drawings.
Refer to the certified dimensional drawings supplied with the unit or available on request, when designing an installation. For the location of fixing points, weight distribution and coordinates of the centre of gravity refer to the certified dimensional drawings.

B Provide a gutter around the unit to collect the condensate water or install the accessory condensate collection pan (30RBSY 039-080/30RQSY 039-078).

C The unit must be installed level (less than 2 mm per metre deviation in both axes).

D Units 30RBSY 039-080 and 30RQSY 039-078 are equipped with a sleeve on the air heat exchanger side to allow connection of a suction air frame.

Dimensions/clearances, 30RBSY/30RQSY

30RBSY 060 and 080 and 30RQSY 050-078, units with and without hydronic module, without filter frame

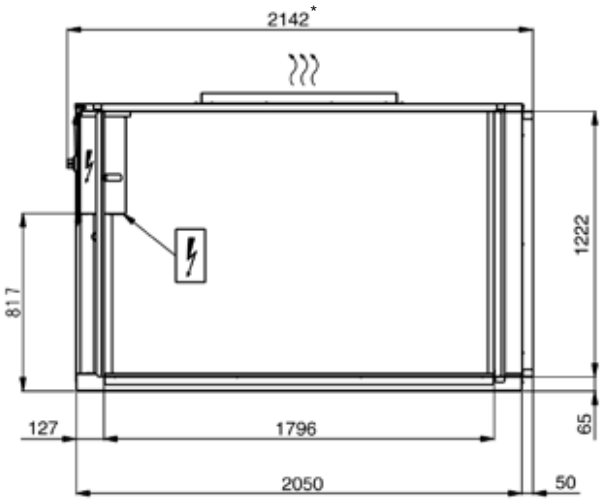

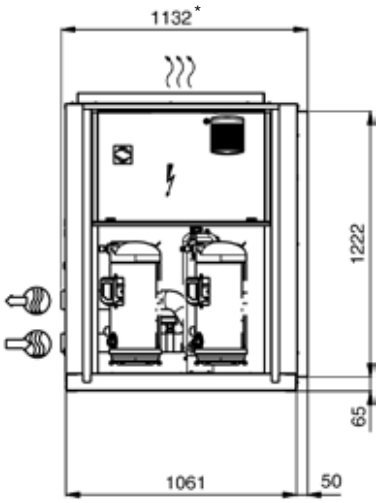

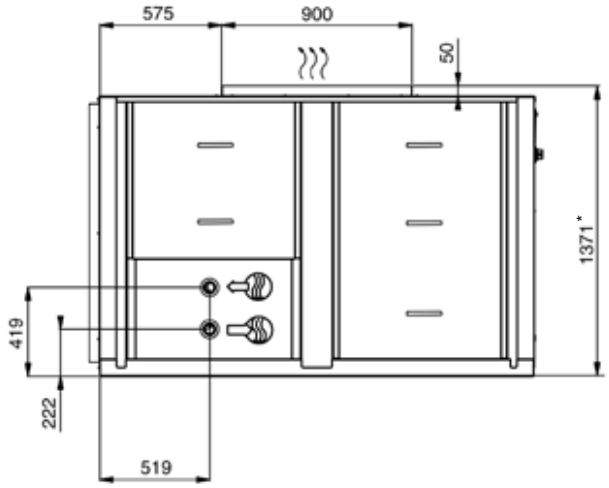

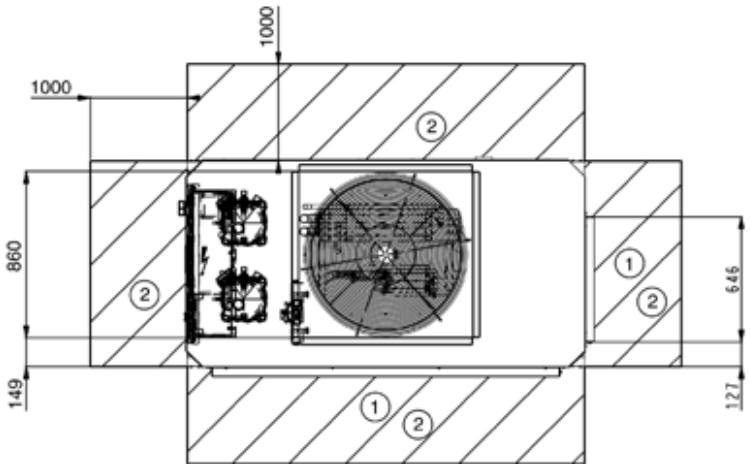

Legend:
All dimensions are given in mm

- Control box
- Water inlet
- Water outlet
- ① Required clearances for air entry
- ② Recommended space for maintenance
- Air outlet, do not obstruct
- Power supply inlet

* Overall dimensions

Notes:

A Non-certified drawings.
Refer to the certified dimensional drawings supplied with the unit or available on request, when designing an installation. For the location of fixing points, weight distribution and coordinates of the centre of gravity refer to the certified dimensional drawings.

B Provide a gutter around the unit to collect the condensate water or install the accessory condensate collection pan (30RBSY 039-080/30RQSY 039-078).

C The unit must be installed level (less than 2 mm per metre deviation in both axes).

D Units 30RBSY 039-080 and 30RQSY 039-078 are equipped with a sleeve on the air heat exchanger side to allow connection of a suction air frame.

Dimensions/clearances, 30RBSY/30RQSY

30RBSY 060 and 080 and 30RQSY 050-078, option 23B, units with and without hydronic module, with filter frame

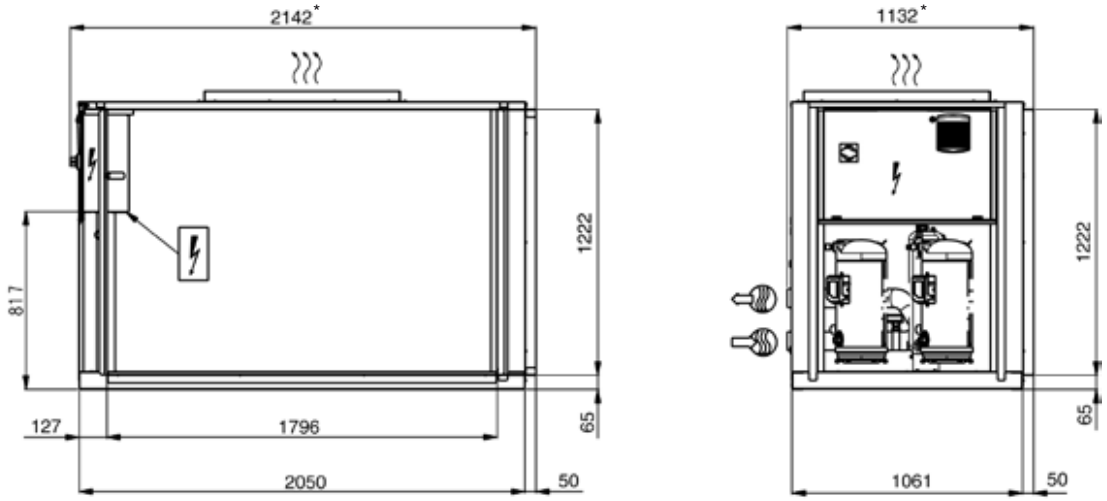

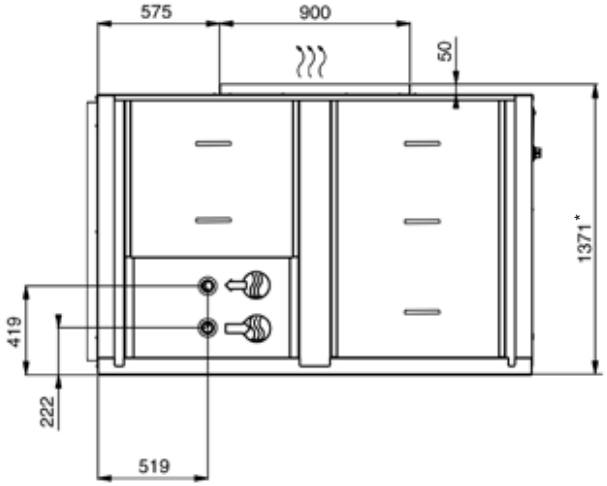

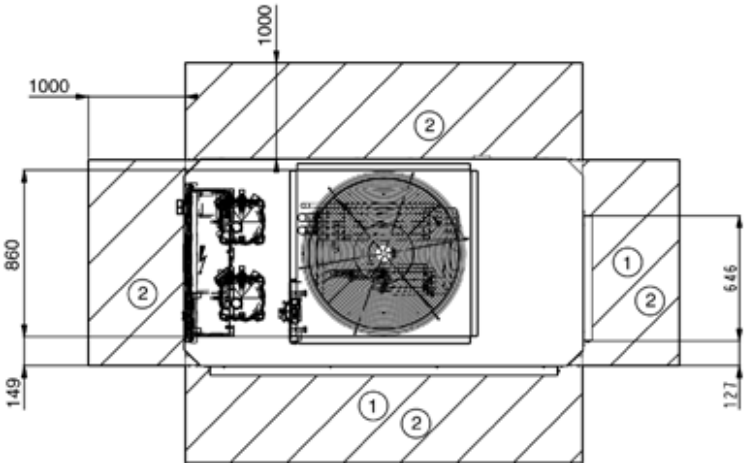

Legend:
All dimensions are given in mm

- Control box
- Water inlet
- Water outlet
- ① Required clearances for air entry
- ② Recommended space for maintenance
- Air outlet, do not obstruct
- Power supply inlet

* Overall dimensions

Notes:

A Non-certified drawings.
Refer to the certified dimensional drawings supplied with the unit or available on request, when designing an installation. For the location of fixing points, weight distribution and coordinates of the centre of gravity refer to the certified dimensional drawings.

B Provide a gutter around the unit to collect the condensate water or install the accessory condensate collection pan (30RBSY 039-080/30RQSY 039-078).

C The unit must be installed level (less than 2 mm per metre deviation in both axes).

D Units 30RBSY 039-080 and 30RQSY 039-078 are equipped with a sleeve on the air heat exchanger side to allow connection of a suction air frame.

Dimensions/clearances, 30RBSY/30RQSY

30RBSY 090-120 and 30RQSY 080-120, units with and without hydronic module

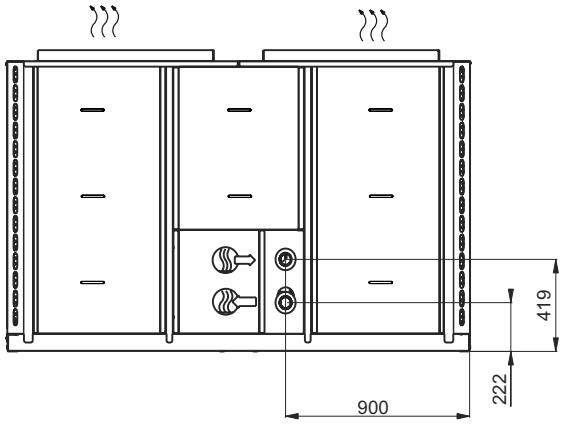

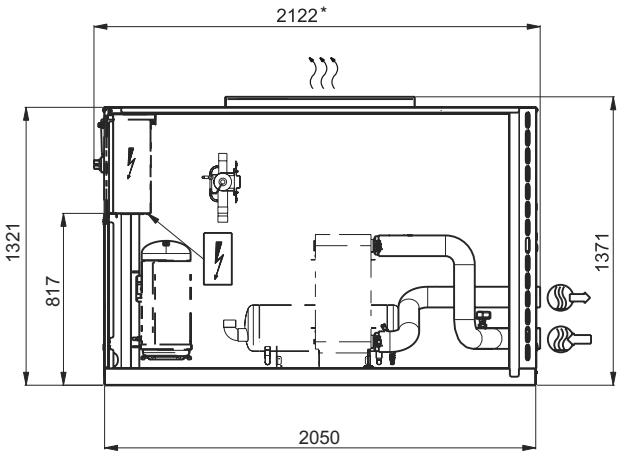

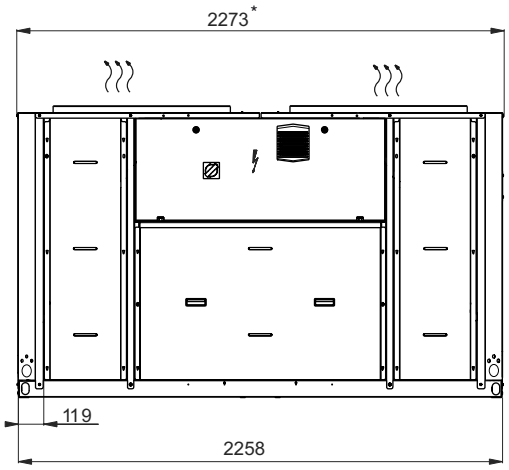

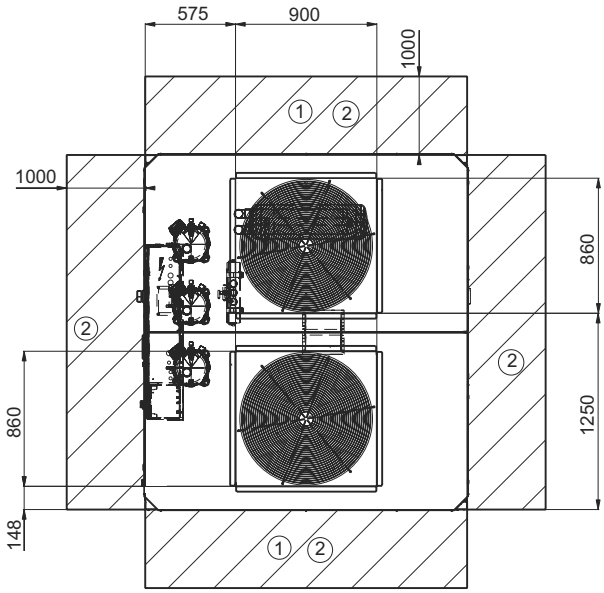

Legend:
All dimensions are given in mm

- Control box
- Water inlet
- Water outlet
- ① Required clearances for air entry
- ② Recommended space for maintenance
- Air outlet, do not obstruct
- Power supply inlet

* Overall dimensions

Notes:

A Non-certified drawings.
Refer to the certified dimensional drawings supplied with the unit or available on request, when designing an installation. For the location of fixing points, weight distribution and coordinates of the centre of gravity refer to the certified dimensional drawings.

B The unit must be installed level (less than 2 mm per metre deviation in both axes).

Dimensions/clearances, 30RBSY/30RQSY

30RBSY 140-160 and 30RQSY 140-160, units with and without hydronic module

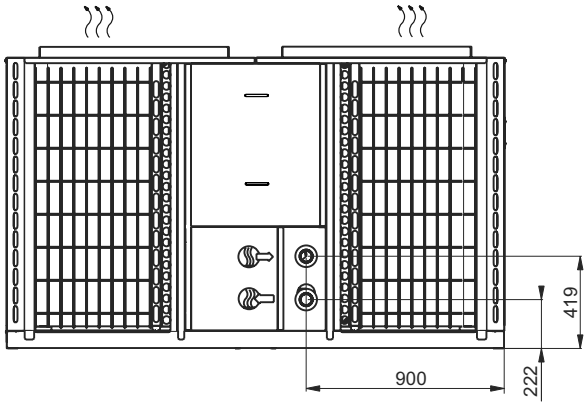

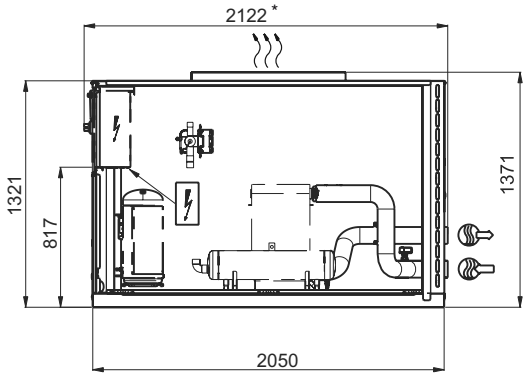

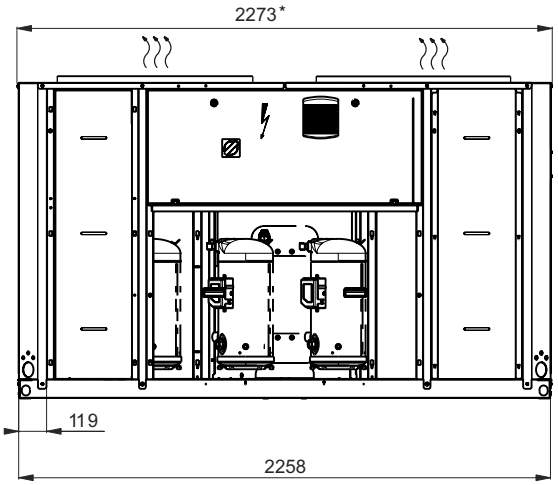

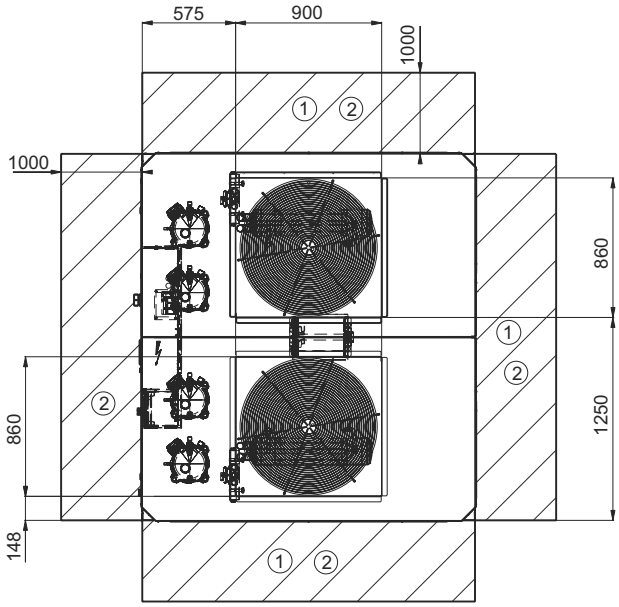

Legend:
All dimensions are given in mm

- Control box
- Water inlet
- Water outlet
- (1) Required clearances for air entry
- (2) Recommended space for maintenance
- Air outlet, do not obstruct
- Power supply inlet

* Overall dimensions

Notes:

A Non-certified drawings.
Refer to the certified dimensional drawings supplied with the unit or available on request, when designing an installation. For the location of fixing points, weight distribution and coordinates of the centre of gravity refer to the certified dimensional drawings.

B The unit must be installed level (less than 2 mm per metre deviation in both axes).

Dimensions/clearances for 30RBSY/RQSY units with option 49

Position of the desuperheater inlets and outlets

30RBSY/RQSY 039-080

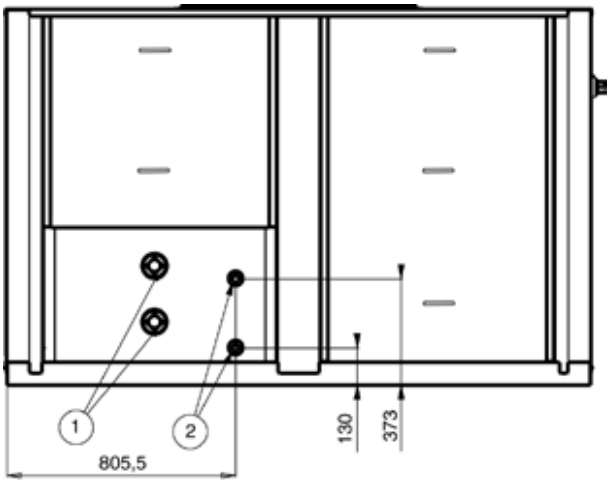

30RBSY/RQSY 090-120

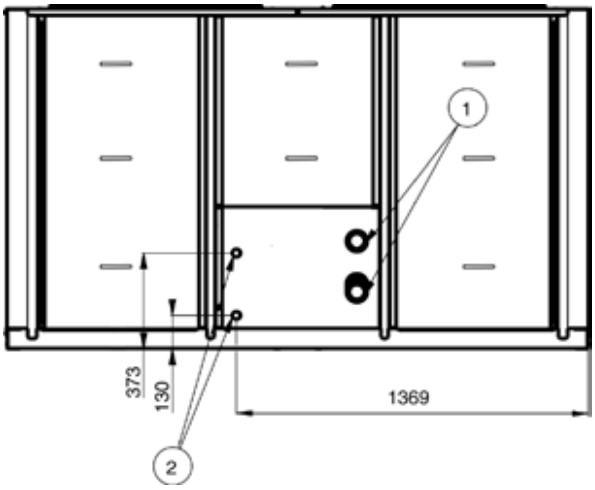

30RBSY/RQSY 140-160

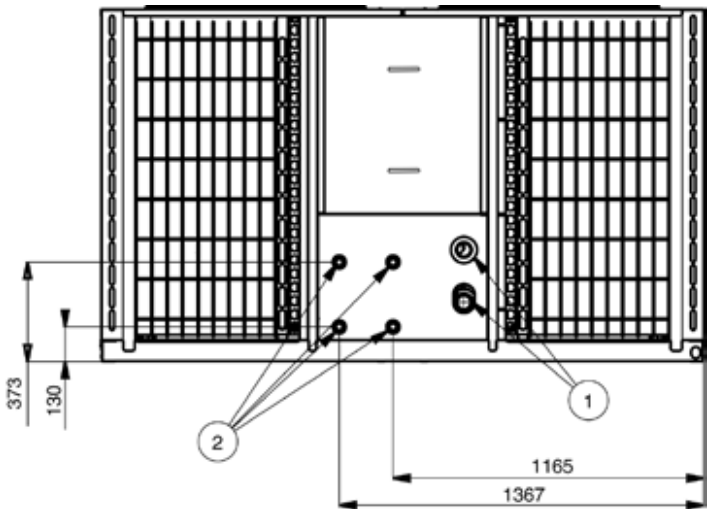

① Unit water inlet and outlet

② Water inlet and outlet, unit with option 49

ISO9001 • ISO14001
Quality and Environment Management Systems Approval

Order No.: 13471, 02.2016. Supersedes order No.: 13471, 06.2015.
Manufacturer reserves the right to change any product specifications without notice.

Manufactured by: Carrier SCS, Montluel, France.
Printed in the European Union.