30RB 162-262 “B”
30RB 302-802

Air-Cooled Liquid Chillers

Nominal cooling capacity 163-760 kW

50 Hz

PRO-DIALOG

AQUASNAP™

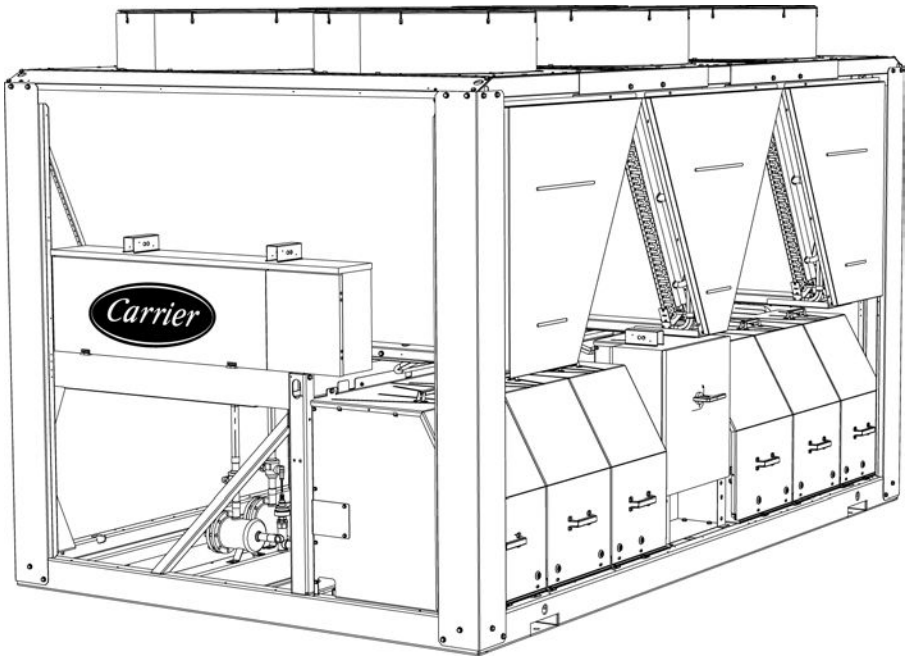

Unit with low-noise option shown

Installation, operation and maintenance instructions

ISO9001·ISO14001

Quality and Environment Management Systems Approval

CONTENTS

1 - INTRODUCTION 4
1.1 - Check equipment received 4
1.2 - Installation safety considerations 4
1.3 - Equipment and components under pressure 5
1.4 - Maintenance safety considerations 5
1.5 - Repair safety considerations 6

2 - MOVING AND SITING THE UNIT 7
2.1 - Moving 7
2.2 - Siting the unit 7
2.3 - Checks before system start-up 8

3 - DIMENSIONS, CLEARANCES 9
3.1 - 30RB 162-262 “B”, standard units 9
3.2 - 30RB 162-262 “B”, option 280 10
3.3 - 30RB 302-522 11
3.4 - 30RB 602-802 12
3.5 - Multiple chiller installation 12

4 - PHYSICAL DATA - 30RB 13
4.1 - 30RB 162-262 "B" standard units 13
4.2 - 30RB 162-262 "B" units with option 280 and 30RB 302-802 units 14

5 - ELECTRICAL DATA - 30RB 15
5.1 - 162-262 “B” standard (units and units with option 280) and 30RB 302-802 units 15
5.2 - Short-circuit stability current 15
5.3 - Electrical data, hydronic module (sizes 162 to 522) 16
5.4 - Compressor usage and electrical data 17
5.5 - Electric power user reserve 17

6 - APPLICATION DATA 18
6.1 - Unit operating range 18
6.2 - Minimum chilled water flow (units without hydronic module) 18
6.3 - Maximum chilled water flow (units without hydronic module) 19
6.4 - Variable flow evaporator 19
6.5 - Minimum system water volume 19
6.6 - Maximum system water volume 19
6.7 - Evaporator flow rate 19
6.8 - Pressure drop curves for the evaporator and standard entering/leaving water piping 20

7 - ELECTRICAL CONNECTION 21
7.1 - Power supply 21
7.2 - Voltage phase imbalance (%) 21
7.3 - Power connection/disconnect switch 21
7.4 - Recommended wire sections 21
7.5 - Field control wiring 22
7.6 - Power supply 23

8 - WATER CONNECTIONS 23
8.1 - Operating precautions and recommendations 23
8.2 - Hydronic connections 24
8.3 - Flow control 26
8.4 - Frost protection 26
8.5 - Operation of two units in master/slave mode 27

9 - NOMINAL SYSTEM WATER FLOW CONTROL 28
9.1 - Water flow control procedure 28
9.2 - Pump pressure/flow rate curves 29
9.3 - Available static system pressure 31

10 - MAJOR SYSTEM COMPONENTS 35
10.1 - Compressors 35
10.2 - Lubricant 35
10.3 - Condensers 35
10.4 - Fans 35
10.5 - Electronic expansion valve (EXV) 35
10.6 - Moisture indicator 35
10.7 - Filter drier 35
10.8 - Evaporator 35
10.9 - Refrigerant 36
10.10 - High-pressure safety switch 36
10.11 - Fan arrangement 37
10.12 - Fan stages 37

11 - OPTIONS AND ACCESSORIES 38
11.1 - Free-cooling system (option 118A) 38
11.2 - Total heat reclaim (option 50) 38
11.3 - Partial heat reclaim using desuperheaters (option 49) 43
11.4 - Units with fans with available pressure for indoor installation (option 12) 49
11.5 - Brine option 56
11.6 - Unit storage above 48°C (option 241) 57
11.7 - Other options and accessories 58

12 - STANDARD MAINTENANCE 59
12.1 - Level 1 maintenance (see note opposite) 59
12.2 - Level 2 maintenance (see note opposite) 59
12.3 - Level 3 (or higher) maintenance (see note below) 59
12.4 - Tightening torques for the main electrical connections 60
12.5 - Tightening torques for the main bolts and screws 60
12.6 - Condenser coil 60
12.7 - Evaporator maintenance 61
12.8 - Characteristics of R-410A 61

13 - START-UP CHECKLIST FOR 30RB LIQUID CHILLERS (USE FOR JOB FILE) 62

The cover photograph is for illustrative purposes only and is not part of any offer for sale or contract.

1 - INTRODUCTION

Prior to the initial start-up of the 30RB units, the people involved should be thoroughly familiar with these instructions and with the technical characteristics of the installation site.

30RB chillers are designed to provide a very high safety and reliability level making installation, start-up, operation and maintenance easier and more secure. They will provide safe and reliable service if used within their application range.

The procedures in this manual are arranged in the sequence required for machine installation, start-up, operation and maintenance.

Be sure you understand and follow the procedures and safety precautions contained in the instructions supplied with the machine, as well as those listed in this guide, such as: protective clothing such as gloves, safety glasses, safety shoes and appropriate tools, and suitable qualifications (electrical, air conditioning, local legislation).

To find out, if these products comply with European directives (machine safety, low voltage, electromagnetic compatibility, equipment under pressure etc.) check the declarations of conformity for these products.

1.1 - Check equipment received

- Check that the unit has not been damaged during transport and that no parts are missing. If the unit has been damaged or the shipment is incomplete, send a claim to the shipping company.
- Compare the name plate data with the order. The name plate is attached in two places to the unit:
  - on one of the unit sides on the outside,
  - on the control box door on the inside.
- The unit name plate must include the following information:
  - Model number - size
  - CE marking
  - Serial number
  - Year of manufacture and pressure and leak tightness test date
  - Refrigerant used
  - Refrigerant charge per circuit
  - PS: Min./max. allowable pressure (high and low pressure side)
  - TS: Min./max. allowable temperature (high and low pressure side)
  - Pressure switch cut-out pressure
  - Unit leak test pressure
  - Voltage, frequency, number of phases
  - Maximum current drawn
  - Maximum power input
  - Unit net weight
- Confirm that all accessories ordered for on-site installation have been delivered, are complete and undamaged.

The unit must be checked periodically, if necessary removing the insulation (thermal, acoustic), during its whole operating life to ensure that no shocks (handling accessories, tools etc.) have damaged it. If necessary, the damaged parts must be repaired or replaced. See also chapter "Maintenance".

1.2 - Installation safety considerations

After the unit has been received, and before it is started up, it must be inspected for damage. Check that the refrigerant circuits are intact, especially that no components or pipes have shifted or been damaged (e.g. following a shock). If in doubt, carry out a leak tightness check. If damage is detected upon receipt, immediately file a claim with the shipping company.

Do not remove the skid or the packaging until the unit is in its final position. These units can be moved with a fork lift truck, as long as the forks are positioned in the right place and direction on the unit.

The units can also be lifted with slings, using only the designated lifting points marked on the unit (labels on the chassis and a label with all unit handling instructions are attached to the unit).

Use slings with the correct capacity, and always follow the lifting instructions on the certified drawings supplied for the unit.

Safety is only guaranteed, if these instructions are carefully followed. If this is not the case, there is a risk of material deterioration and injuries to personnel.

DO NOT COVER ANY PROTECTION DEVICES.

This applies to fuse plugs and safety valves (if used) in the refrigerant or heat transfer medium circuits. Check if the original protection plugs are still present at the valve outlets. These plugs are generally made of plastic and should not be used. If they are still present, please remove them. Install devices at the valve outlets or drain piping that prevent the penetration of foreign bodies (dust, building debris, etc.) and atmospheric agents (water can form rust or ice). These devices, as well as the drain piping, must not impair operation and not lead to a pressure drop that is higher than 10% of the control pressure.

Classification and control
In accordance with the Pressure Equipment Directive and national usage monitoring regulations in the European Union the protection devices for these machines are classified as follows:

	Safety accessory*	Damage limitation accessory** in case of an external fire
Refrigerant side		
High-pressure switch	x	
External relief valve***		x
Rupture disk		x
Fuse plug		x
Heat transfer fluid side		
External relief valve****	x	x

* Classified for protection in normal service situations.
** Classified for protection in abnormal service situations.
*** The instantaneous over-pressure limited to 10% of the operating pressure does not apply to this abnormal service situation. The control pressure can be higher than the service pressure. In this case either the design temperature or the high-pressure switch ensures that the service pressure is not exceeded in normal service situations.
**** The classification of these safety valves must be made by the personnel that completes the whole hydronic installation.

Do not remove these valves and fuses, even if the fire risk is under control for a particular installation. There is no guarantee that the accessories are re-installed if the installation is changed or for transport with a gas charge.

All factory-installed safety valves are lead-sealed to prevent any calibration change.

The external safety valves must always be connected to drain pipes for units installed in a closed room. Refer to the installation regulations, for example those of European standard EN 378 and EN 13136.

These pipes must be installed in a way that ensures that people and property are not exposed to refrigerant leaks. As the fluids can be diffused in the air, ensure that the outlet is far away from any building air intake, or that they are discharged in a quantity that is appropriate for a suitably absorbing environment.

Safety valves must be checked periodically. See paragraph "Repair safety considerations".

Provide a drain in the drain pipe, close to each safety valve, to avoid an accumulation of condensate or rain water.

All precautions concerning handling of refrigerant must be observed in accordance with local regulations.

1.3 - Equipment and components under pressure

These products incorporate equipment or components under pressure, manufactured by Carrier or other manufacturers. We recommend that you consult your appropriate national trade association or the owner of the equipment or components under pressure (declaration, re-qualification, retesting, etc.). The characteristics of this equipment/these components are given on the nameplate or in the required documentation, supplied with the products.

These units comply with the European Pressure Equipment Directive.

1.4 - Maintenance safety considerations

Engineers working on the electric or refrigeration components must be authorized, trained and fully qualified to do so.

All refrigerant circuit work must be carried out by a trained person, fully qualified to work on these units. He must have been trained and be familiar with the equipment and the installation. All welding operations must be carried out by qualified specialists.

Aquasnap Puron units use high-pressure R-410A refrigerant (the unit operating pressure is above 40 bar, the pressure at 35°C air temperature is 50% higher than for R-22). Special equipment must be used when working on the refrigerant circuit (pressure gauge, charge transfer, etc.).

Any manipulation (opening or closing) of a shut-off valve must be carried out by a qualified and authorised engineer, observing applicable standards (e.g. during draining operations). The unit must be switched off during all operations.

NOTE: The unit must never be left shut down with the liquid line valve closed, as liquid refrigerant can be trapped between this valve and the expansion device and lead to the risk of a pressure increase. This valve is situated on the liquid line before the filter drier box.

During any handling, maintenance and service operations the engineers working on the unit must be equipped with safety gloves, glasses, shoes and protective clothing.

Never work on a unit that is still energized. Never work on any of the electrical components, until the general power supply to the unit has been cut.

If any maintenance operations are carried out on the unit, lock the power supply circuit in the open position ahead of the machine.

If the work is interrupted, always ensure that all circuits are still deenergised before resuming the work.

ATTENTION: Even if the unit has been switched off, the power circuit remains energised, unless the unit or circuit disconnect switch is open. Refer to the wiring diagram for further details. Attach appropriate safety labels.

It is recommended to install an indicating device to show if part of the refrigerant has leaked from the valve. The presence of oil at the outlet orifice is a useful indicator that refrigerant has leaked. Keep this orifice clean to ensure that any leaks are obvious. The calibration of a valve that has leaked is generally lower than its original calibration. The new calibration may affect the operating range. To avoid nuisance tripping or leaks, replace or re-calibrate the valve.

OPERATING CHECKS:

- ***IMPORTANT INFORMATION REGARDING THE REFRIGERANT USED:***
  This product contains fluorinated greenhouse gas covered by the Kyoto protocol.
  Refrigerant type: R410A
  Global Warming Potential (GWP): 1975
  Periodic inspections for refrigerant leaks may be required depending on European or local legislation. Please contact your local dealer for more information.
- ***During the life-time of the system, inspection and tests must be carried out in accordance with national regulations.***

Protection device checks:

- ***If no national regulations exist, check the protection devices on site in accordance with standard EN378: once a year for the high-pressure switches, every five years for external safety valves.***
- ***Check manual "30RB/RQ Pro-Dialog Plus control" for a detailed explanation of the high-pressure switch test method.***

If the machine operates in a corrosive environment, inspect the protection devices more frequently.

Regularly carry out leak tests and immediately repair any leaks.

Ensure regularly that the vibration levels remain acceptable and close to those at the initial unit start-up.

Before opening a refrigerant circuit, purge and consult the pressure gauges.

Change the refrigerant after an equipment failure, following a procedure such as the one described in NF E29-795 or carry out a refrigerant analysis in a specialist laboratory.

If the refrigerant circuit remains open for longer than a day after an intervention (such as a component replacement), the openings must be plugged and the circuit must be charged with nitrogen (inertia principle). The objective is to prevent penetration of atmospheric humidity and the resulting corrosion on the internal walls and on non-protected steel surfaces.

1.5 - Repair safety considerations

All installation parts must be maintained by the personnel in charge, in order to avoid deterioration and injury. Faults and leaks must be repaired immediately. The authorised technician must have the responsibility to repair the fault immediately. After each repair of the unit, check the operation of the protection devices and create a report of the parameter operation at 100%.

Comply with the regulations and recommendations in unit and HVAC installation safety standards, such as: EN 378, ISO 5149, etc.

Never use air or a gas containing oxygen during leak tests to purge lines or to pressurise a machine. Pressurised air mixtures or gases containing oxygen can be the cause of an explosion. Oxygen reacts violently with oil and grease.

Only use dry nitrogen for leak tests, possibly with an appropriate tracer gas.

If the recommendations above are not observed, this can have serious or even fatal consequences and damage the installation.

Never exceed the specified maximum operating pressures. Verify the allowable maximum high- and low-side test pressures by checking the instructions in this manual and the pressures given on the unit name plate.

Do not unweld or flamecut the refrigerant lines or any refrigerant circuit component until all refrigerant (liquid and vapour) as well as the oil have been removed from chiller. Traces of vapour should be displaced with dry nitrogen. Refrigerant in contact with an open flame produces toxic gases.

The necessary protection equipment must be available, and appropriate fire extinguishers for the system and the refrigerant type used must be within easy reach.

Do not siphon refrigerant.

Avoid spilling liquid refrigerant on skin or splashing it into the eyes. Use safety goggles and safety gloves. Wash any spills from the skin with soap and water. If liquid refrigerant enters the eyes, immediately and abundantly flush the eyes with water and consult a doctor. Never apply an open flame or live steam to a refrigerant container. Dangerous overpressure can result.

During refrigerant removal and storage operations follow applicable regulations. These regulations, permitting conditioning and recovery of halogenated hydrocarbons under optimum quality conditions for the products and optimum safety conditions for people, property and the environment are described in standard NF E29-795.

Refer to the certified dimensional drawings for the units.

It is dangerous and illegal to re-use disposable (non-returnable) cylinders or attempt to refill them. When cylinders are empty, evacuate the remaining gas pressure, and move them to a designated place for recovery. Do not incinerate.

Do not attempt to remove refrigerant circuit components or fittings, while the machine is under pressure or while it is running. Be sure pressure is at 0 kPa and that the unit has been shut-down and de-energised before removing components or opening a circuit.

Do not attempt to repair or recondition any safety devices when corrosion or build-up of foreign material (rust, dirt, scale, etc.) is found within the valve body or mechanism. If necessary, replace the device. Do not install safety valves in series or backwards.

ATTENTION: No part of the unit must be used as a walkway, rack or support. Periodically check and repair or if necessary replace any component or piping that shows signs of damage.

Do not step on refrigerant lines. The lines can break under the weight and release refrigerant, causing personal injury.

Do not climb on a machine. Use a platform, or staging to work at higher levels.

Use mechanical lifting equipment (crane, hoist, winch, etc.) to lift or move heavy components. For lighter components, use lifting equipment when there is a risk of slipping or losing your balance.

Use only original replacement parts for any repair or component replacement. Consult the list of replacement parts that corresponds to the specification of the original equipment.

Do not drain water circuits containing industrial brines, without informing the technical service department at the installation site or a competent body first.

Close the entering and leaving water shutoff valves and purge the unit hydronic circuit, before working on the components installed on the circuit (screen filter, pump, water flow switch, etc.).

Periodically inspect all valves, fittings and pipes of the refrigerant and hydronic circuits to ensure that they do not show any corrosion or any signs of leaks.

It is recommended to wear ear defenders, when working near the unit and the unit is in operation.

2 - MOVING AND SITING THE UNIT

2.1 - Moving

See chapter 1.1 "Installation safety considerations".

In some cases vertical supports are added for the transport and handling of the unit. These supports must be removed for access or connection, if required.

IMPORTANT: Follow the disassembly sequence shown in the disassembly instruction notes.

- Unscrew screws marked 1 and 2
- Loosen screw 3, and lift and remove support 4
- Uncrew screw 5 and loosen screw 6.
- Lift and remove support 7.
- Unscrew screw 8 and remove plate 9.

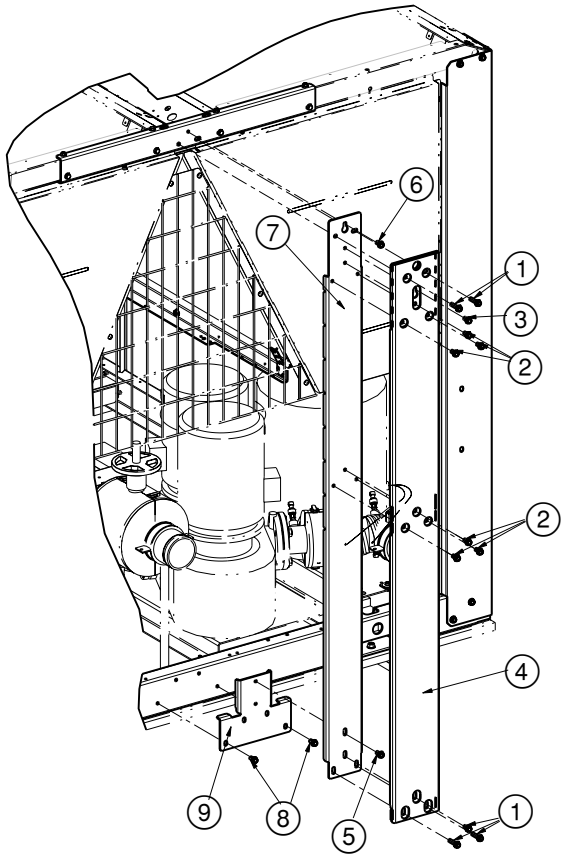

Keep the vertical supports after commissioning the units and re-insert them when the unit is moved.

2.2 - Siting the unit

The machine must be installed in a place that is not accessible to the public or protected against access by non-authorised persons.

In case of extra-high units the machine environment must permit easy access for maintenance operations.

Always refer to the chapter "Dimensions and clearances" to confirm that there is adequate space for all connections and service operations. For the centre of gravity coordinates, the position of the unit mounting holes, and the weight distribution points, refer to the certified dimensional drawing supplied with the unit.

Typical applications of these units do not require earthquake resistance. Earthquake resistance has not been verified.

CAUTION: Only use slings at the designated lifting points which are marked on the unit.

Before siting the unit check that:

- the permitted loading at the site is adequate or that appropriate strenghtening measures have been taken.
- the unit is installed level on an even surface (maximum tolerance is 5 mm in both axes).
- there is adequate space above the unit for air flow and to ensure access to the components (see dimensional drawings).
- the number of support points is adequate and that they are in the right places.
- the location is not subject to flooding.
- for outdoor installations, where heavy snowfall is likely and long periods of sub-zero temperatures are normal, provision has to be made to prevent snow accumulating by raising the unit above the height of drifts normally experienced. Baffles may be necessary to deflect strong winds. They must not restrict air flow into the unit.

CAUTION: Before lifting the unit, check that all casing panels are securely fixed in place. Lift and set down the unit with great care. Tilting and jarring can damage the unit and impair unit operation.

If 30RB units are hoisted with rigging, it is advisable to protect coils against crushing while a unit is being moved. Use struts or a lifting beam to spread the slings above the unit. Do not tilt a unit more than 15°.

WARNING: Never push or lever on any of the enclosure panels of the unit. Only the base of the unit frame is designed to withstand such stresses.

If a unit includes a hydronic module (options 116B, C, F, G, M, N P, Q), the hydronic module and pump piping must be installed in a way that does not submit it to any strain. The hydronic module pipes must be fitted so that the pump does not support the weight of the pipes.

2.3 - Checks before system start-up

Before the start-up of the refrigeration system, the complete installation, including the refrigeration system must be verified against the installation drawings, dimensional drawings, system piping and instrumentation diagrams and the wiring diagrams.

During the installation test national regulations must be followed. If the national regulation does not specify any details, refer to standard EN 378-2 as follows:

External visual installation checks:

- Compare the complete installation with the refrigeration system and power circuit diagrams.
- Check that all components comply with the design specifications.
- Check that all protection documents and equipment provided by the manufacturer (dimensional drawings, P&ID, declarations etc.) to comply with the regulations are present.
- Verify that the environmental safety and protection and devices and arrangements provided by the manufacturer to comply with the regulations are in place.
- Verify that all documents for pressure containers, certificates, name plates, files, instruction manuals provided by the manufacturer to comply with the regulations are present.
- Verify the free passage of access and safety routes.
- Verify the instructions and directives to prevent the deliberate removal of refrigerant gases.
- Verify the installation of connections.
- Verify the supports and fixing elements (materials, routing and connection).
- Verify the quality of welds and other joints.
- Check the protection against mechanical damage.
- Check the protection against heat.
- Check the protection of moving parts.
- Verify the accessibility for maintenance or repair and to check the piping.
- Verify the status of the valves.
- Verify the quality of the thermal insulation.

IMPORTANT: The compressor assemblies are "floating" on rubber blocks between the unit chassis and the sub-assembly chassis (they are not visible). To protect the piping during transport, a flange is installed in the factory.

This flange must be removed on site.

The flange is identified by red rings. A label attached to the compressor sub-assembly warns the installer.

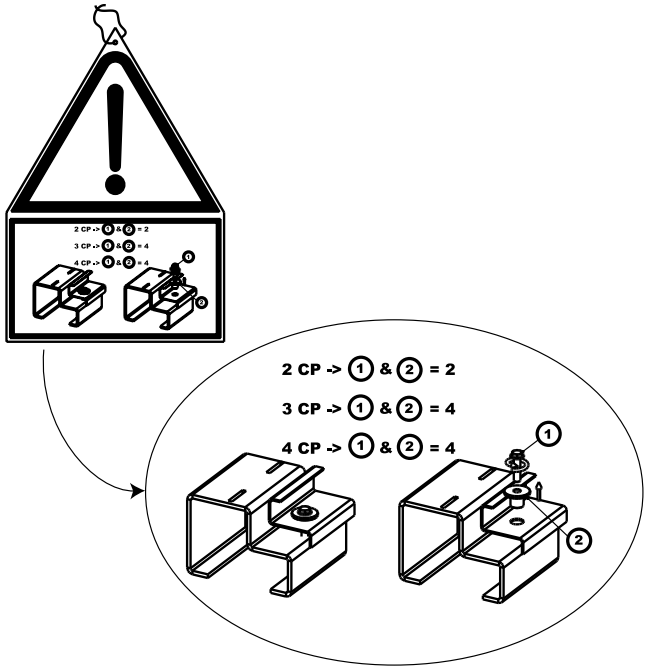

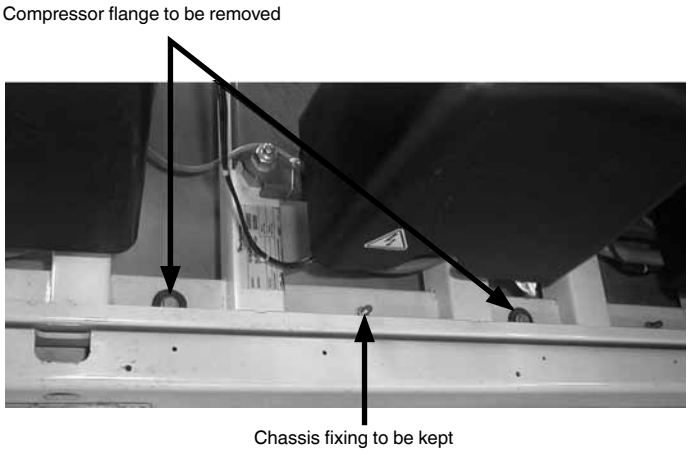

3 - DIMENSIONS, CLEARANCES

For the heat reclaim condenser option, please refer to the relevant chapter.

3.1 - 30RB 162-262 “B”, standard units

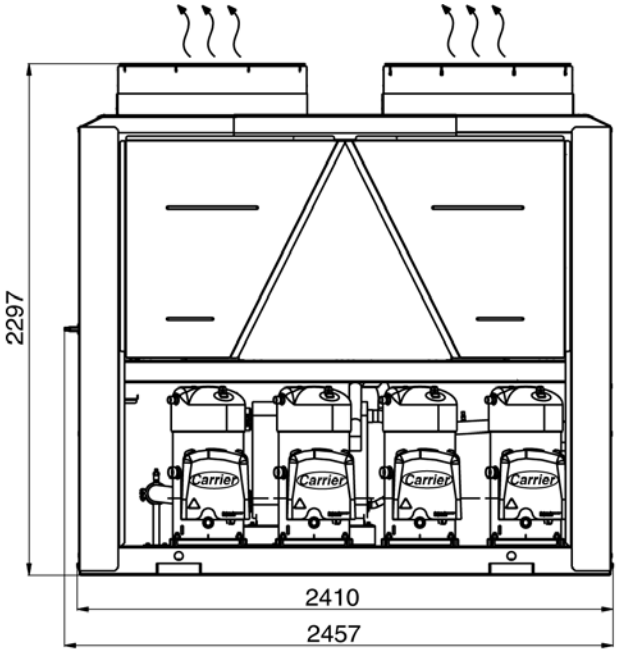

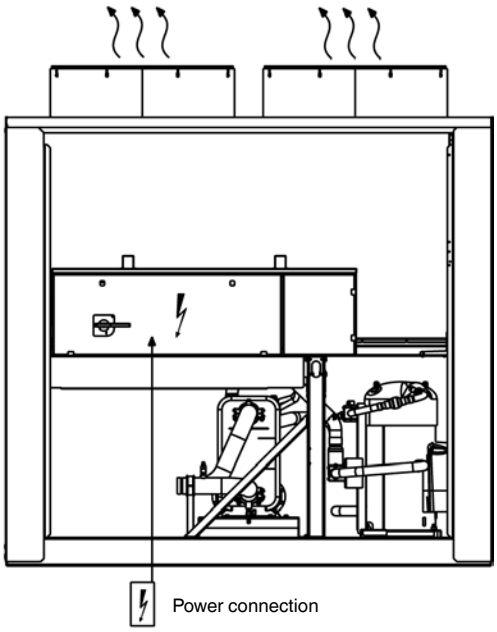

With hydronic module

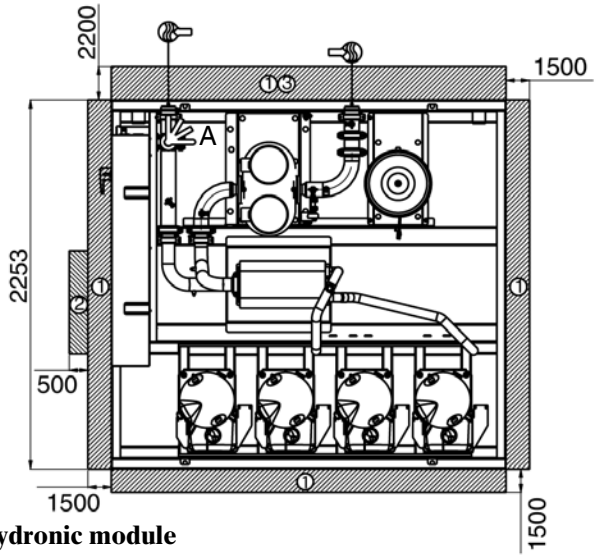

Without hydronic module

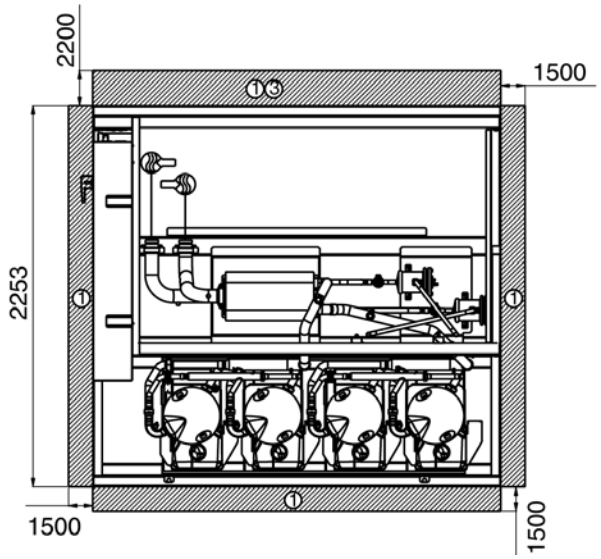

Legend:

All dimensions are in mm.

(1) Clearances required for maintenance and air flow

(2) Clearances recommended for evaporator tube removal

(3) Clearances recommended for heat exchanger removal

Water inlet

Water outlet

Air outlet, do not obstruct

Control box

Options 116	B, C, F, G	M, N, P, Q
A	with valve	without valve

NOTE: Non-contractual drawings.

When designing an installation, refer to the certified dimensional drawings, available on request.

For the positioning of the fixing points, weight distribution points and centre of gravity coordinates please refer to the dimensional drawings.

3.2 - 30RB 162-262 “B”, option 280

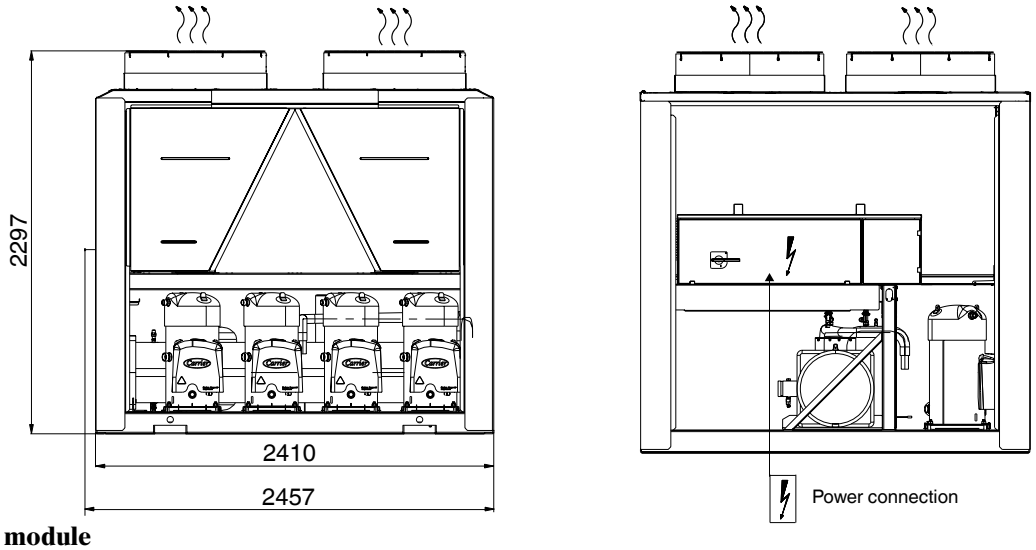

With hydronic module

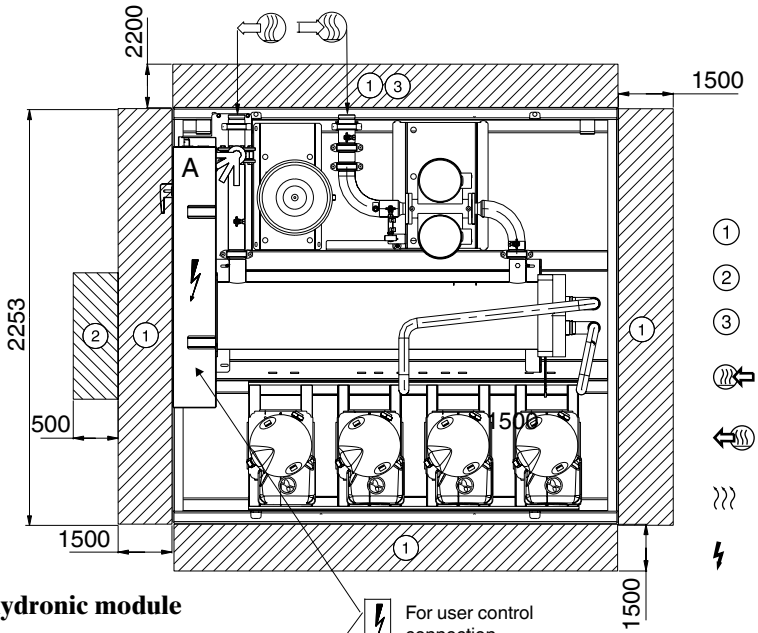

Without hydronic module

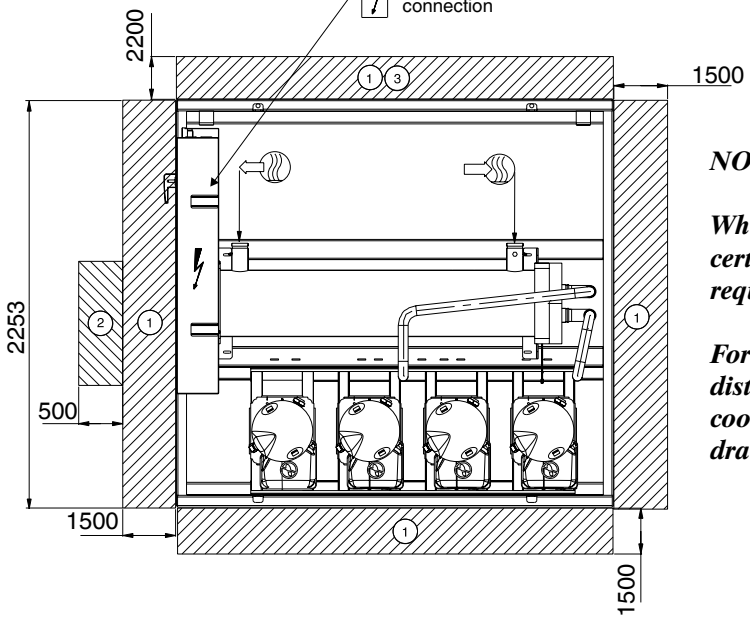

Legend:

All dimensions are in mm.

1. Clearances required for maintenance and air flow
2. Clearances recommended for evaporator tube removal
3. Clearances recommended for heat exchanger removal

Water inlet

Water outlet

Air outlet, do not obstruct

Control box

Options 116	B, C, F, G	M, N, P, Q
A	with valve	without valve

NOTE: Non-contractual drawings.

When designing an installation, refer to the certified dimensional drawings, available on request.

For the positioning of the fixing points, weight distribution points and centre of gravity coordinates please refer to the dimensional drawings.

3.3 - 30RB 302-522

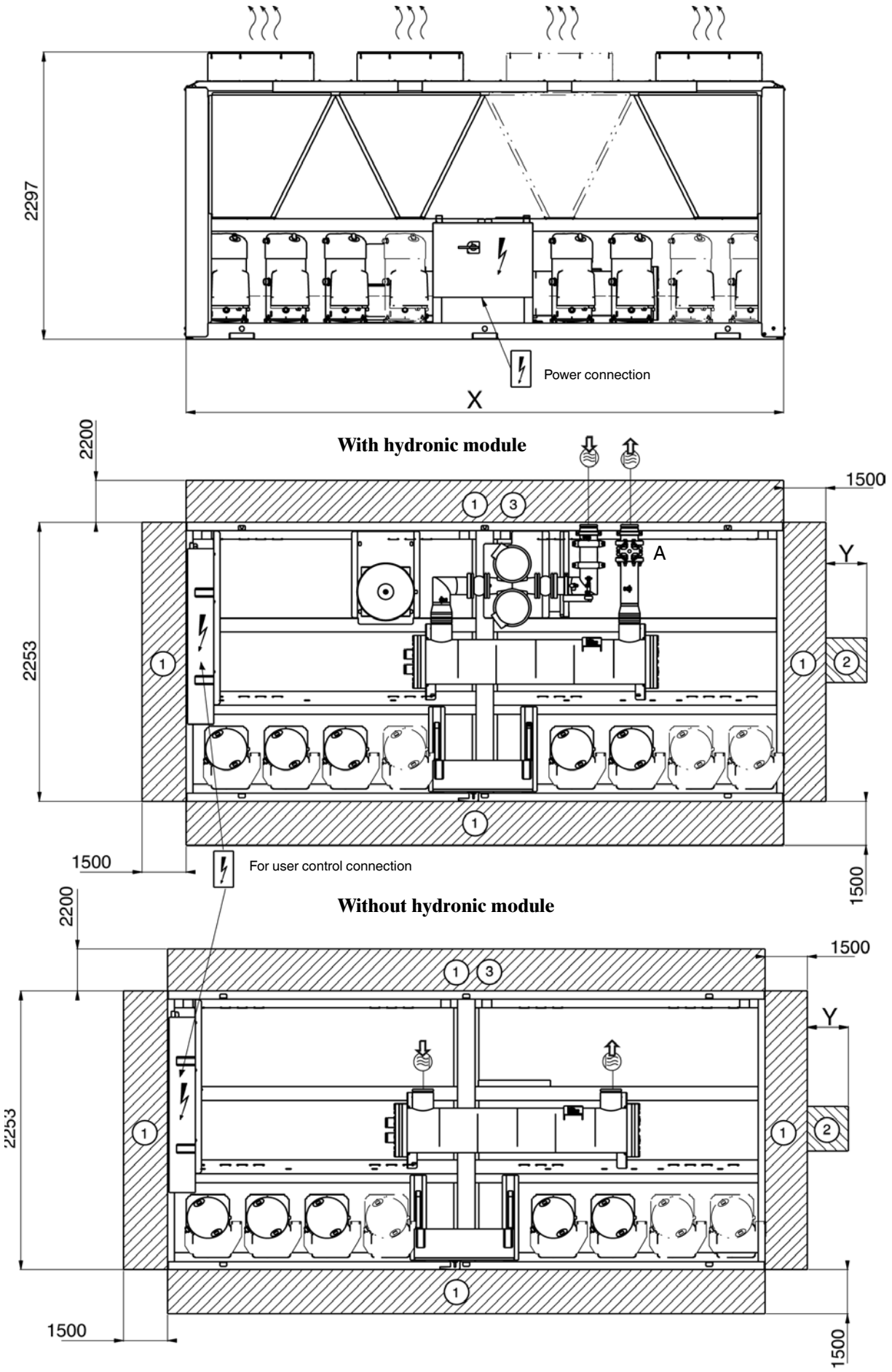

Options 116	B, C, F, G	M, N, P, Q
A	with valve	without valve

30RB	X	Y
302-402	3604	200
432-522	4798	0

3.4 - 30RB 602-802

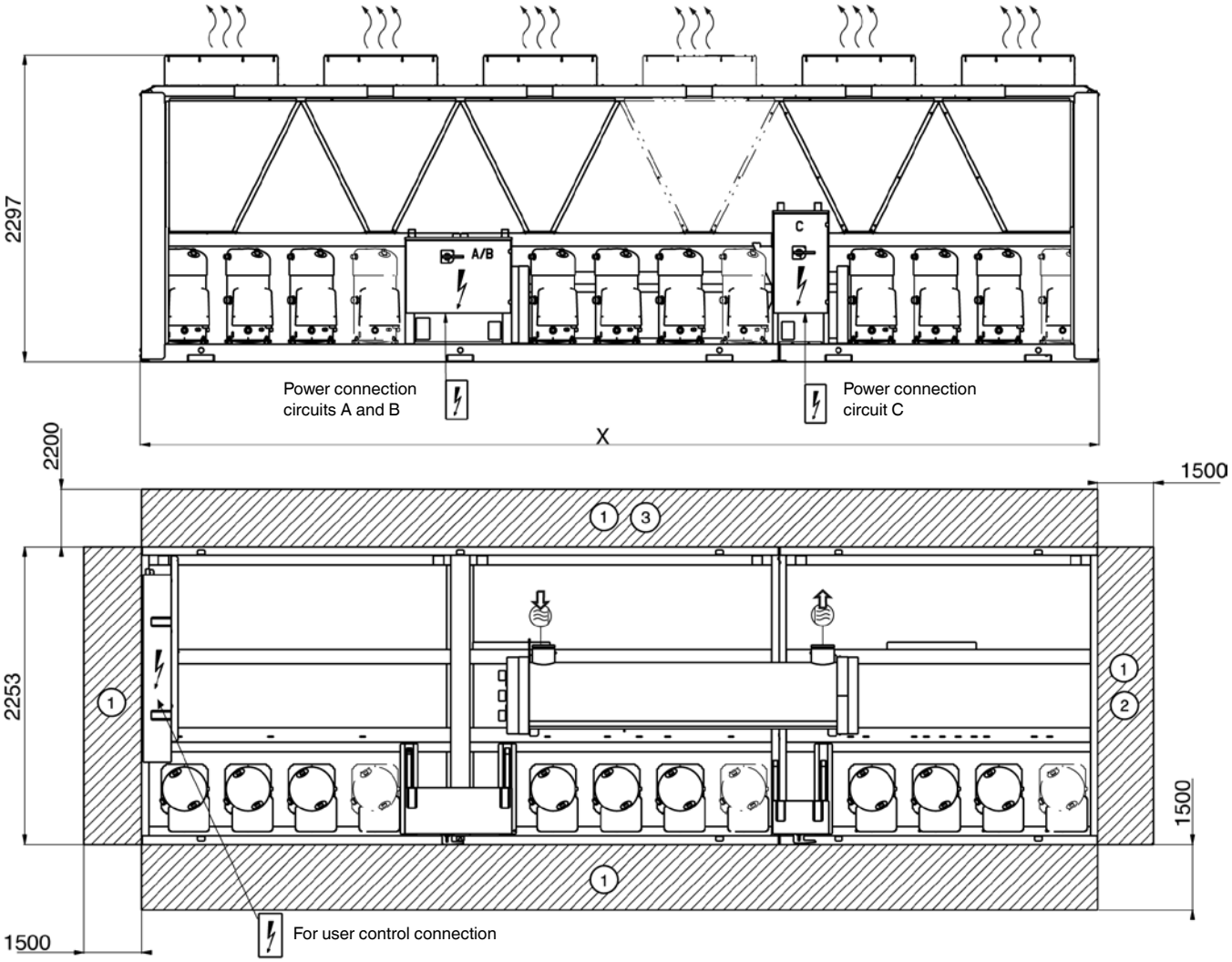

30RB	X
602-672	5992
732-802	7186

Legend:
All dimensions are in mm.

(1) Clearances required for maintenance and air flow

(2) Clearances recommended for evaporator tube removal

(3) Clearances recommended for heat exchanger removal

Water inlet

Water outlet

Air outlet, do not obstruct

Control box

NOTE: Non-contractual drawings.

When designing an installation, refer to the certified dimensional drawings, available on request.

For the positioning of the fixing points, weight distribution points and centre of gravity coordinates please refer to the dimensional drawings.

3.5 - Multiple chiller installation

NOTE: If the walls are higher than 2 m, contact the factory

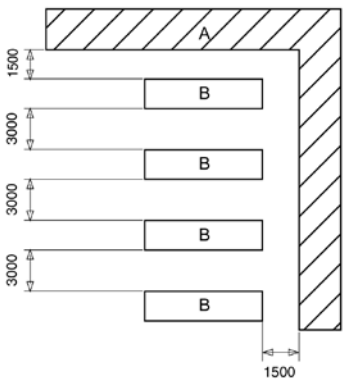

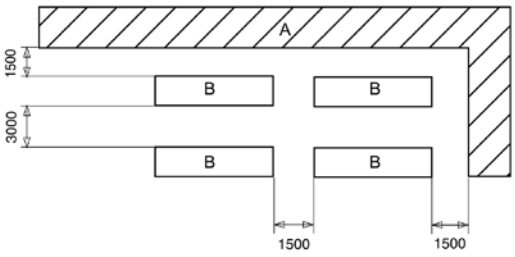

Legend:
A Wall
B Units

In case of multiple chillers (up to four units), the respective clearance between them should be increased from 1500 to 3000 mm for the side space requirement.

If necessary, add the required clearances for evaporator tube or coil removal.

4 - PHYSICAL DATA - 30RB

4.1 - 30RB 162-262 "B" standard units

30RB		162	182	202	232	262
Operating weight*						
Standard unit + option 15 + high-pressure dual-pump hydronic module option	kg	1561	1671	1770	1818	1993
Unit with option 15	kg	1385	1495	1594	1634	1809
Standard unit**	kg	1310	1420	1519	1539	1714
Sound levels						
Unit with option 15LS (very low noise level)						
Sound power level 10^{-12} W***	dB(A)	84	84	84	85	85
Sound pressure level at 10 m distance****	dB(A)	52	52	52	53	53
Unit with option 15 (low noise level)						
Sound power level 10^{-12} W***	dB(A)	89	89	89	89	89
Sound pressure level at 10 m distance****	dB(A)	57	57	57	57	57
Base unit without option 15 and without hydronic module						
Sound power level 10^{-12} W***	dB(A)	91	91	91	91	91
Sound pressure level at 10 m distance****	dB(A)	59	59	59	59	59
Compressors		Hermetic scroll, 48,3 r/s				
Circuit A		1	1	1	2	2
Circuit B		2	2	2	2	2
Circuit C		-	-	-	-	-
No. of control stages		-	-	-	-	4
Refrigerant		R-410A				
Circuit A	kg	8.8	11.6	11.6	14.0	13.2
Circuit B	kg	13.0	13.0	12.9	13.5	12.9
Control		Pro-Dialog Plus				
Minimum capacity	%	33	28	33	25	25
Condensers		All aluminium micro-channel heat exchanger (MCHX)				
Fans		Axial Flying Bird 4 with rotating shroud				
Quantity		3	4	4	4	4
Total air flow	l/s	13542	18056	18056	18056	18056
Speed	r/s	16	16	16	16	16
Evaporator		Twin-circuit plate heat exchanger				
Water volume	l	10.76	10.76	12.64	16.38	16.69
Max. water-side operating pressure without hydronic module	kPa	1000	1000	1000	1000	1000
Hydronic module (option)		Pump, Victaulic screen filter, safety valve, expansion tank, pressure gauge, water + air purge valves, flow control valve				
Water pump		Centrifugal, monocell, low or high pressure (as required), 48.3 r/s, single or twinned dual pump (as required)				
Quantity		1	1	1	1	1
Expansion tank volume	l	50	50	50	50	50
Max. water-side operating pressure with hydronic module	kPa	400	400	400	400	400
Water connections without hydronic module		Victaulic				
Diameter	inch	2-1/2	2-1/2	2-1/2	2-1/2	2-1/2
Outside tube diameter	mm	76.1	76.1	76.1	76.1	76.1
Water connections with hydronic module		Victaulic				
Diameter	inch	3	3	3	3	3
Outside tube diameter	mm	88.9	88.9	88.9	88.9	88.9
Chassis paint colour		Colour code: RAL 7035				

* Weight shown is a guideline only. To find out the unit refrigerant charge, please refer to the unit nameplate.
** Standard unit = base unit without option 15 and hydronic module option.
*** In accordance with ISO 9614-1 and certified by Eurovent.
**** For information, calculated from the sound power level Lw(A).

4.2 - 30RB 162-262 "B" units with option 280 and 30RB 302-802 units

30RB		162	182	202	232	262	302	342	372	402	432	462	522	602	672	732	802
Operating weight*																	
Standard unit + option 15 + high-pressure dual-pump hydronic module option	kg	1896	2006	2093	2118	2292	2911	3102	3258	3358	3720	3977	4183	-	-	-	-
Unit with option 15	kg	1720	1830	1917	1934	2108	2606	2797	2913	3013	3375	3582	3768	4828	5091	5597	5861
Standard unit**	kg	1645	1755	1842	1839	2013	2489	2680	2779	2879	3224	3431	3600	4627	4873	5362	5609
Sound levels																	
Unit with option 15LS (very low noise level)																	
Sound power level 10^{-12} W***	dB(A)	84	84	84	85	85	86	86	87	87	88	88	88	89	89	89	90
Sound pressure level 10 m distance****	dB(A)	52	52	52	53	53	54	54	55	55	55	55	56	56	57	57	57
Unit with option 15 (low noise level)																	
Sound power level 10^{-12} W***	dB(A)	89	89	89	89	89	90	90	91	91	92	92	92	93	93	94	94
Sound pressure level 10 m distance****	dB(A)	57	57	57	57	57	58	58	59	59	60	60	60	61	61	61	62
Base unit without option 15 and without hydronic module																	
Sound power level 10^{-12} W***	dB(A)	91	91	91	91	91	92	92	93	93	94	94	94	95	95	96	96
Sound pressure level 10 m distance****	dB(A)	59	59	59	59	59	60	60	61	61	62	62	62	62	63	63	64
Compressors		Hermetic scroll, 48.3 r/s															
Circuit A		1	1	1	2	2	3	3	3	3	4	4	4	3	3	4	4
Circuit B		2	2	2	2	2	2	2	3	3	3	3	4	3	3	4	4
Circuit C		-	-	-	-	-	-	-	-	-	-	-	-	3	4	3	4
No. of control stages		-	-	-	-	4	5	5	6	6	7	7	8	9	10	11	12
Refrigerant		R-410A															
Circuit A	kg	9.2	11	11	13.5	13.5	18.5	19.5	19.5	19	24.3	24.5	24.5	21.5	21.5	26	26
Circuit B	kg	12.8	12.8	12.8	13	13	13	14	19.5	20	21.5	21.5	25.5	22	21.5	28	28
Circuit C	kg	-	-	-	-	-	-	-	-	-	-	-	-	23.5	28	24	31
Control		Pro-Dialog Plus															
Minimum capacity	%	33	28	33	25	25	18	20	15	17	13	14	13	11	10	9	8
Condensers		All aluminium micro-channel heat exchanger (MCHX)															
Fans		Axial Flying Bird 4 with rotating shroud															
Quantity		3	4	4	4	4	5	5	6	6	7	7	8	9	10	11	12
Total air flow	l/s	13542	18056	18056	18056	18056	22569	22569	27083	27083	31597	31597	36111	40623	45139	49653	54167
Speed	r/s	16	16	16	16	16	16	16	16	16	16	16	16	16	16	16	16
Evaporator		Direct expansion, shell-and-tube															
Water volume	l	110	110	110	110	110	110	125	125	125	113	113	113	284	284	284	284
Max. water-side operating pressure without hydronic module	kPa	1000	1000	1000	1000	1000	1000	1000	1000	1000	1000	1000	1000	1000	1000	1000	1000
Hydronic module (option)		Pump, Victaulic screen filter, safety valve, expansion tank, pressure gauge, water + air purge valves, flow control valve															
Water pump		Centrifugal, monocell, low or high pressure (as required), 48.3 r/s, single or twinned dual pump (as required)															
Quantity		1	1	1	1	1	1	1	1	1	1	1	1	-	-	-	-
Expansion tank volume	l	50	50	50	50	50	80	80	80	80	80	80	80	-	-	-	-
Max. water-side operating pressure with hydronic module	kPa	400	400	400	400	400	400	400	400	400	400	400	400	-	-	-	-
Water connections without hydronic module		Victaulic															
Diameter	inch	3	3	3	3	3	4	4	4	4	6	6	6	6	6	6	6
Outside tube diameter	mm	88.9	88.9	88.9	88.9	88.9	114.3	114.3	114.3	114.3	168.3	168.3	168.3	168.3	168.3	168.3	168.3
Water connections with hydronic module		Victaulic															
Diameter	inch	3	3	3	3	3	4	4	4	4	5	5	5	-	-	-	-
Outside tube diameter	mm	88.9	88.9	88.9	88.9	88.9	114.3	114.3	114.3	114.3	139.7	139.7	139.7	-	-	-	-
Chassis paint colour		Colour code: RAL 7035															

* Weight shown is a guideline only. To find out the unit refrigerant charge, please refer to the unit nameplate.
** Standard unit = base unit without option 15 and hydronic module option.
*** In accordance with ISO 9614-1 and certified by Eurovent.
**** For information, calculated from the sound power level Lw(A).

5 - ELECTRICAL DATA - 30RB

5.1 - 162-262 “B” standard (units and units with option 280) and 30RB 302-802 units

30RB (without hydronic module)		162	182	202	232	262	302	342	372	402	432	462	522	602	672	732	802
Power circuit																	
Nominal power supply	V-ph-Hz	400-3-50															
Voltage range	V	360-440															
Control circuit supply		24 V, via internal transformer															
Nominal unit current draw*																	
Circuits A + B (one supply)	A	101	113	129	135	167	185	209	227	251	269	293	334	251	251	334	334
Circuit C (separate supply)	A	-	-	-	-	-	-	-	-	-	-	-	-	125	167	125	167
Maximum unit power input**																	
Circuits A + B (one supply)	kW	76	85	98	102	127	140	159	172	191	204	223	255	191	191	255	255
Circuit C (separate supply)	kW	-	-	-	-	-	-	-	-	-	-	-	-	96	127	96	127
Cosine phi, unit at max. capacity**		0.84	0.84	0.84	0.84	0.84	0.84	0.84	0.84	0.84	0.84	0.84	0.84	0.84	0.84	0.84	0.84
Maximum unit current draw (Un-10%)***																	
Circuits A + B (one supply)	A	143	159	183	191	239	263	299	323	359	383	419	478	359	359	478	478
Circuit C (separate supply)	A	-	-	-	-	-	-	-	-	-	-	-	-	179	239	179	239
Maximum unit current draw****																	
Circuits A + B (one supply)	A	131	146	168	175	219	241	274	296	329	351	384	438	329	329	439	438
Circuit C (separate supply)	A	-	-	-	-	-	-	-	-	-	-	-	-	164	219	164	219
Maximum start-up current, standard unit (Un)†																	
Circuits A + B	A	304	353	375	348	426	448	481	502	535	557	590	645	535	535	645	645
Circuit C	A	-	-	-	-	-	-	-	-	-	-	-	-	371	426	371	426
Max. start-up current, unit with soft starter (Un)†																	
Circuits A + B†	A	259	283	305	277	356	378	411	433	466	489	521	575	-	-	-	-
Circuit C	A	-	-	-	-	-	-	-	-	-	-	-	-	-	-	-	-

* Standardised Eurovent conditions: evaporator entering/leaving water temperature 12°C/7°C, outside air temperature 35°C, evaporator fouling factor 0.18 x 10^{-4} (m^2K)/W.
** Power input, compressors and fans, at the unit operating limits (saturated suction temperature 10°C, saturated condensing temperature 65°C) and nominal voltage of 400 V (data given on the unit nameplate).
*** Maximum unit operating current at maximum unit power input and 360 V.
**** Maximum unit operating current at maximum unit power input and 400 V (values given on the unit nameplate).
† Maximum instantaneous start-up current at operating limit values (maximum operating current of the smallest compressor(s) + fan current + locked rotor current of the largest compressor).
Fan motor electrical data: current used in the tables below:
Units at Eurovent conditions and motor ambient air temperature of 50°C at 400 V:
3.8 A, start-up current 20 A, power input 1.75 kW.
These values are those given on the motor nameplate.

5.2 - Short-circuit stability current

Short-circuit stability current (TN system)*

30RB		162	182	202	232	262	302	342	372	402	432	462	522	602	672	732	802
Unit without main disconnect (except for units 30RB 162 to 262, that are supplied with the disconnect switch installed as standard)																	
With fuses upstream - maximum fuse values assigned (gL/gG)																	
Circuits A and B	A	-	-	-	-	-	500	500	500	500	630/500	630/500	630/500	630/500	630/500	630/500	630/500
Circuit C	A	-	-	-	-	-	-	-	-	-	-	-	-	400	400	400	400
With fuses upstream - admissible rms current value (gL/gG)																	
Circuits A and B	kA	-	-	-	-	-	70	70	70	70	60/70	60/70	60/70	70	70	60/70	60/70
Circuit C	kA	-	-	-	-	-	-	-	-	-	-	-	-	60	60	60	60
Unit with optional main disconnect without fuse (standard for units 30RB 162 to 262, and option for units 30RB 302 to 802)																	
Short-time assigned current Icw (1s) rms value/peak Ipk*****																	
Circuits A and B	kA/kA	9/26	9/26	9/26	9/26	9/26	13/26	13/26	13/26	13/26	15/30	15/30	15/30	13/26	13/26	15/30	15/30
Circuit C	kA/kA	-	-	-	-	-	-	-	-	-	-	-	-	13/26	13/26	13/26	13/26
With fuses upstream - maximum fuse values assigned (gL/gG)																	
Circuits A and B	A	200	200	200/250	250/315†	250/315†	400	400	400	400	500	630	630	400	400	630	630
Circuit C	A	-	-	-	-	-	-	-	-	-	-	-	-	400	400	400	400
With fuses upstream - conditional short-circuit assigned current Icc/Icf††																	
Circuits A and B	kA	50	50	50	50	50	50	50	50	50	50	50	50	50	50	50	50
Circuit C	kA	-	-	-	-	-	-	-	-	-	-	-	-	50	50	50	50
Unit with optional main disconnect with fuses (not available for units 30RB 162 to 262, and option for units 30RB 302 to 802)																	
Short-circuit stability current Icc/Icf†† increased with fuses - maximum fuse values assigned (gL/gG)																	
Circuits A and B	kA	-	-	-	-	-	315	315	400	400	400	630	630	400	400	630	630
Circuit C	kA	-	-	-	-	-	-	-	-	-	-	-	-	250	250	250	250
Short-circuit stability current Icc/Icf†† increased with fuses - admissible rms current value (gL/gG)																	
Circuits A and B	kA	-	-	-	-	-	50	50	50	50	50	50	50	50	50	50	50
Circuit C	kA	-	-	-	-	-	-	-	-	-	-	-	-	50	50	50	50

* Type of system earthing
** Icw: assigned short-time current
*** Ipk: assigned current, admissible peak
† For units with options 12 and 116 use the higher value.
†† Icc/Icf: assigned conditional short-circuit current

IT system:
The short circuit current stability values given above for the TN system are also valid for IT for units 30RB 302 to 522. For units 30RB 162 to 262 and 30RB 602 to 802 modifications are required.

5.3 - Electrical data, hydronic module (sizes 162 to 522)

The pumps that are factory-installed in these units have motors with efficiency class IE2. The additional electrical data required* is as follows:

Motors of single and dual low-pressure pumps for 30RB162-262 B standard units (options 116F, 116G, 116P, 116Q)

No.**	Description***		30RB				
			162	182	202	232	262
1	Nominal efficiency at full load and nominal voltage	%	83.4	83.4	83.4	83.4	84.8
1	Nominal efficiency at 75% rated load and nominal voltage	%	82.9	82.9	82.9	82.9	84.5
1	Nominal efficiency at 50% rated load and nominal voltage	%	80.4	80.4	80.4	80.4	83.1
2	Efficiency level		IE2				
3	Year of manufacture		This information varies depending on the manufacturer and model at the time of incorporation. Please refer to the motor name plates.				
4	Manufacturer's name and trademark, commercial registration number and place of manufacturer						
5	Product's model number						
6	Number of motor poles		2	2	2	2	2
7-1	Rated shaft power output at full load and nominal voltage (400 V)	kW	2.2	2.2	2.2	2.2	3
7-2	Maximum power input (400 V)****	kW	2.6	2.6	2.6	2.6	3.5
8	Rated input frequency	Hz	50	50	50	50	50
9-1	Rated voltage	V	3 x 400				
9-2	Maximum current drawn (400 V)†	A	4.4	4.4	4.4	4.4	5.8
10	Rated speed	r/s (rpm)	48 (2900)				
11	Product disassembly, recycling or disposal at end of life		Disassembly using standard tools. Disposal and recycling using an appropriate company.				
12	Operating conditions for which the motor is specifically designed						
	I - Altitudes above sea level	m	< 1000††				
	II - Ambient air temperature	°C	< 40				
	IV - Maximum air temperature		Please refer to the operating conditions given in this manual or in the specific conditions in the Carrier selection programs.				
	V - Potentially explosive atmospheres		Non-ATEX environment				

Motors of single and dual low-pressure pumps for 30RB 162-262 B units with option 280 and 30RB 302-522 units (options 116F, 116G, 116P, 116Q)

No.**	Description***		30RB											
			162	182	202	232	262	302	342	372	402	432	462	522
1	Nominal efficiency at full load and nominal voltage	%	83.4	83.4	83.4	83.4	83.4	84.8	84.8	86.1	86.1	86.1	88.6	88.6
1	Nominal efficiency at 75% rated load and nominal voltage	%	82.9	82.9	82.9	82.9	82.9	84.5	84.5	85.7	85.7	85.7	86.9	86.9
1	Nominal efficiency at 50% rated load and nominal voltage	%	80.4	80.4	80.4	80.4	80.4	83.1	83.1	84.3	84.3	84.3	85.2	85.2
2	Efficiency level		IE2											
3	Year of manufacture		This information varies depending on the manufacturer and model at the time of incorporation. Please refer to the motor name plates.											
4	Manufacturer's name and trademark, commercial registration number and place of manufacturer													
5	Product's model number													
6	Number of motor poles		2	2	2	2	2	2	2	2	2	2	2	2
7-1	Rated shaft power output at full load and nominal voltage (400 V)	kW	2.2	2.2	2.2	2.2	2.2	3	3	4	4	4	5.5	5.5
7-2	Maximum power input (400 V)****	kW	2.6	2.6	2.6	2.6	2.6	3.5	3.5	4.6	4.6	4.6	6.2	6.2
8	Rated input frequency	Hz	50	50	50	50	50	50	50	50	50	50	50	50
9-1	Rated voltage	V	3 x 400											
9-2	Maximum current drawn (400 V)†	A	4.4	4.4	4.4	4.4	4.4	5.8	5.8	7.7	7.7	7.7	10.2	10.2
10	Rated speed	r/s (rpm)	48 (2900)											
11	Product disassembly, recycling or disposal at end of life		Disassembly using standard tools. Disposal and recycling using an appropriate company											
12	Operating conditions for which the motor is specifically designed													
	I - Altitudes above sea level	m	< 1000††											
	II - Ambient air temperature	°C	< 40											
	IV - Maximum air temperature		Please refer to the operating conditions given in this manual or in the specific conditions in the Carrier selection programs.											
	V - Potentially explosive atmospheres		Non-ATEX environment											

* Required by regulation 640/2009 with regard to the application of directive 2005/32/EC on the eco-design requirements for electric motors

** Item number imposed by regulation 640/2009, annex I2b.

*** Description given by regulation 640/2009, annex I2b.

**** To obtain the maximum power input for a unit with hydronic module add the maximum unit power input from the electrical data table to the pump power input.

† To obtain the maximum unit operating current draw for a unit with hydronic module add the maximum unit current draw from the electrical data table to the pump current draw.

†† Above 1000 m, a degradation of 3% for each 500 m should be taken into consideration.

Motors of single and dual high-pressure pumps for 30RB 162-262 B units with or without option 280 and 30RB 302-522 units (options 116B, 116C, 116M, 116N)

No.**	Description***		30RB											
			162	182	202	232	262	302	342	372	402	432	462	522
1	Nominal efficiency at full load and nominal voltage	%	86.1	86.1	86.1	86.1	86.1	88.6	88.6	88.5	88.5	88.5	90.5	90.5
1	Nominal efficiency at 75% rated load and nominal voltage	%	85.7	85.7	85.7	85.7	85.7	88.9	88.9	87.7	87.7	87.7	89.7	89.7
1	Nominal efficiency at 50% rated load and nominal voltage	%	84.3	84.3	84.3	84.3	84.3	85.2	85.2	85.2	85.2	85.2	85.7	85.7
2	Efficiency level		IE2											
3	Year of manufacture		This information varies depending on the manufacturer and model at the time of incorporation. Please refer to the motor name plates.											
4	Manufacturer's name and trademark, commercial registration number and place of manufacturer													
5	Product's model number													
6	Number of motor poles		2	2	2	2	2	2	2	2	2	2	2	2
7-1	Rated shaft power output at full load and nominal voltage (400 V)	kW	4	4	4	4	4	5.5	5.5	7.5	7.5	7.5	11	11
7-2	Maximum power input (400 V)****	kW	4.6	4.6	4.6	4.6	4.6	6.2	6.2	8.5	8.5	8.5	12.1	12.1
8	Rated input frequency	Hz	50	50	50	50	50	50	50	50	50	50	50	50
9-1	Rated voltage	V	3 x 400											
9-2	Maximum current drawn (400 V)†	A	7.7	7.7	7.7	7.7	7.7	10.2	10.2	13.7	13.7	13.7	20.5	20.5
10	Rated speed	r/s (rpm)	48 (2900)											
11	Product disassembly, recycling or disposal at end of life		Disassembly using standard tools. Disposal and recycling using an appropriate company											
12	Operating conditions for which the motor is specifically designed													
	I - Altitudes above sea level	m	< 1000††											
	II - Ambient air temperature	°C	< 40											
	IV - Maximum air temperature		Please refer to the operating conditions given in this manual or in the specific conditions in the Carrier selection programs.											
	V - Potentially explosive atmospheres		Non-ATEX environment											

* Required by regulation 640/2009 with regard to the application of directive 2005/32/EC on the eco-design requirements for electric motors
** Item number imposed by regulation 640/2009, annex I2b.
*** Description given by regulation 640/2009, annex I2b.
**** To obtain the maximum power input for a unit with hydronic module add the maximum unit power input from the electrical data table to the pump power input.
† To obtain the maximum unit operating current draw for a unit with hydronic module add the maximum unit current draw from the electrical data table to the pump current draw.
†† Above 1000 m, a degradation of 3% for each 500 m should be taken into consideration.

5.4 - Compressor usage and electrical data

Compressor	I Nom	I Max (Un)	I Max (Un-10%)	LRA (Un)	Cosine Phi (max.)	Circuit	162	182	202	232	262	302	342	372	402	432	462	522	602	672	732	802
00PPG-00047-0903A	30	40	44	215	0.86	A	1	-	-	2	-	3	-	-	-	-	-	-	-	-	-	-
						B	2	2	-	2	-	-	-	3	-	3	-	-	-	-	-	-
						C	-	-	-	-	-	-	-	-	-	-	-	-	-	-	-	-
00PPG-00047-1003A	38	51	56	260	0.86	A	-	1	1	-	2	-	3	3	3	4	4	4	3	3	4	4
						B	-	-	2	-	2	2	2	-	3	-	3	4	3	3	4	4
						C	-	-	-	-	-	-	-	-	-	-	-	-	3	4	3	4

Legend
I Nom Nominal current draw at Eurovent conditions (see definition of conditions under nominal unit current draw), A
I Max Maximum operating current at 360 V, A
LRA Locked rotor current, A

5.5 - Electric power user reserve

There are only power reserves on the units without hydronic modules. The reserve is the value corresponding to the high pressure pump capacity (see information in the hydronic module data table). Units that do not have the hydronic module option (30RB 602 to 802) have no reserves.

Control circuit power reserve:
The TC transformer with all possible options connected makes 1A available for 24 V, 50 Hz.

For the same TC transformer the 230 V, 50 Hz circuit with connection ribbon only permits supply to the battery chargers for portable computers, 0.8 A at 230 V maximum.

IMPORTANT: Only connect doubly-insulated class II apparatus to these ribbons.

6.1 - Unit operating range

30RB 162-262 "B" standard units and units with option 280

Evaporator		Minimum	Maximum
Entering water temperature at start-up	°C	8*	40
Leaving water temperature during operation	°C	5	15**
Condenser		**Minimum**	**Maximum**
Outdoor ambient operating temperature			
Standard unit	°C	0***/10†	48
Unit with option 28B-C (winter operation)	°C	-10	48
Unit with option 28 (winter operation)	°C	-20	48
Available static pressure			
Standard unit (outdoor installation)	Pa	0	0
Unit with option 12 (indoor installation)	Pa	0****	200

30RB 302-802 units

Evaporator		Minimum	Maximum
Entering water temperature at start-up	°C	6,8*	40
Leaving water temperature during operation	°C	3,3	15**
Condenser		**Minimum**	**Maximum**
Outdoor ambient operating temperature			
Standard unit	°C	0***	48
Unit with option 28B-C (winter operation)	°C	-10	48
Unit with option 28 (winter operation)	°C	-20	48
Available static pressure			
Standard unit (outdoor installation)	Pa	0	0
Unit with option 12 (indoor installation)	Pa	0****	200

* For application requiring operation at less than 8 or 6.8°C respectively, contact Carrier for unit selection using the Carrier electronic catalog.

** For an application, requiring operation up to +15°C leaving water temperature, contact Carrier for the selection of the unit.

*** For operation from 0°C to -10°C the units must be equipped with option 28B-C "Winter operation". For operation from 0°C to -20°C the units must be equipped with option 28 "Winter operation". For both options the unit must either be equipped with the evaporator frost protection option (for units without hydronic module option) or the evaporator and hydronic module frost protection option (for units with hydronic module option) or the water loop must be protected against frost by the installer, using an anti-freeze solution.
Maximum outside temperature: For transport and storage of the 30RB units the minimum and maximum allowable temperatures are –20°C and +48°C. It is recommended that these temperatures are used for transport by container.

**** Unit with fans with available pressure up to 200 Pa.

† 30RB 162 units use option 28B-C for outside temperatures below 10°C.

Operating range 30RB 162-262 "B" standard units and units with option 280

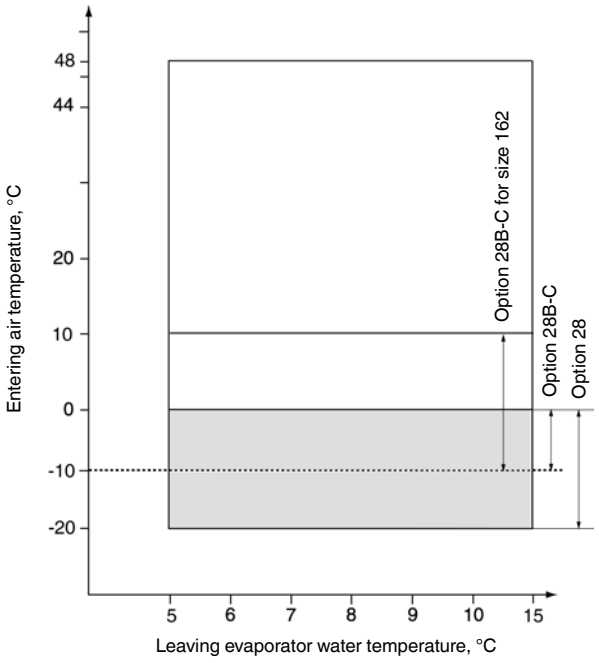

Operating range 30RB 302-802 units

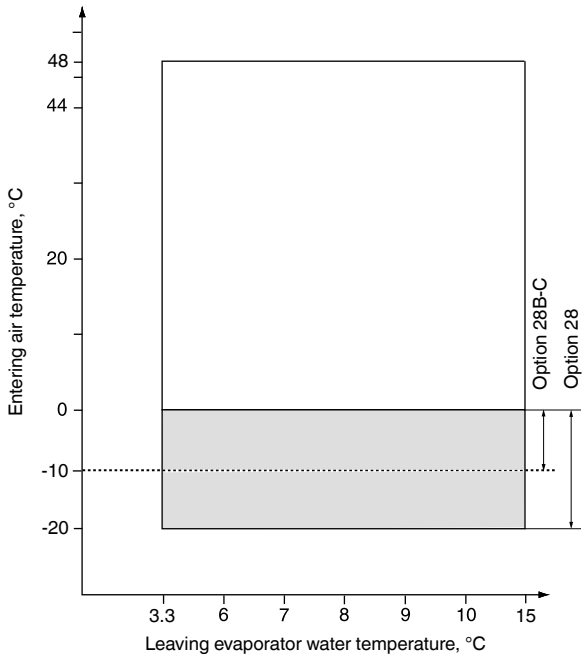

Notes
1. Evaporator ΔT = 5 K
2. The evaporator is protected against frost down to -20°C.

Legend
Standard unit operating at full load.
Operating range, units equipped with options 28 and 28B-C "Winter operation". Option 28B-C (with two-speed lead fan for each circuit) allows operation down to -10°C outside temperature.
Option 28 (with variable-speed lead fan for each circuit) allows operation down to -20°C outside temperature. In addition to options 28 and 28B-C the unit must either be equipped with the evaporator frost protection option (for units without hydronic module option) or the evaporator and hydronic module frost protection option (for units with hydronic module option) or the water loop must be protected by the installer by adding a frost protection solution.

ATTENTION: Option 28 "Winter operation"
If the outside temperature is below -10°C and the unit has been switched off for more than 4 hours, it is necessary to wait two hours after the unit has been switched on again to allow the frequency converter to warm up.

6.2 - Minimum chilled water flow (units without hydronic module)

The minimum chilled water flow is shown in the table on the next page. If the system flow is less than this, the evaporator flow can be recirculated, as shown in the diagram.

For minimum chilled water flow rate

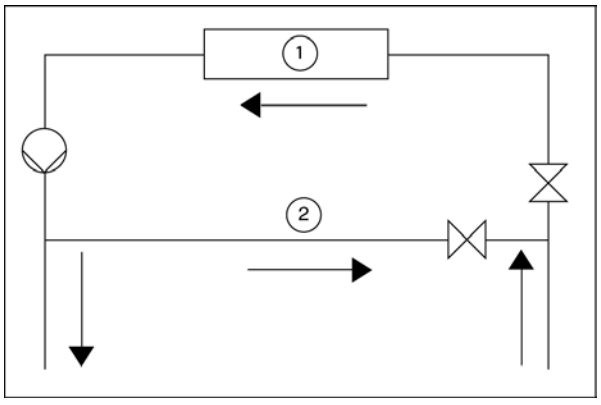

Legend
1 Evaporator
2 Recirculation

6.3 - Maximum chilled water flow (units without hydronic module)

The maximum chilled water flow is shown in the table on the next page. If the system flow exceeds the maximum value, it can be bypassed as shown in the diagram.

For maximum chilled water flow rate

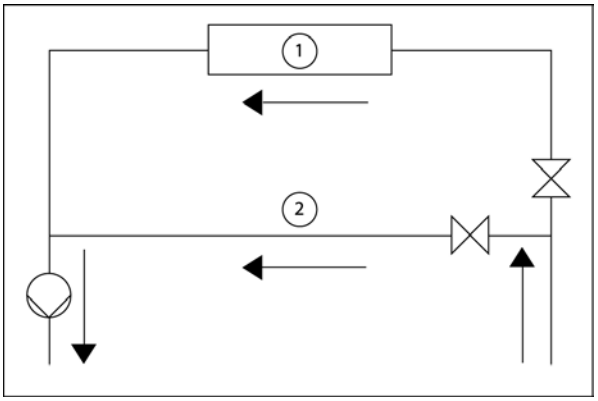

Legend
1 Evaporator
2 Bypass

6.4 - Variable flow evaporator

Variable evaporator flow can be used in standard chillers. The flow rate must be higher than the minimum flow given in the table of permissible flow rates and must not vary by more than 10% per minute. If the flow rate changes more rapidly, the system should contain a minimum of 6.5 litres of water per kW instead of 2.5 l/kW.

6.5 - Minimum system water volume

Whichever the system, the water loop minimum capacity is given by the formula:

Capacity = Cap (kW) x N Litres

Application	N
Normal air conditioning	3.25
Process type cooling	6.5

Where Cap is the nominal system cooling capacity (kW) at the nominal operating conditions of the installation.

This volume is necessary for stable operation.

It can be necessary to add a buffer water tank to the circuit in order to achieve the required volume. The tank must itself be internally baffled in order to ensure proper mixing of the liquid (water or brine). Refer to the examples below.

Connection to a buffer tank

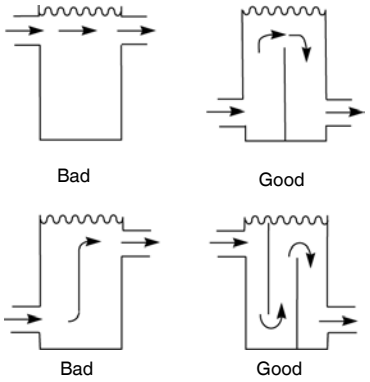

6.6 - Maximum system water volume

Units with hydronic module incorporate an expansion tank that limits the water volume. The table below gives the maximum loop volume for pure water or ethylene glycol with various system concentrations, as well as the static pressures. If the maximum volume is insufficient, compared to the minimum system water loop volume, an additional expansion tank must be added to the system.

Maximum water loop volume, l

30RB		162-262			302-522		
Static pressure	**bar**	**1**	**2**	**2.5**	**1**	**2**	**2.5**
Pure water		2400	1600	1200	3960	2640	1980
10% ethylene glycol		1800	1200	900	2940	1960	1470
20% ethylene glycol		1320	880	660	2100	1400	1050
30% ethylene glycol		1080	720	540	1740	1160	870
40% ethylene glycol		900	600	450	1500	1000	750

6.7 - Evaporator flow rate

30RB 162-262 "B" standard units

30RB	Minimum flow rate. l/s	Maximum flow rate. l/s
162	2.8	13.9
182	2.8	13.9
202	2.8	14.3
232	3	14.3
262	3.5	14.3

30RB 162-262 "B" with option 280 and 30RB 302-802

30RB	Minimum flow rate. l/s	Maximum flow rate. l/s
162	2.8	28.1
182	2.8	28.1
202	2.8	28.1
232	3	26.7
262	3.5	26.7
302	3.9	26.7
342	4.4	29.4
372	4.9	29.4
402	5.2	29.4
432	5.8	31.1
462	6.1	31.1
522	6.9	31.1
602	7.9	50.6
672	8.7	50.6
732	9.6	50.6
802	10.3	50.6

* The maximum flow rate corresponds to a pressure loss of 100 kPa (heat exchanger without hydronic module).

6.8 - Pressure drop curves for the evaporator and standard entering/leaving water piping

30RB 162-262 “B” standard units

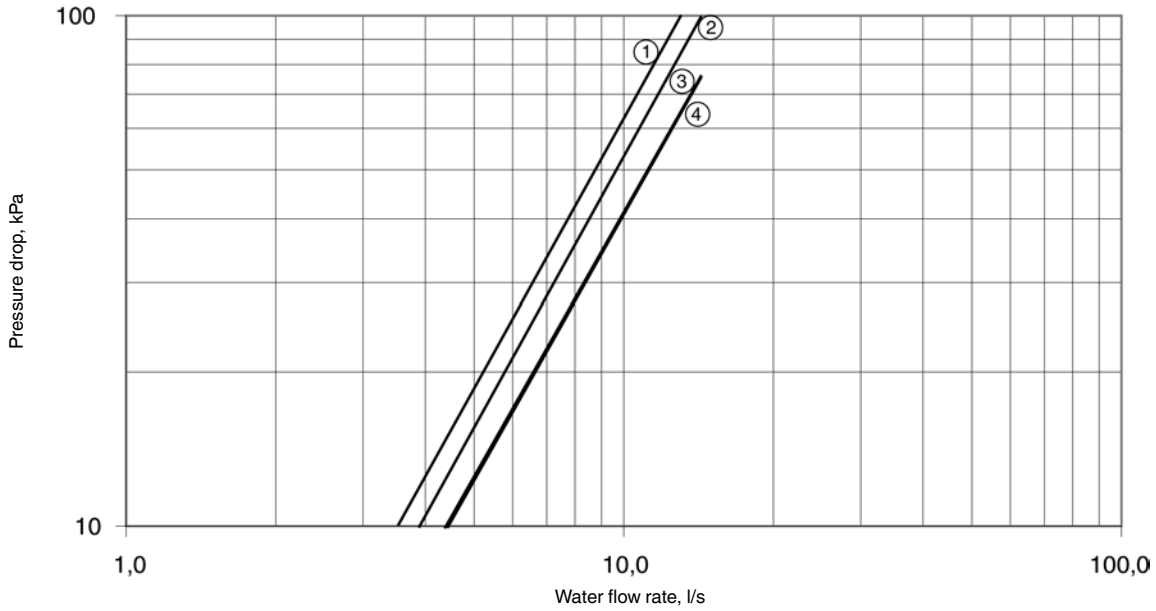

1 30RB 162-182B
2 30RB 202B
3 30RB 262B
4 30RB 232B

30RB 162-262 “B” units with option 280 and 30RB 302-802 units

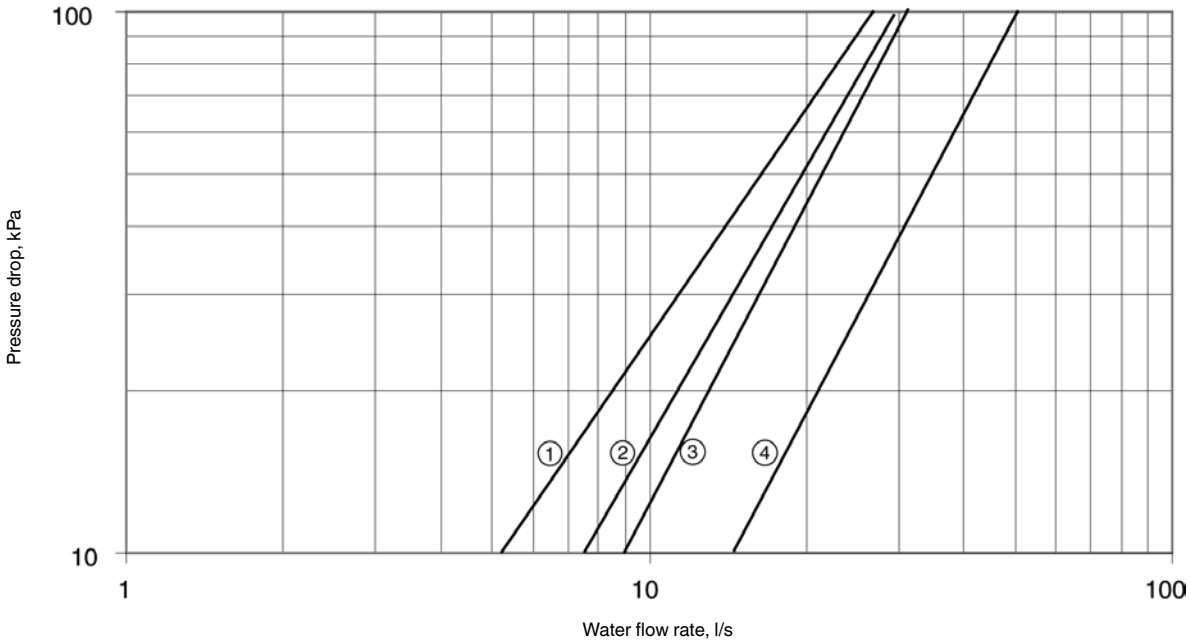

1 30RB 162-302
2 30RB 342-402
3 30RB 432-522
4 30RB 602-802

Note: If the Carrier instructions (power and water connections and installation) are not oberved, the Carrier warranty becomes invalid.

7 - ELECTRICAL CONNECTION

Please refer to the certified dimensional drawings, supplied with the unit.

7.1 - Power supply

The power supply must conform to the specification on the chiller nameplate. The supply voltage must be within the range specified in the electrical data table. For connections refer to the wiring diagrams and certified dimensional drawings.

WARNING: Operation of the chiller with an improper supply voltage or excessive phase imbalance constitutes abuse which will invalidate the Carrier warranty. If the phase imbalance exceeds 2% for voltage, or 10% for current, contact your local electricity supply at once and ensure that the chiller is not switched on until corrective measures have been taken.

7.2 - Voltage phase imbalance (%)

$$\frac{100 \times \text{max. deviation from average voltage}}{\text{Average voltage}}$$

Example:
On a 400 V - 3 ph - 50 Hz supply, the individual phase voltages were measured to be:
AB = 406 V ; BC = 399 V; AC = 394 V

Average voltage = (406 + 399 + 394)/3 = 1199/3
= 399.7 say 400 V

Calculate the maximum deviation from the 400 V average:
(AB) = 406 - 400 = 6
(BC) = 400 - 399 = 1
(CA) = 400 - 394 = 6

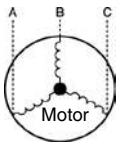

The maximum deviation from the average is 6 V. The greatest percentage deviation is:

100 x 6/400 = 1.5 %

This is less than the permissible 2% and therefore acceptable.

7.3 - Power connection/disconnect switch

30RB	Connection points	Disconnect switch without fuse (opt. 70)	Disconnect switch with fuse (opt. 70D)
Standard unit			
162-262	1	X (as standard)	
302-522	1	-	
602-802	2*	-	
Option 70			
162-262	1	X (as standard)	
302-522	1	X	
602-802	2*	X	
Option 70D			
162-262	1		N/A
302-522	1		X
602-802	2*		X

* 2 connection points: one for circuits A and B and one for circuit C
N/A Not available

7.4 - Recommended wire sections

Wire sizing is the responsibility of the installer, and depends on the characteristics and regulations applicable to each installation site. The following is only to be used as a guide-line, and does not make Carrier in any way liable. After wire sizing has been completed, using the certified dimen-sional drawing, the installer must ensure easy connection and define any modifications necessary on site.

The connections provided as standard for the field-supplied power entry cables to the general disconnect/isolator switch are designed for the number and type of wires, listed in the table on the next page.

Electrical data notes for 30RB units:

- 30RB 162-522 units have a single power connection point immediately upstream of the two main disconnect switches.
- 30RB 602-802 units have two connection points upstream of the main disconnect switches.
- The control box includes:
  - One main disconnect switch
  - Starter and motor protection devices for each compressor, the fans) and the pump
  - Control devices
- **Field connections:**
  All connections to the system and the electrical installations must be in full accordance with all applicable local codes.
- The Carrier 30RB units are designed and built to ensure conformance with these codes. The recommendations of European standard EN 60 204-1 (corresponds to IEC 60204-1) (machine safety - electrical machine components - part 1: general regulations) are specifically taken into account, when designing the electrical equipment.
- **Electrical reserves:**
  Circuit A has disconnect switches and branch sections, designed to supply the evaporator pump power input.

Notes:

- Generally the recommendations of International Electrotechnical Commission document IEC 60364 are accepted as compliance with the requirements of the installation directives. Conformance with EN 60204 is the best means of ensuring compliance with the Machines Directive § 1.5.1.
- Annex B of EN 60204-1 describes the electrical characteristics used for the operation of the machines.

1. The operating environment for the 30RB units is specified below:
- Environment* - Environment as classified in EN 60721 (corresponds to IEC 60721):
  - outdoor installation*
  - ambient temperature range: -20°C to +48°C ± 1 K, class 4K3*
  - altitude: ≤ 2000 m (see note for table 5.3 - Electrical data, hydronic module)
  - presence of hard solids, class 4S2 (no significant dust present)
  - presence of corrosive and polluting substances, class 4C2 (negligible)
  - vibration and shock, class 4M2
  - Competence of personnel, class BA4* (trained personnel - IEC 60364)
2. Power supply frequency variation: ± 2 Hz.
3. The neutral (N) line must not be connected directly to the unit (if necessary use a transformer).
4. Overcurrent protection of the power supply conductors is not provided with the unit.
5. The factory-installed disconnect switch(es)/circuit breaker(s) is (are) of a type suitable for power interruption in accordance with EN 60947-3 (corresponds to IEC 60947-3).
6. The units are designed for simplified connection on TN(s) networks (IEC 60364). For IT networks provide a local earth and consult competent local organisations to complete the electrical installation.
7. Derived currents: If protection by monitoring of derived currents is necessary to ensure the safety of the installation, the control of the cut-out value must take the presence of leak currents into consideration that result from the use of frequency converters in the unit. A value of at least 150 mA is recommended to control differential protection devices.

   Note: If particular aspects of an actual installation do not conform to the conditions described above, or if there are other conditions which should be considered, always contact your local Carrier representative.

* The required protection level for this class is IP43BW (according to reference document IEC 60529). All 30RB units are protected to IP44CW and fulfil this protection condition.

The calculations are based on the maximum machine current (see electrical data tables).

For the accessory system the following standardised installation methods are used, in accordance with IEC 60364, table 52C:
No. 17: suspended aerial lines, and No. 61: buried conduit with a derating coefficient of 20.

The calculation is based on PVC or XLPE insulated cables with copper or aluminium core. The maximum temperature is 48°C. The given wire length limits the voltage drop to < 5%.

IMPORTANT: Before connection of the main power cables (L1 - L2 - L3) on the terminal block, it is imperative to check the correct order of the 3 phases before proceeding to the connection on then terminal block or the main disconnect/isolator switch.

The current values used are given for a unit equipped with a hydronic kit operating at maximum current.

7.4.1 - Power cable entry
The power cables can enter the 30RB control box from below or from the unit side.

- Unit raised from the ground (e.g. installation on support rails): It is recommended to enter the power cables from below the control box. A removable aluminium plate below the control box allows introduction of the cables.
- Unit placed on the ground (e.g. on a concrete base): It is recommended to enter the power cables from the control box side. An aluminium plate on the control box face allows introduction of the cables. It is important to check that the power cable bend radius is compatible with the connection space available in the control box. Refer to the certified dimensional drawing for the unit.

7.4.2 - Connection extension box
This accessory permits stripping the power cables before they enter the control box, and must be used when the cable bend radius is not compatible with the connection space available in the control box. The accessory connection extension box ensures mechanical protection of the stripped cable, before it enters the control box. It must be used in the following cases:

- Unit placed on the ground and use of power cables with protective metallic armour.
- Unit placed on the ground and use of power cables with a section > 250 mm^2.

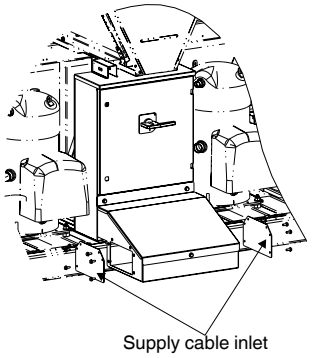

7.5 - Field control wiring

Refer to the 30RB Pro-Dialog Plus Controls IOM and the certified wiring diagram supplied with the unit for the field control wiring of the following features:

- Customer interlock (safety chain)
- Evaporator pump interlock (mandatory)
- Remote on/off switch
- Remote heat/cool switch
- Demand limit external switch 1
- Remote dual set point
- Alarm, alert and operation report
- Evaporator pump control
- Heat reclaim condenser pump control (option)
- Setpoint reset via outside air temperature sensor reset (0-10 V)
- Various interlocks on the Energy Management Module (EMM) board (accessory or option)

Table of minimum and maximum wire sections (per phase) for connection to 30RB units

	Max. connectable section per phase			Min. wire section per phase					Max. wire section per phase		
30RB	**Section, mm^2**			**Section, mm^2**			**Max length, m**	**Wire type**	**Section, mm^2**	**Max. length, m**	**Wire type**
162	1 x 240 or 2 x 150			1 x 50			180	XLPE Copper	2 x 70	225	XLPE Aluminium
182	1 x 240 or 2 x 150			1 x 50			180	XLPE Copper	2 x 70	225	XLPE Aluminium
202	1 x 240 or 2 x 150			1 x 70			215	XLPE Copper	2 x 95	260	XLPE Aluminium
232	1 x 240 or 2 x 150			1 x 70			205	XLPE Copper	2 x 95	260	XLPE Aluminium
262	1 x 240 or 2 x 150			1 x 95			178	XLPE Copper	2 x 95	260	XLPE Aluminium
302	2 x 240			1 x 120			197	XLPE Copper	2 x 120	280	XLPE Aluminium
342	2 x 240			1 x 120			185	XLPE Copper	2 x 150	300	XLPE Aluminium
372	2 x 240			1 x 150			188	XLPE Copper	2 x 185	315	XLPE Aluminium
402	2 x 240			1 x 185			190	XLPE Copper	2 x 240	330	XLPE Aluminium
432	3 x 240			1 x 185			190	XLPE Copper	2 x 240	330	XLPE Aluminium
462	3 x 240			1 x 240			205	XLPE Copper	3 x 185	395	XLPE Aluminium
522	3 x 240			2 x 95			190	XLPE Copper	3 x 240	415	XLPE Aluminium
	Circuit A	**Circuit B**	**Circuit C**	**Circuit A**	**Circuit B**	**Circuit C**					
602	2 x 240	2 x 240	2 x 185	1 x 185	1 x 185	1 x 70	190/155	XLPE Copper	2 x 185/2 x 95	430/325	XLPE Cu/XLPE Al
672	2 x 240	2 x 240	2 x 185	1 x 185	1 x 185	1 x 95	190/178	XLPE Copper	2 x 185/2 x 150	430/375	XLPE Cu/XLPE Al
732	3 x 240	3 x 240	2 x 185	2 x 95	2 x 95	1 x 70	190/155	XLPE Copper	3 x 185/2 x 95	490/325	XLPE Cu/XLPE Al
802	3 x 240	3 x 240	2 x 185	2 x 95	2 x 95	1 x 95	190/178	XLPE Copper	3 x 185/2 x 150	490/375	XLPE Cu/XLPE Al

7.6 - Power supply

After the unit has been commissioned, the power supply must only be disconnected for quick maintenance operations (one day maximum). For longer maintenance operations or when the unit is taken out of service and stored (e.g. during the winter or if the unit does not need to generate cooling) the power supply must be maintained to ensure supply to the compressor oil crankcase heaters.

8 - WATER CONNECTIONS

For dimensions and position of the water inlet and outlet connections refer to the certified dimensional drawings supplied with the unit. The water pipes must not transmit any radial or axial force to the heat exchangers nor any vibration.

The water supply must be analysed and appropriate filtering, treatment, control devices, isolation and bleed valves and circuits built in, to prevent corrosion (example: tube surface protection damage in case of impurities in the fluid), fouling and deterioration of the pump fittings.

Before any start-up verify that the heat exchange fluid is compatible with the materials and the water circuit coating. Where additives or other fluids than those recommended by Carrier are used, ensure that these are not considered as a gas, and that they are class 2, as defined in directive 97/23/EC.

Carrier recommendations on heat exchange fluids:

- No NH^{4+} ammonium ions in the water, they are very detrimental for copper. This is one of the most important factors for the operating life of copper piping. A content of several tenths of mg/l will badly corrode the copper over time. If required, use sacrificial anodes.
- Cl^- Chloride ions are also detrimental for copper with a risk of perforations by corrosion by puncture. Keep at a level below 10 mg/l.
- SO_4^{2-} sulphate ions can cause perforating corrosion, if their content is above 30 mg/l.
- No fluoride ions (<0.1 mg/l).
- No Fe^{2+} and Fe^{3+} ions with non negligible levels of dissolved oxygen must be present. Dissolved iron < 5 mg/l with dissolved oxygen < 5 mg/l.
- Dissolved silicon: silicon is an acid element of water and can also lead to corrosion risks. Content < 1 mg/l.
- Water hardness: >0.5 mmol/l. Values between 1.0 and 2.5 mmol/l are recommended. This will facilitate scale deposit that can limit corrosion of copper. Values that are too high can cause piping blockage over time. A total alkalimetric titre (TAC) below 100 mg/l is desirable.
- Dissolved oxygen: Avoid any sudden change in water oxygenation conditions. It is as detrimental to deoxygenate the water by mixing it with inert gas as it is to over-oxygenate it by mixing it with pure oxygen. The disturbance of oxygenation conditions encourages destabilisation of copper hydroxides and enlargement of particles.
- Specific resistance – electric conductivity: the higher the specific resistance, the slower the corrosion tendency. Values above 30 Ω·m are desirable. A neutral environment favours maximum specific resistance values. For electric conductivity values in the order of 20-60 mS/m can be recommended.
- pH: Ideal case pH neutral at 20-25°C (7 < pH < 8)

ATTENTION: Filling, completing and draining the water circuit charge must be done by qualified personnel, using the air purges and materials that are suitable for the products.

Charging and removing heat exchange fluids should be done with devices that must be included on the water circuit by the installer. Never use the unit heat exchangers to add heat exchange fluid.

8.1 - Operating precautions and recommendations

Before the system start-up verify that the water circuits are connected to the appropriate heat exchangers. The water circuit should be designed to have the least number of elbows and horizontal pipe runs at different levels. Below the main points to be checked for the connection:

- Observe the water inlet and outlet connections shown on the unit.
- Install manual or automatic air purge valves at all high points in the circuit.
- Use a pressure reducer to maintain pressure in the circuit(s) and install a safety valve as well as an expansion tank. Units with the hydronic module include a safety valve and an expansion tank.
- Install thermometers in both the entering and leaving water connections.
- Install drain connections at all low points to allow the whole circuit to be drained.
- Install stop valves close to the entering and leaving water connections.
- Use flexible connections to reduce the transmission of vibrations.
- Insulate the pipework, after testing for leaks, to prevent heat transmission and condensation.
- Cover the insulation with a vapour barrier. If the water piping outside the unit passes through an area where the ambient temperature is likely to fall below 0°C, it must be protected against frost (defrost solution or electric heaters).

NOTE: A screen filter must be installed in units without hydronic module. This must be installed in the water inlet piping upstream of the pressure gauge and close to the unit heat exchanger. It must be located in a position that is easily accessible for removal and cleaning. The mesh size of the filter must be 1.2 mm.

If the filter is missing, the plate heat exchanger or the shell-and-tube evaporator can quickly become fouled during the first start-up, as it will perform the filter function, and correct unit operation will be affected (reduced water flow rate due to the increased pressure drop).

Units with hydronic module include this type of filter.

- Do not introduce any significant static or dynamic pressure into the heat exchange circuit (with regard to the design operating pressures).
- Any products that may be added during the water connection stage to provide thermal insulation of the containers must be chemically neutral towards the materials and coatings on which they are placed. All original materials supplied by Carrier comply with this requirement.

8.2 - Hydronic connections

The optional hydronic modules are not compatible with open loops.

8.2.1 - Unit equipped with hydronic module options 116B, 116C, 116F, 116G

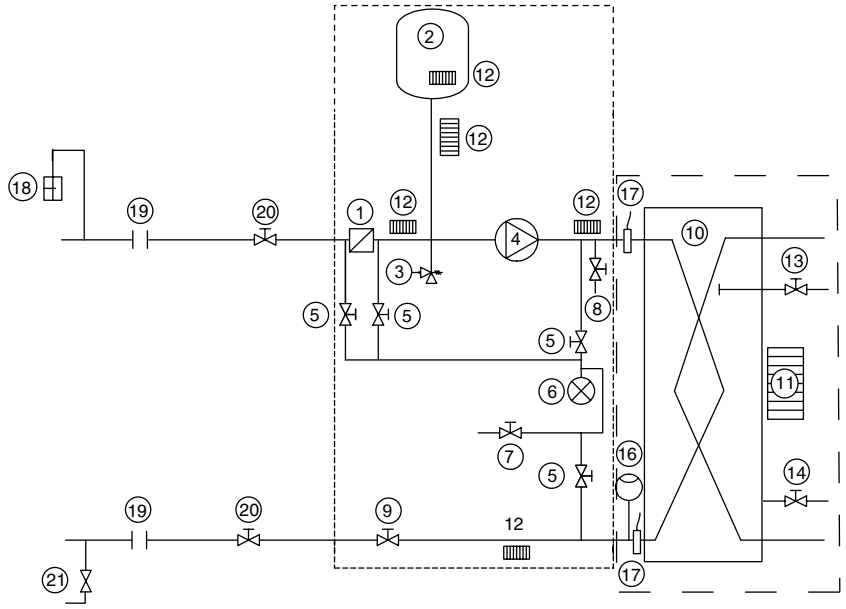

8.2.2 - Unit equipped with hydronic module options 116M, 116N, 116P, 116Q

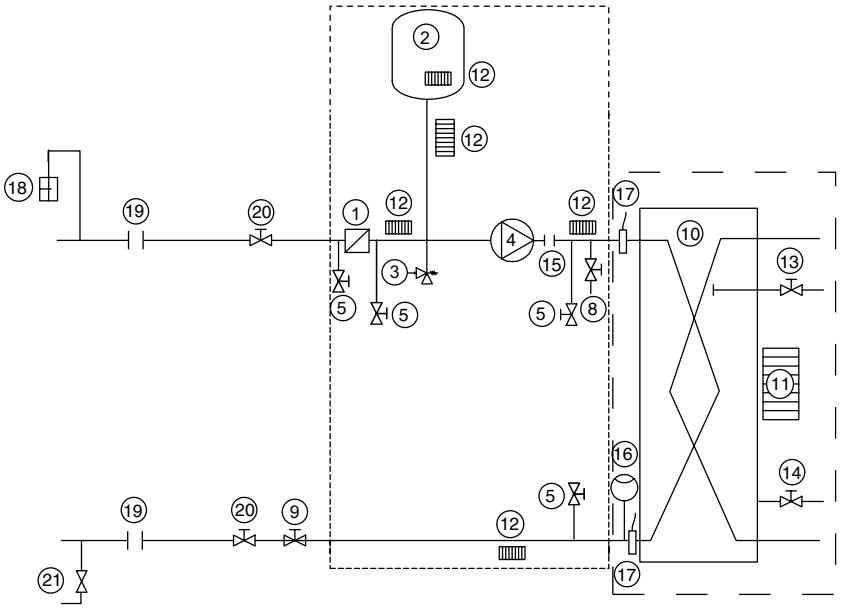

Legend

Components of the unit and hydronic module

1 Victaulic screen filter
2 Expansion tank
3 Safety valve
4 Available pressure pump
5 Pressure tap - see installation manual
6 Pressure gauge to measure the component pressure drop (if options 116B, 116C, 116F, 116 G are used) - see installation manual
7 Pressure gauge system drain valve (if options 116B, 116C, 116F, 116 G are used)
8 Drain valve
9 Flow control valve
10 Heat exchanger
11 Evaporator defrost heater
12 Hydronic module defrost heater (option)
13 Air vent (evaporator)
14 Water drain (evaporator)
15 Expansion compensator (flexible connections)
16 Flow switch
17 Water temperature

Installation components

18 Air vent
19 Flexible connection
20 Shut-off valve
21 Charge valve
22 Anti-vibration mounting
23 Pump support
24 Evaporator inlet
25 Evaporator outlet
26 Customer water inlet connection
27 Customer water outlet connection
--- Hydronic module (unit with hydronic module)
– – Limit of items supplied, chiller environment
B Only for sizes 302-522

Notes:

- The system is protected against frost (anti-freeze solution or electric heater).
- With option 42A the hydronic module is protected against frost by electric heaters (item 12).
- The unit evaporator is protected against frost by a factory-installed electric heater (‘evaporator frost protection’ option)

8.2.3 - Typical installation, unit equipped with hydronic module options 116B, 116C, 116F, 116G

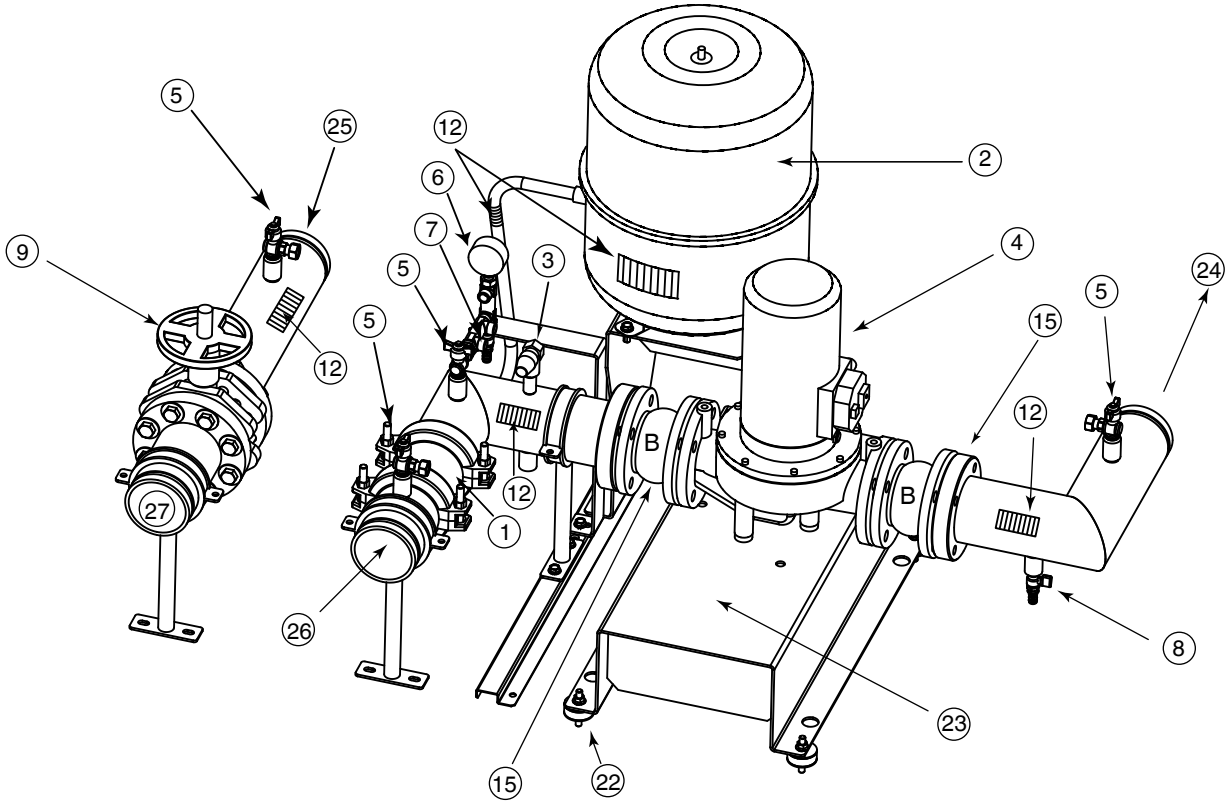

8.2.4 - Typical installation, unit equipped with hydronic module options 116M, 116N, 116P, 116Q

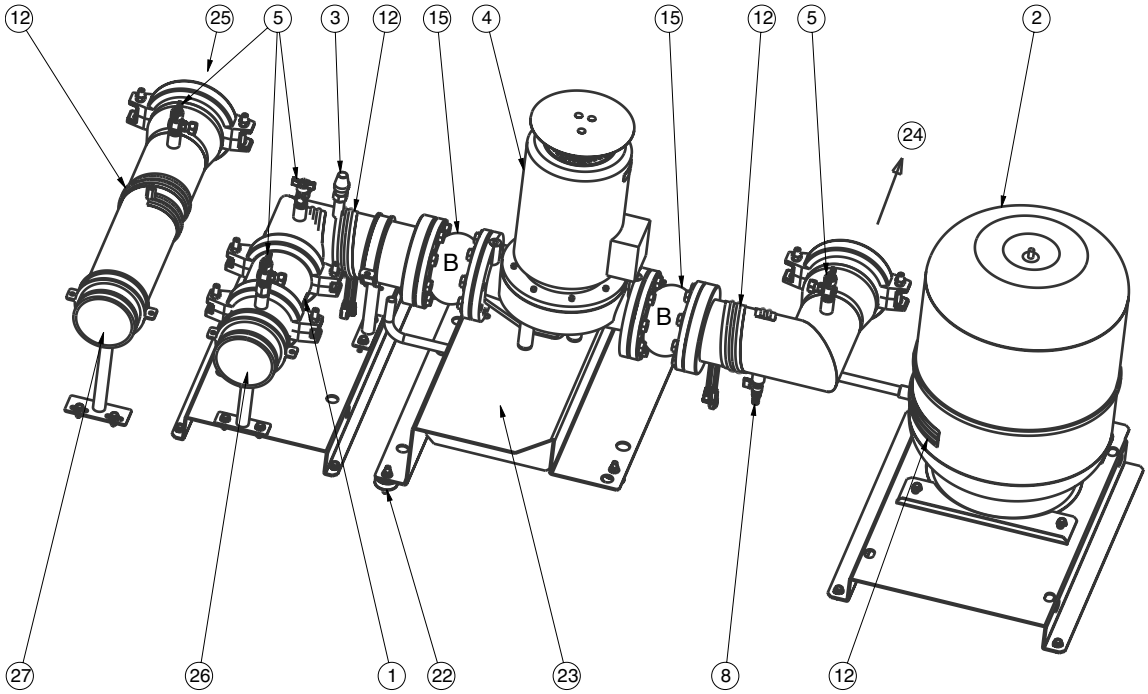

See legend on previous page, chapter 8.2.2.

8.2.5 - Unit without hydronic module option

Typical water circuit diagram - without hydronic module

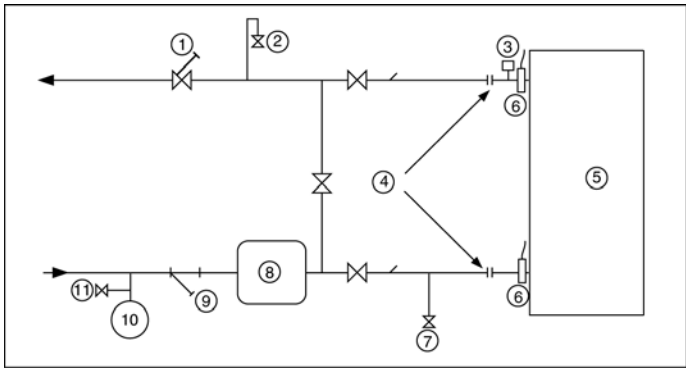

Legend

1 Control valve
2 Air vent
3 Flow switch for the evaporator (supplied)
4 Flexible connection
5 Heat exchanger
6 Temperature sensor (supplied)
7 Drain
8 Buffer tank (if needed)
9 Filter (mesh size: 1.2 mm = 20 mesh)
10 Expansion tank
11 Fill valve

8.3 - Flow control

All units are equipped with a factory-set flow switch. The unit must be interlocked with the chilled-water pump, if the unit is not equipped with the hydronic option module.

Terminals 34 and 35 are provided for field installation of the chilled water pump interlock (auxiliary contact for pump operation to be wired on site).

8.4 - Frost protection

The standard unit does not include any particular frost protection when it has shut down. It is therefore essential to check that there is no risk of the water in the hydronic circuit freezing during winter temperature conditions. If this may be the case it is essential to add an appropriate anti-freeze solution to protect the hydronic circuit down to the minimum temperature minus 10 K.

Another solution consists of draining the hydronic circuits exposed to temperatures below 0°C (must be used for units with plate heat exchangers). If the unit is not used for an extended period, protect it by circulating a protective solution. Please consult a specialist.

A third solution is to order the 'evaporator frost protection' option (factory-installed - an electric heater on the evaporator).

If the hydronic module option is used, the evaporator and hydronic module frost protection option (additional electric heaters on the hydronic module and the evaporator) must also be ordered to ensure protection of the hydronic module down to -20°C.

If option 41 has been ordered for the 30RB 162-262 "B" standard units (only in this case) and if the accessory water inlet/outlet extension pipe has been ordered, a heater must be installed for each extension to ensure that the water pipes are protected down to -20°C outside temperature.

The heat exchanger temperature sensors are part of its frost protection: if piping trace heaters are used, ensure that the external heaters do not affect the measurement of these sensors.

NOTE: With 30RB 162-262 "B" units with option 280 and 30RB 302-802 units, the hydronic module can be protected down to -10°C without the evaporator and hydronic module frost protection option provided that:

- ***the evaporator frost protection option is ordered***
- ***the pump starts up periodically to allow water circulation in the hydronic circuit. If the system is isolated by a valve, it is imperative to install a bypass as indicated below.***

Winter position

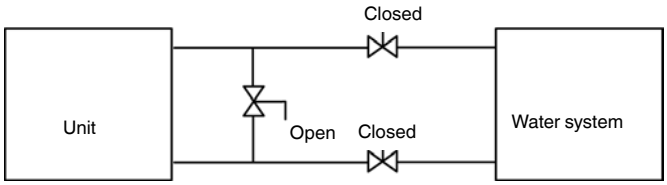

List of options for periods when the units are in standby mode				
Ambient unit temperature range	**30RB 162-262 standard units**		**30RB 162-262 units with option 280 and 30RB 302-802 standard units**	
	Without option 116	**With option 116**	**Without option 116**	**With option 116**
> 0°C to 46°C	-	-	-	-
-10°C to 0°C	Option 41 or Appropriate frost protection solution (e.g. glycol)	Option 42A* or Appropriate frost protection solution (e.g. glycol)	Option 41 or Appropriate frost protection solution (e.g. glycol) or Drain the water circuits	Option 42A* or Appropriate frost protection solution (e.g. glycol) or Drain the water circuits or Option 41 and hydronic kit pump cycling*
-20°C to 0°C				Option 42A* or Appropriate frost protection solution (e.g. glycol) or Drain the water circuits

* Allow pump circulation. If a valve is included, install a bypass (see "Winter position" diagram).

ATTENTION: If the recommendations above are not followed, any resulting frost damage is not covered by the guarantee.

The frost protection and electric heater solutions can be combined. If protection by electric heater is used, do not switch off the power supply to the unit.

IMPORTANT: The main unit disconnect switch, the auxiliary heater protection switch as well as the control circuit switch must always remain closed (to locate the components, please refer to the wiring diagram).

IMPORTANT: Depending on the climatic conditions in your area you must do the following when you shut the unit down in winter:

- ***Add ethylene glycol with an adequate concentration to protect the installation up to a temperature of 10 K below the lowest temperature likely to occur at the installation site.***
- ***If the unit is not used for an extended period, it is recommended to drain it, and as a safety precaution add ethylene glycol to the heat exchanger, using the water entering purge valve connection.***
- ***At the start of the next season, refill the unit with water and add an inhibitor.***
- ***For the installation of auxiliary equipment, the installer must comply with basic regulations, especially for minimum and maximum flow rates, which must be between the values listed in the operating limit table (application data).***
- ***If any heat transfer circuit is emptied for longer than a month, the complete circuit must be placed under nitrogen charge to avoid any risk of corrosion by differential aeration. If the heat transfer fluid does not comply with Carrier recommendations, nitrogen must be charged immediately.***

8.5 - Operation of two units in master/slave mode

For this type of operation the 'Twinning' option must be ordered.

The units supplied are then equipped with an additional sensor connected to the electronic board and located in the control box.

This sensor must be used when master/slave assembly control at the water outlet is used (it is not required for entering water control).

The customer must connect the two units via a communication bus (0.75 mm^2, twisted and shielded). Consult the 30RB Pro-Dialog Plus control manual for the connection addresses.

Master/slave operation is only possible, when the units are installed in parallel. It is not possible, if the units are installed in series.

All parameters, required for the master/slave function must be configured using the Service Configuration menu. All remote controls of the master/slave assembly (start/stop, set point, load shedding etc.) are controlled by the unit configured as master and must only be applied to the master unit.

Each unit controls its own water pump. If there is only one common pump, in cases with variable flow, isolation valves must be installed on each unit. They will be activated at the opening and closing by the control of each unit (in this case the valves are controlled using the dedicated water pump outputs). See the 30RB Pro-Dialog Plus Control IOM for a more detailed explanation.

30RB with configuration: leaving water control

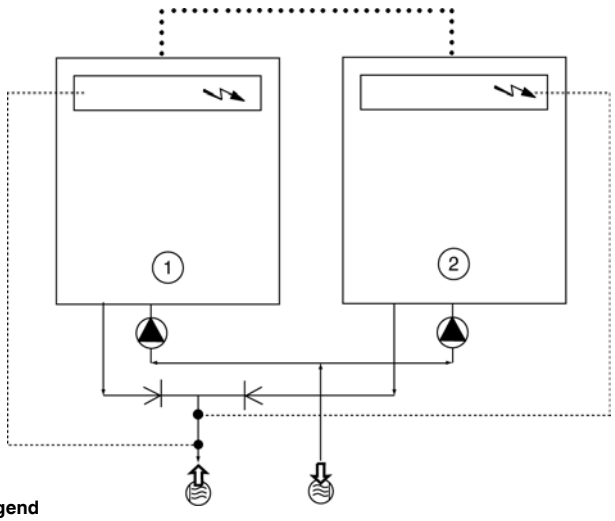

Legend

1	Master unit
2	Slave unit
	Control boxes of the master and slave units
	Water inlet
	Water outlet
	Water pumps for each unit (included as standard for units with hydronic module)
●	Additional sensors for leaving water control, to be connected to channel 1 of the slave boards of each master and slave unit
••••	CCN communication bus
——	Connection of two additional sensors

9 - NOMINAL SYSTEM WATER FLOW CONTROL

The water circulation pumps of the 30RB units have been sized to allow the hydronic modules to cover all possible configurations based on the specific installation conditions, i.e. for various temperature differences between the entering and the leaving water (ΔT) at full load, which can vary between 3 and 10 K.

This required difference between the entering and leaving water temperature determines the nominal system flow rate. It is necessary to know the nominal system flow rate to allow its control via a manual valve either provided in the water leaving piping of the module (item 9 in the typical hydronic circuit diagram) or to be installed as shown in the same diagram (chapter 8.2).

With the pressure loss generated by the control valve in the hydronic system, the valve can impose the system pressure/ flow curve on the pump pressure/flow curve, to obtain the desired operating point. The pressure drop reading in the heat exchanger and its internal piping is used to control and adjust the nominal system flow rate.

Use this specification for the unit selection to know the system operating conditions and to deduce the nominal air flow as well as the pressure drop of the heat exchanger and its internal piping at the specified conditions. If this information is not available at the system start-up, contact the technical service department responsible for the installation to get it.

These characteristics can be obtained from the technical literature using the unit performance tables for a ΔT of 5 K at the evaporator or with the Electronic Catalogue selection program for all ΔT conditions other than 5 K in the range of 3 to 10 K.

9.1 - Water flow control procedure

As the total system pressure drop is not known exactly at the start-up, the water flow rate must be adjusted with the control valve to obtain the specific flow rate for this application.

Proceed as follows:
Open the valve fully.

Start-up the pump using the forced start command (refer to the controls manual) and let the pump run for two consecutive hours to clean the hydronic circuit of the system (presence of solid contaminants).

Read the filter pressure drop by taking the difference of the readings of the pressure gauge connected to the filter inlet and outlet, using valves, if options 116B, C, F, G are used, if not install a pressure gauge after filter inlet and outlet (see typical hydronic circuit diagrams), and comparing this value after two hours of operation.

If the pressure drop has increased, this indicates that the screen filter must be removed and cleaned, as the hydronic circuit contains solid particles. In this case close the shutoff valves at the water inlet and outlet and remove the screen filter after emptying the hydronic section of the unit.

Renew, if necessary, to ensure that the filter is not contaminated. Purge the air from the circuit using the purge valves in the hydronic circuit and the system (see typical hydronic circuit diagram).

When the circuit is cleaned, read the pressures at the pressure gauge (entering water pressure - leaving water pressure), expressed in bar and convert this value to kPa (multiply by 100) to find out the pressure drop of the heat exchanger and its internal piping.

Compare the value obtained with the theoretical selection value.

It is essential to carry out systematic filter cleaning at the initial start-up, as well as after any modification in the hydronic circuit.

ATTENTION: It is essential to keep the pressure gauge purge valve open after measuring the pressure (risk of freezing during winter).

If the pressure drop measured is higher than the value specified the flow rate in the evaporator (and thus in the system) is too high. The pump supplies an excessive flow rate based on the global pressure drop of the application. In this case close the control valve one turn for options 116B, C, F, G and read the new pressure difference.

Proceed by successively closing the control valve until you obtain the specific pressure drop that corresponds to the nominal flow rate at the required unit operating point.

If the system has an excessive pressure drop in relation to the available static pressure provided by the pump, the resulting water flow rate will de reduced and the difference between entering and leaving water temperature of the hydronic module will be increased.

To reduce the pressure drops of the hydronic system, it is necessary:
- to reduce the individual pressure drops as much as possible (bends, level changes, accessories, etc.)
- to use a correctly sized piping diameter.
- to avoid hydronic system extensions, wherever possible.

9.2 - Pump pressure/flow rate curves

Single low-pressure pumps

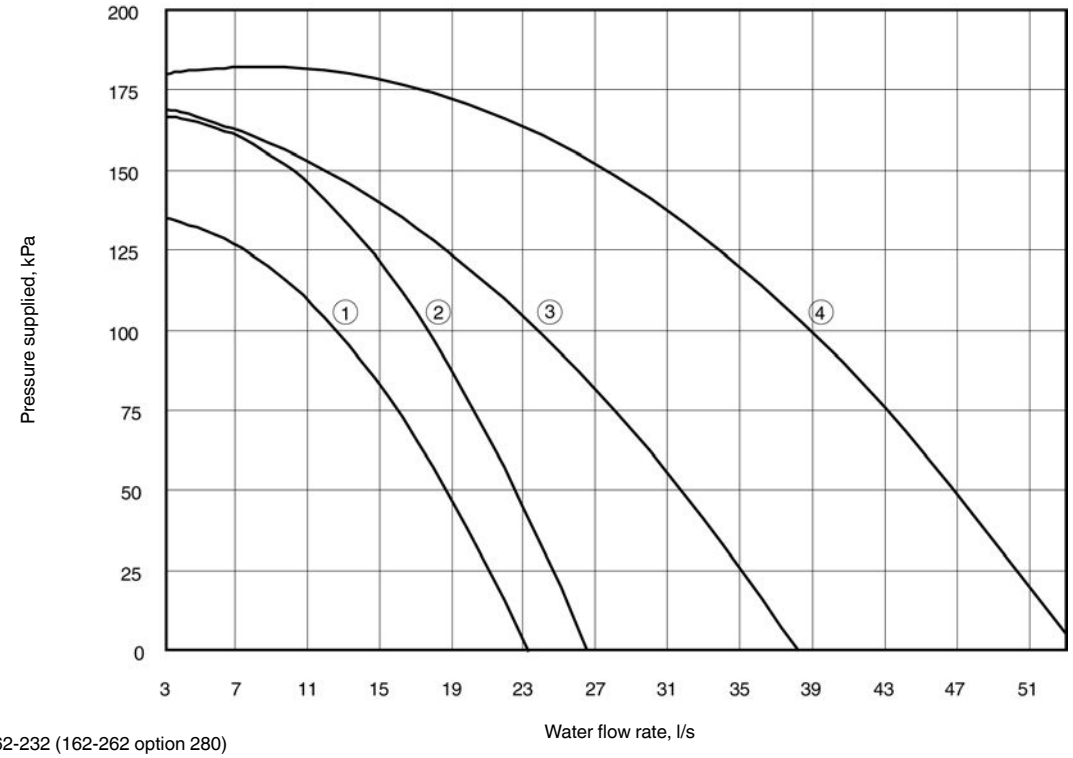

1 30 RB 162-232 (162-262 option 280)
2 30 RB 262-342
3 30 RB 372-402-432
4 30 RB 462-522

Double low-pressure pumps

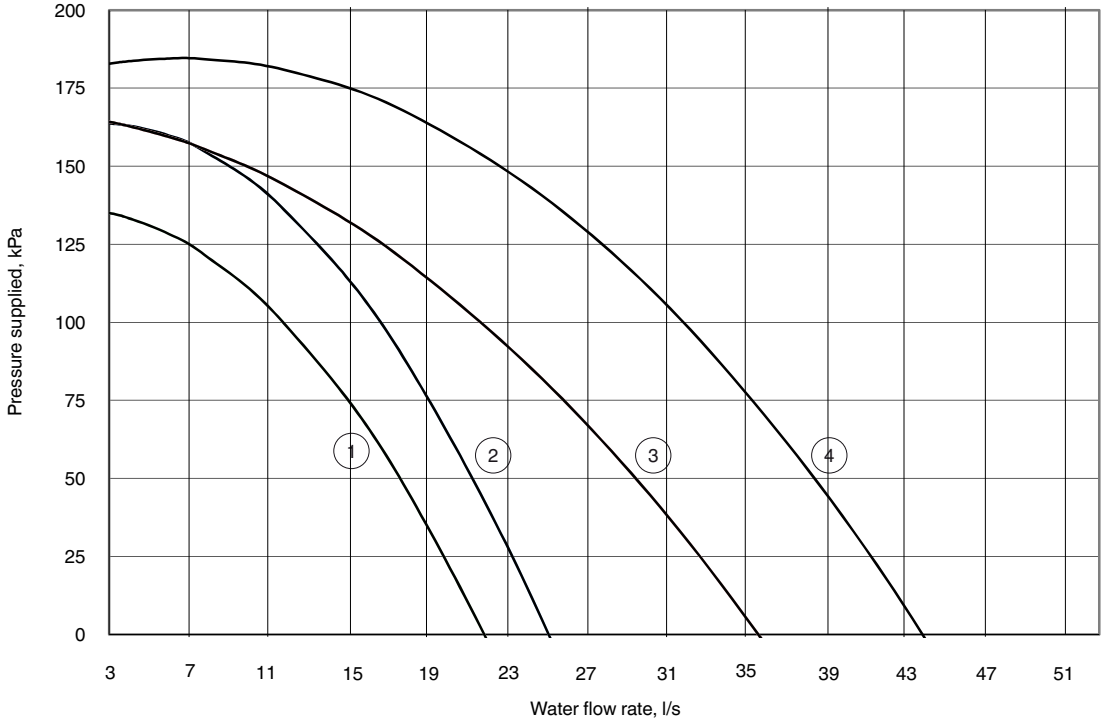

1 30RB 162-232 (162-262 option 280)
2 30RB 262-342
3 30RB 372-432
4 30RB 462-522

9.2 - Pump pressure/flow rate curves (continued)

Single high-pressure pumps

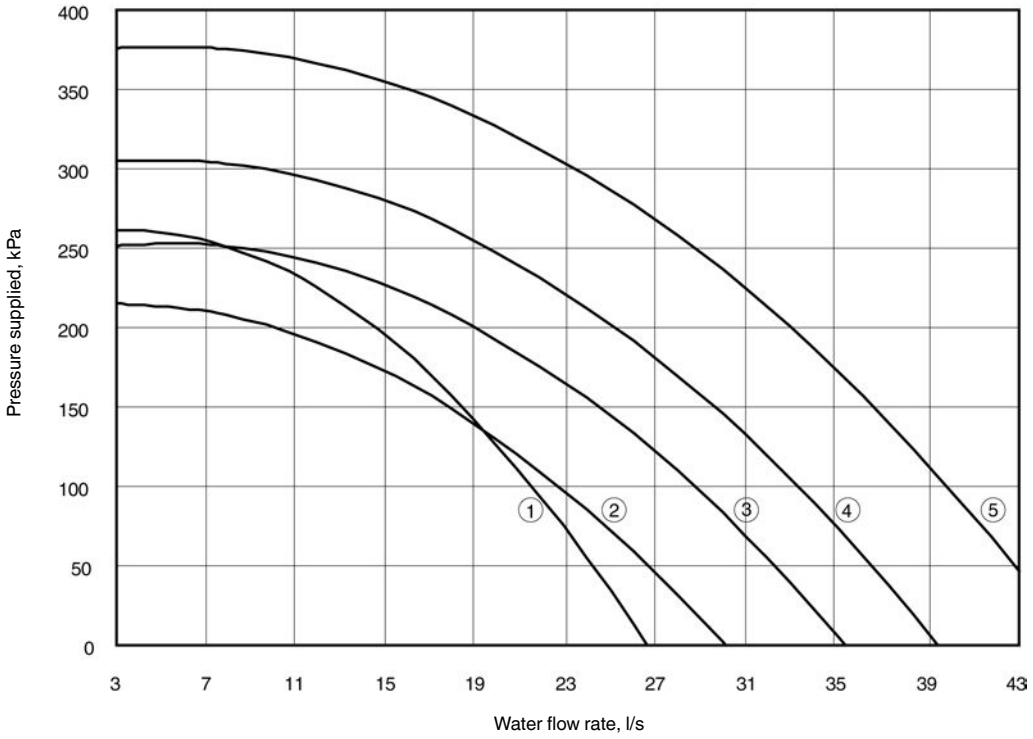

1 30RB 232-262
2 30RB 162-202
3 30RB 302-342
4 30RB 372-432
5 30RB 462-522

Double high-pressure pumps

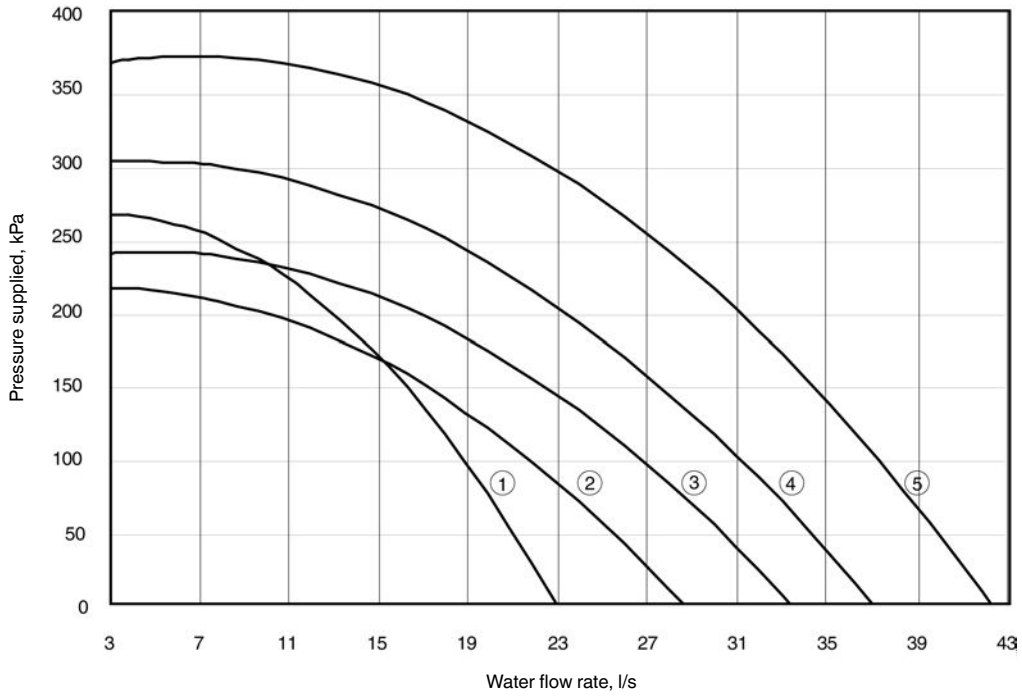

1 30RB 232-262
2 30RB 162-202
3 30RB 302-342
4 30RB 372-432
5 30RB 462-522

9.3 - Available static system pressure

9.3.1 - 30RB 162-262 “B” standard units

Single low-pressure pumps

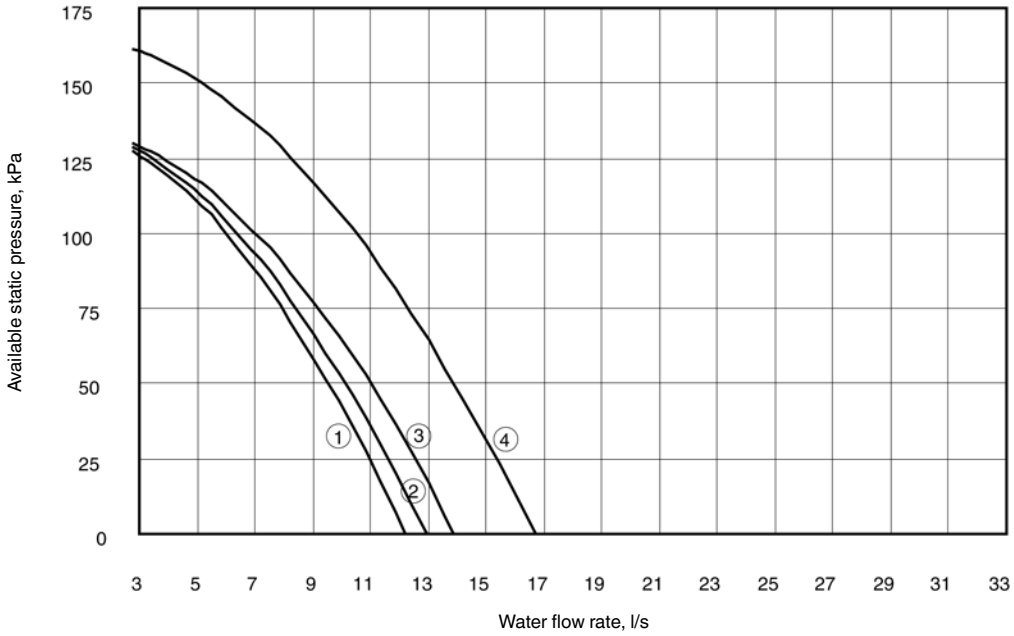

1 30RB 162-182B
2 30RB 202B
3 30RB 232B
4 30RB 262B

Double low-pressure pumps

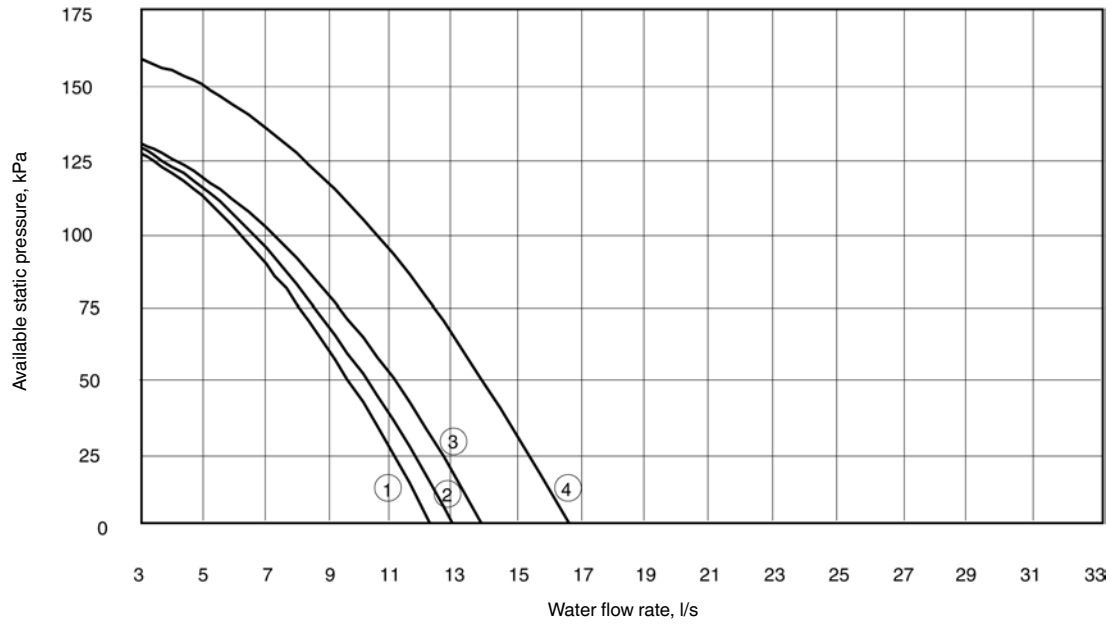

1 30RB 162-182B
2 30RB 202B
3 30RB 232B
4 30RB 262B

9.3.1 - 30RB 162-262 “B” standard units (continued)

Single high-pressure pumps

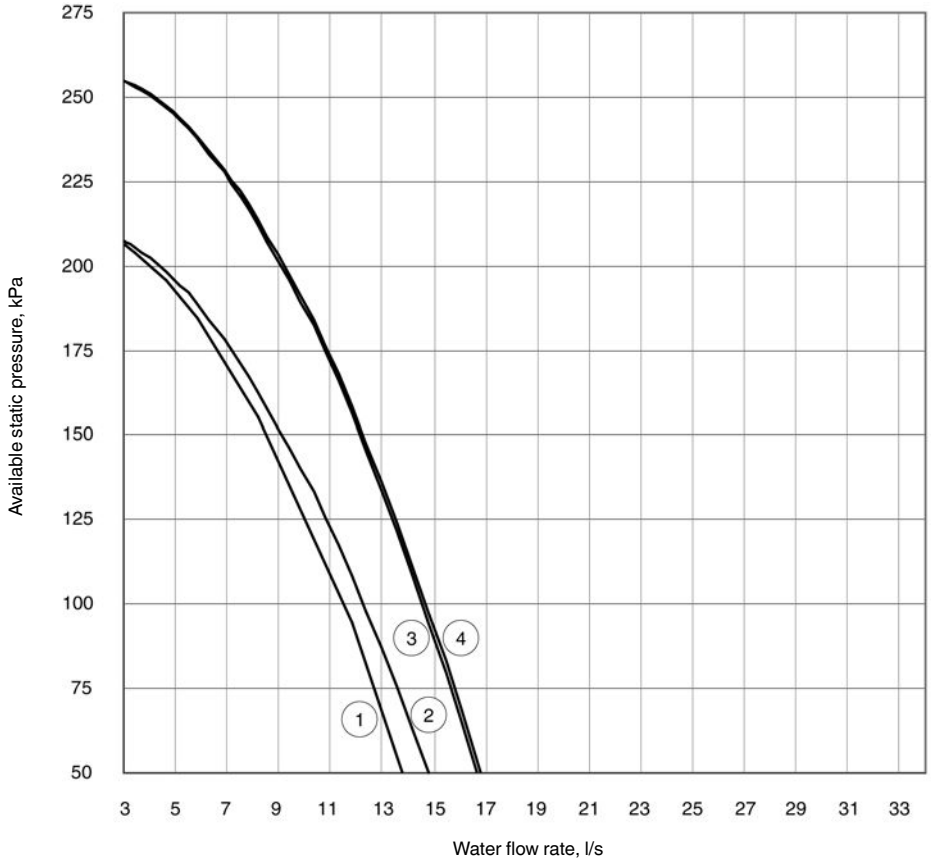

1 30RB 162-182B
2 30RB 202B
3 30RB 232B
4 30RB 262B

Double high-pressure pumps

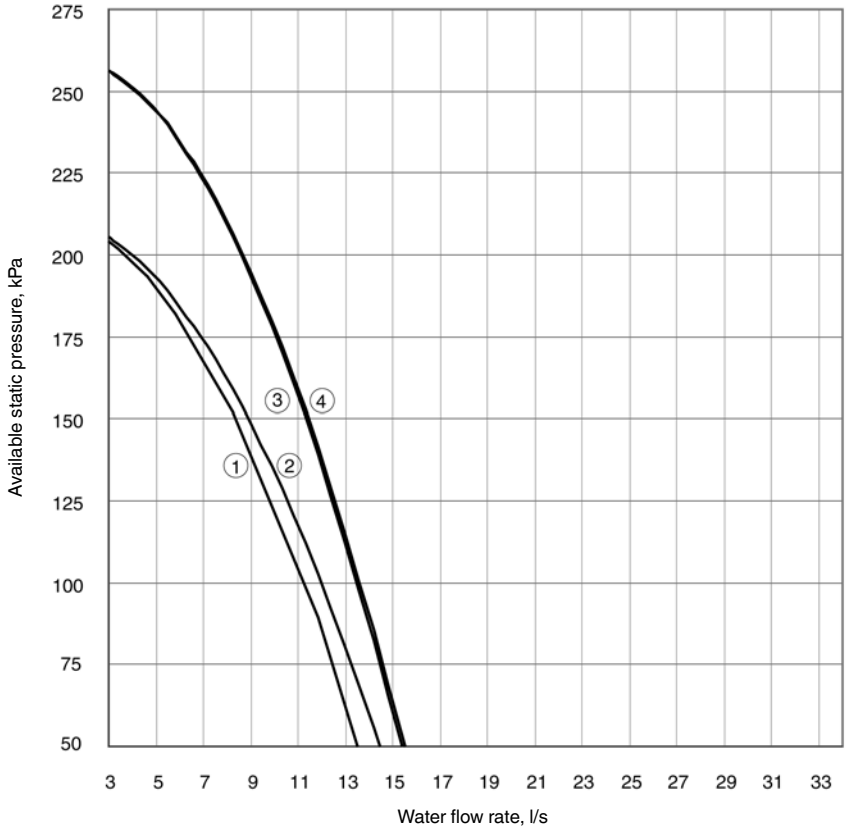

1 30RB 162-182B
2 30RB 202B
3 30RB 232B
4 30RB 262B

9.3 - Available static system pressure (continued)

9.3.2 - 30RB 162-262 “B” units with option 280 and 30RB 302-802 units

Single low-pressure pumps

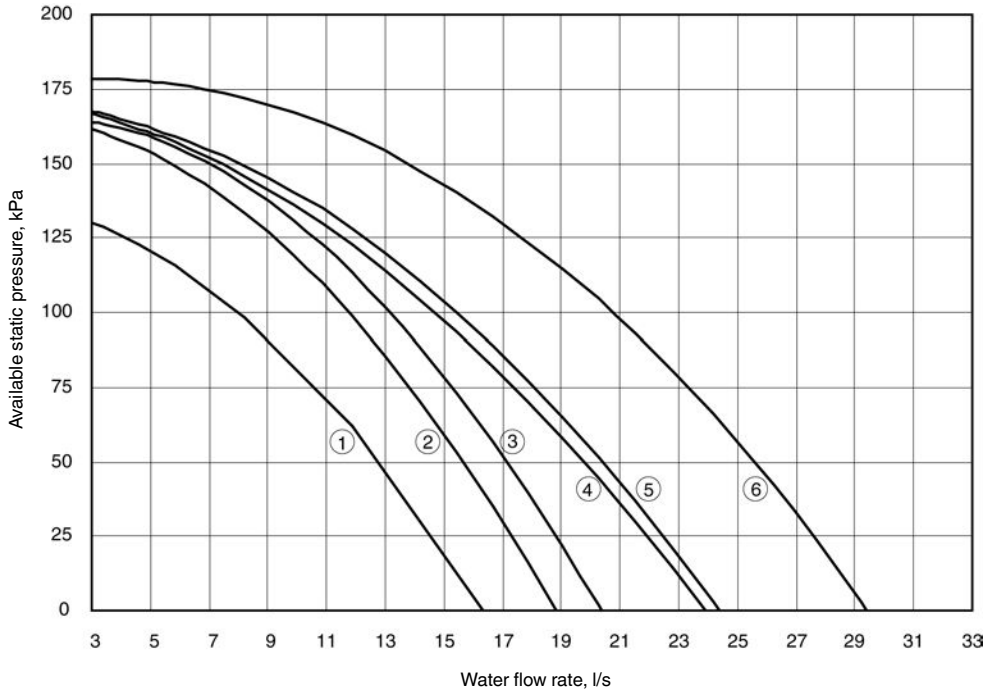

1 30RB162-262
2 30RB 302
3 30RB 342
4 30RB 372-402
5 30RB 432
6 30RB 462-522

Double low-pressure pumps

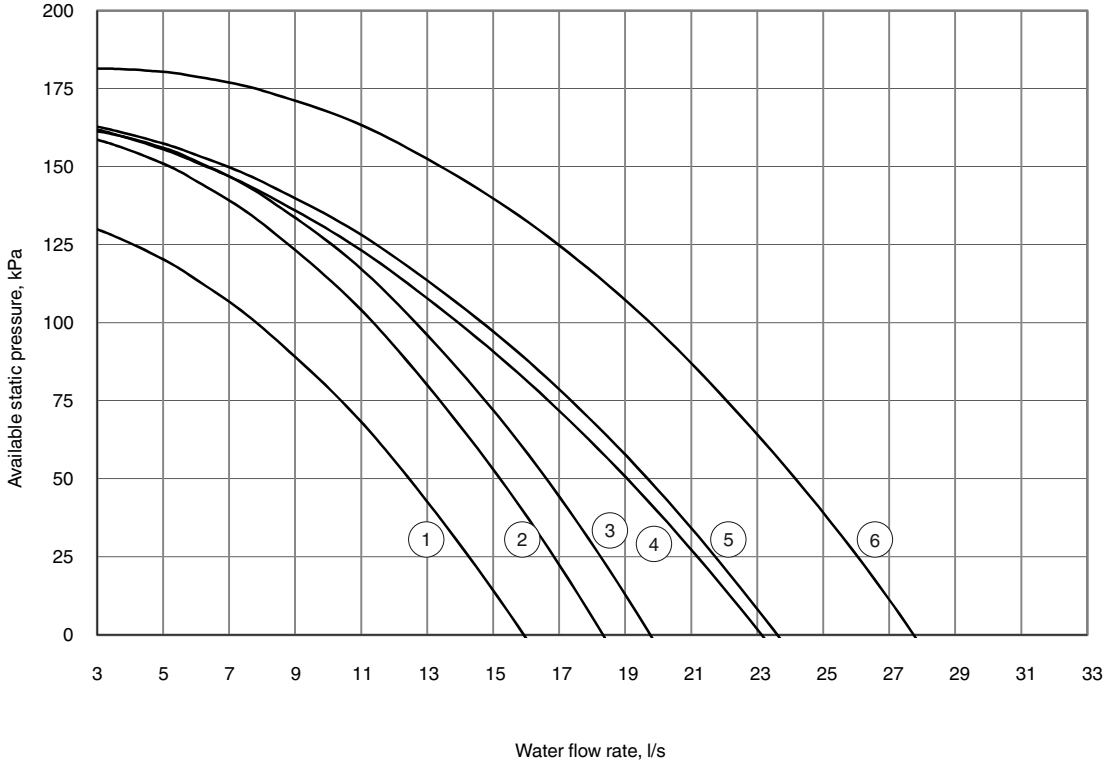

1 30RB162-262
2 30RB 302
3 30RB 342
4 30RB 372-402
5 30RB 432
6 30RB 462-522

9.3.2 - 30RB 162-262 “B” units with option 280 and 30RB 302-802 units (continued)

Single high-pressure pumps

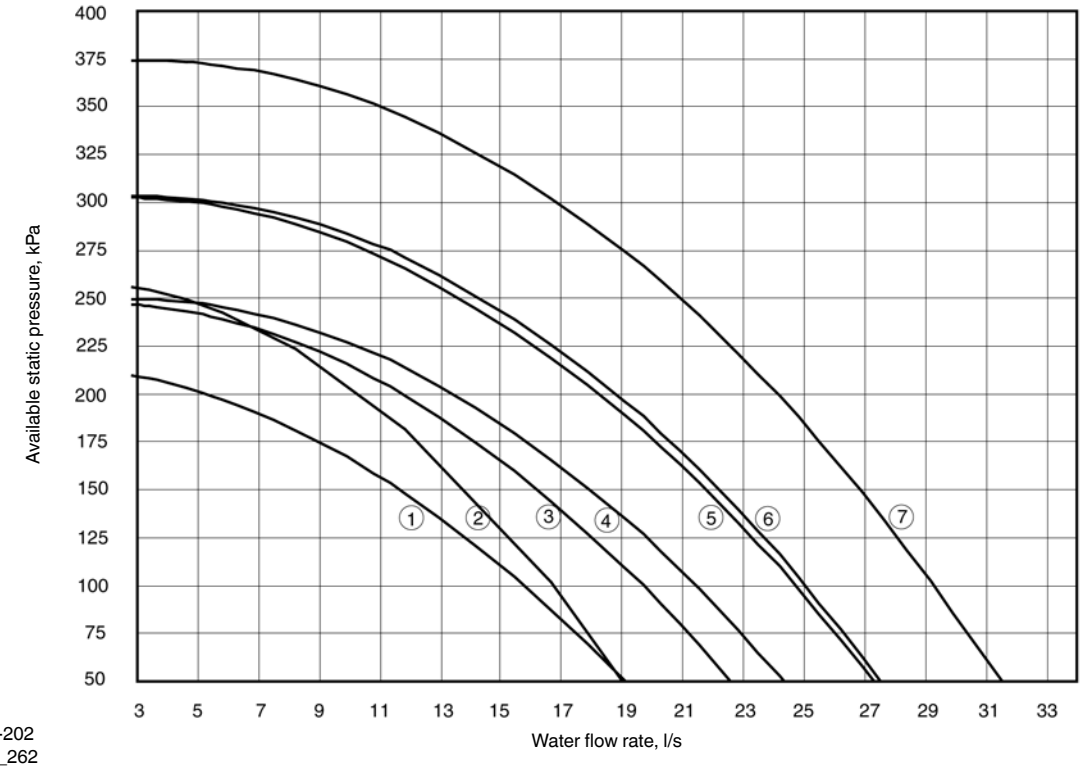

1 30RB 162-202
2 30RB 232_262
3 30RB 302
4 30RB 342
5 30RB 372-402
6 30RB 432
7 30RB 462-522

Double high-pressure pumps

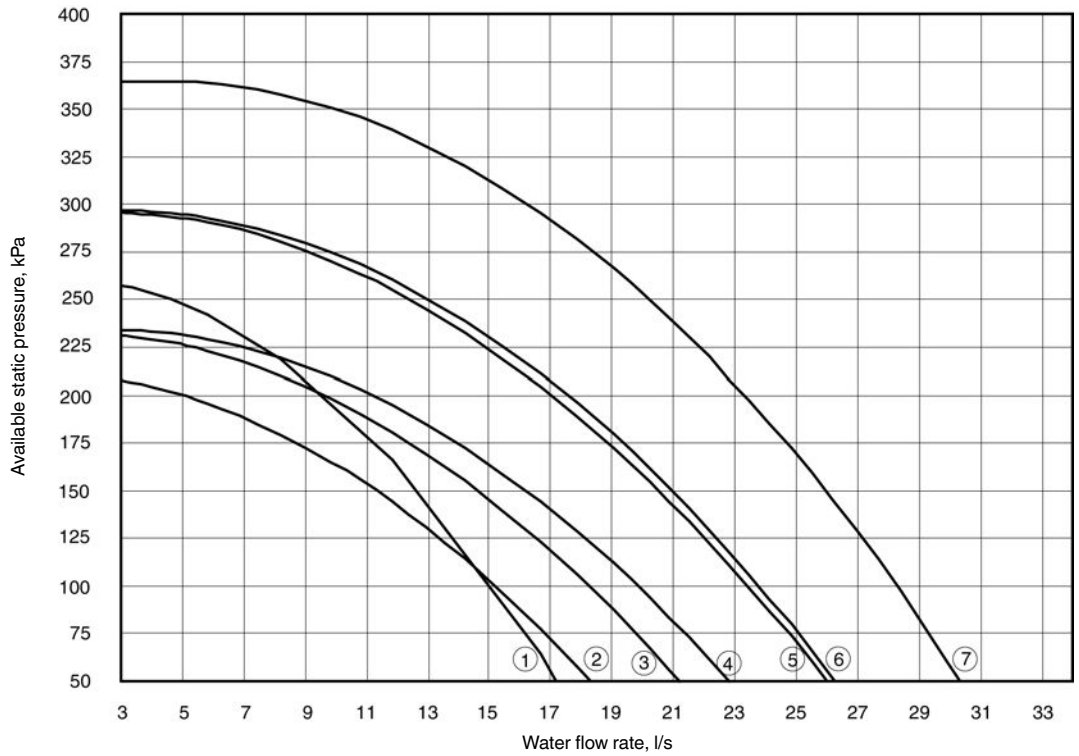

1 30RB 162-202
2 30RB 232_262
3 30RB 302
4 30RB 342
5 30RB 372-402
6 30RB 432
7 30RB 462-522

Note: For 30RB 162-262 units: Options 118A, 49, 50, 12, 6 and 241 are only available with option 280.

10 - MAJOR SYSTEM COMPONENTS

10.1 - Compressors

30RB units use hermetic scroll compressors. Each compressor is equipped with a crankcase oil heater, as standard, complete with a safety device that prevents compressor start-up if there is a fault at the heater.

As standard, each compressor is equipped with a discharge valve for the whole range and with a suction valve for units 30RB 162-262.

Each compressor sub-function is equipped with:
- Anti-vibration mountings between the unit chassis and the chassis of the compressor sub-function.
- Suction piping equipped with openings (not visible) to ensure an even oil level between all compressors.
- A pressure safety switch at the discharge line of each circuit.

10.2 - Lubricant

The compressors installed in these units have an oil charge of 6.7 l to ensure their correct operation.

The oil level check must be done with the unit switched off, when then suction and discharge pressures are equalised. The level must be full (higher than or equal to 3/4 of the sight-glass) after two hours shut-down. If this is not the case, there is an oil leak in the circuit. Search and repair the leak, then recharge oil, so that it reaches a high sight glass level, when the unit is recharged with refrigerant. The refrigerant dissolved in the oil raises the level - do not add any more oil.

ATTENTION: Too much oil in the circuit can cause a unit defect.

NOTE: Use only oils which have been approved for the compressors. Never use oils which have been exposed to air.

CAUTION: R-22 oils are absolutely not compatible with R-410A oils and vice versa.

10.3 - Condensers

The 30RB coils are micro-channel condensers made entirely of aluminium. For some options (see chapter 11.7 - Other options and accessories) optional coils with internally grooved copper tubes with aluminium fins are also available.

10.4 - Fans

The fans are axial Flying Bird fans equipped with rotating shroud and made of composite recyclable material. Each motor is fixed with transverse supports. The motors are three-phase, with permanently lubricated bearings and insulation class F.

10.5 - Electronic expansion valve (EXV)

The EXV is equipped with a stepper motor (2785 to 3690 steps, depending on the model) that is controlled via the EXV board. It is also equipped with a sight-glass that permits verification of the mechanism movement and the presence of the liquid gasket.

10.6 - Moisture indicator

Located on the EXV, permits control of the unit charge and indicates moisture in the circuit. The presence of bubbles in the sight-glass indicates an insufficient charge or non-condensables in the system. The presence of moisture changes the colour of the indicator paper in the sight-glass.

10.7 - Filter drier

The role of the filter drier is to keep the circuit clean and moisture-free. The moisture indicator shows, when it is neces-sary to change the element. A difference in temperature between the filter inlet and outlet shows that the element is dirty.

10.8 - Evaporator

10.8.1 - 30RB 162-262 “B” standard units
The evaporator is a plate heat exchanger with refrierant circuits. The water connections of the heat exchanger are Victaulic connections.

The evaporator has a thermal insulation of 19 mm thick polyurethane foam. As an option it can be protected against frost (option 41: evaporator frost protection).

The products that may be added for thermal insulation of the containers during the water piping connection procedure must be chemically neutral in relation to the materials and coatings to which they are applied. This is also the case for the products originally supplied by Carrier.

NOTES: Monitoring during operation:
- ***Follow the regulations on monitoring pressurised equipment.***
- ***It is normally required that the user or operator sets up and maintains a monitoring and maintenance file.***
- ***Follow the control programmes of EN 378-2, annexe D.***
- ***If they exist follow local professional recommendations.***
- ***Regularly check for possible presence of impurities (e.g. silicon grains) in the heat exchange fluids. These impurities maybe the cause of the wear or corrosion by puncture.***
- ***The reports of periodical checks by the user or operator must be included in the supervision and maintenance file.***

10.8.2 - 30RB 162-262 "B" with option 280 and 30RB 302-802
The evaporator is a shell-and-tube type with two or three refrigerant circuits. It has been tested and stamped in accordance with applicable pressure codes for a maximum operating pressure of 2910 kPa refrigerant-side and 1000 kPa water-side. The seamless copper tubes are finned on the refrigerant side and expanded into the tube sheets. The water connection of the heat exchanger is a Victaulic connection.

The evaporator shell has a thermal insulation of 19 mm thick polyurethane foam, and is equipped with a water drain and purge. An option with an aluminium jacket is also available.

As an option the evaporator is available with frost protection (option 41: evaporator frost protection).

The products that may be added for thermal insulation of the containers during the water piping connection procedure must be chemically neutral in relation to the materials and coatings to which they are applied. This is also the case for the products originally supplied by Carrier.

NOTES: Monitoring during operation, re-qualification, re-testing and re-testing dispensation:
- ***Follow the regulations on monitoring pressurised equipment.***
- ***It is normally required that the user or operator sets up and maintains a monitoring and maintenance file.***
- ***Follow the control programmes of EN 378-2, annexes A, B, C and D.***
- ***If they exist follow local professional recommendations.***
- ***Regularly inspect the condition of the coating (paint) to detect blistering resulting from corrosion. To do this, check a non-insulated section of the container or the rust formation at the insulation joints.***
- ***Regularly check for possible presence of impurities (e.g. silicon grains) in the heat exchange fluids. These impurities maybe the cause of the wear or corrosion by puncture.***
- ***Filter the heat exchange fluid check and carry out internal inspections as described in EN 378-2, annex C.***
- ***In case of re-testing take possible maximum pressure differences, as indicated in (2) above into consideration.***
- ***The reports of periodical checks by the user or operator must be included in the supervision and maintenance file.***

Repair
Any repair or modification, including the replacement of moving parts:
- ***must follow local regulations and be made by qualified operators and in accordance with qualified procedures, including changing the heat exchanger tubes***
- ***must be made in accordance with the instructions of the original manufacturer. Repair and modification that necessitate permanent assembly (soldering, welding, expanding etc.) must be made using the correct procedures and by qualified operators.***
- ***An indication of any modification or repair must be shown in the monitoring and maintenance file.***

Recycling
The unit is wholly or partly recyclable. After use it contains refrigerant vapours and oil residue. It is coated by paint.

Operating life
This unit is designed for:
- ***prolonged storage of 15 years under nitrogen charge with a temperature difference of 20 K per day.***
- ***452000 cycles (start-ups) with a maximum difference of 6 K between two neighbouring points in the container, based on 6 start-ups per hour over 15 years at a usage rate of 57%.***

Excess corrosion thickness
Gas side: 0 mm
Heat exchange fluid side: 1 mm for tubular plates in lightly alloyed steels, 0 mm for stainless steel plates or plates with copper-nickel or stainless steel protection.

10.9 - Refrigerant

30RB units operate with refrigerant R-410A.

10.10 - High-pressure safety switch

30RB units are equipped with high-pressure safety switches with automatic reset. These pressure switches are located at the discharge of each circuit.

10.11 - Fan arrangement

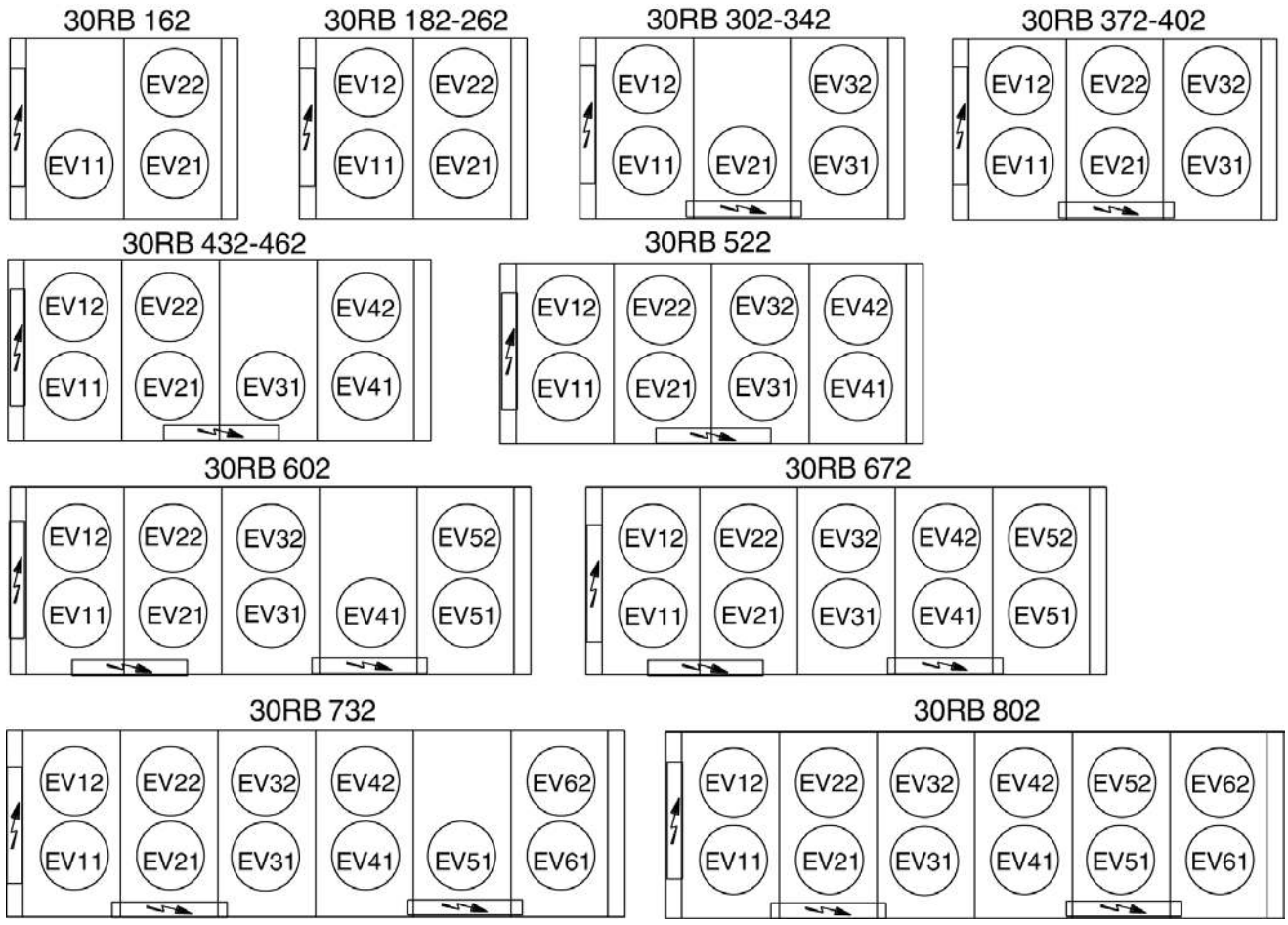

10.12 - Fan stages

Standard unit 30RB	Circuit	Stage 1	Stage 2	Stage 3	Stage 4	Option 28 with variator	Option 28B with two-speed fan
162	A	EV11	EV11			EV11	EV11
	B	EV12	EV21 + EV22			EV21	EV21
182-262	A	EV11	EV11 + EV12			EV11	EV11
	B	EV21	EV21 + EV22			EV21	EV21
302-342	A	EV11	EV11 + EV21	EV11+ EV21+ EV12		EV11	EV11
	B	EV31	EV31 + EV32			EV31	EV31
372-402	A	EV11	EV11 + EV12	EV11 + EV12 + EV21		EV11	EV11
	B	EV31	EV31 + EV32	EV31 + EV32 + EV22		EV31	EV31
432-462	A	EV11	EV11 + EV21	EV11 + EV21 + EV12	EV11 + EV21 + EV12 + EV22	EV11	EV11
	B	EV41	EV41 + EV31	EV41 + EV31 + EV42		EV41	EV41
522	A	EV11	EV11 + EV21	EV11 + EV21 + EV12	EV11 + EV21 + EV12 + EV22	EV11	EV11
	B	EV31	EV31 + EV41	EV31 + EV41 + EV32	EV31 + EV41 + EV32 + EV42	EV31	EV31
602	A	EV11	EV11 + EV12	EV11 + EV12 + EV21		EV11	EV11
	B	EV31	EV31 + EV32	EV31 + EV32 + EV22		EV31	EV31
	C	EV51	EV51 + EV41	EV51 + EV41 + EV52		EV51	EV51
672	A	EV11	EV11 + EV12	EV11 + EV12 + EV21		EV11	EV11
	B	EV31	EV31 + EV32	EV31 + EV32 + EV22		EV31	EV31
	C	EV41	EV41 + EV51	EV41 + EV51 + EV42	EV41 + EV51 + EV42 + EV52	EV41	EV41
732	A	EV11	EV11 + EV21	EV11 + EV21 + EV12	EV11 + EV21 + EV12 + EV22	EV11	EV11
	B	EV31	EV31 + EV41	EV31 + EV41 + EV32	EV31 + EV41 + EV32 + EV42	EV31	EV31
	C	EV61	EV61 + EV51	EV61 + EV51 + EV62		EV61	EV61
802	A	EV11	EV11 + EV21	EV11 + EV21 + EV12	EV11 + EV21 + EV12 + EV22	EV11	EV11
	B	EV31	EV31 + EV41	EV31 + EV41 + EV32	EV31 + EV41 + EV32 + EV42	EV31	EV31
	C	EV51	EV51 + EV61	EV51 + EV61 + EV52	EV51 + EV61 + EV52 + EV62	EV51	EV51

11 - OPTIONS AND ACCESSORIES

11.1 - Free-cooling system (option 118A)

30RB option 118A		232	262	302	342	372	402	432	462	522
Operating weight*										
Unit with option 15	kg	2398	2580	3229	3429	3518	3658	4241	4381	4591
Unit with option 15 + dual-pump hydronic module option	kg	2638	2818	3539	3739	3868	3998	4591	4781	5011
Standard unit	kg	2208	2390	2999	3199	3268	3398	3951	4091	4281
Refrigerant										
Circuit A	kg	29	29	42.5	44	45.5	46	55	57	57
Circuit B	kg	29	29	31	31	45.5	46	47	47	57

* Weight shown is a guideline only.

11.1.1 - Operating limits

Cooling mode			
Evaporator		**Minimum**	**Maximum**
Entering water temperature at start-up	°C	6.8	40
Leaving water temperature during operation	°C	5	15
Condenser (air)		**Minimum**	**Maximum**
Outdoor ambient temperature	°C	0	48
Available static pressure	Pa	0	0
Ambient temperature (option 28)	°C	-20	48
Free-cooling mode			
Evaporator		**Minimum**	**Maximum**
Entering water temperature at start-up	°C	6.8	40
Leaving water temperature during operation	°C	5	26
Condenser (air)		**Minimum**	**Maximum**
Outdoor ambient operating temperature	°C	-25	20
Available static pressure	Pa	0	0

11.1.2 - Operation

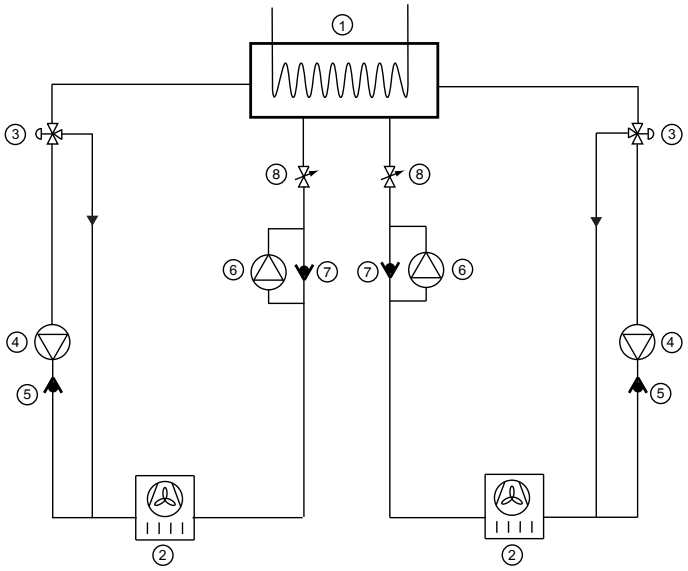

Legend

1. Evaporator
2. Air condenser (coils)
3. Three-way valve
4. Compressor
5. Check valve
6. Refrigerant pump
7. Check valve
8. Expansion device (EXV)

The change-over between the cooling and free-cooling modes is automatically controlled (it is possible to block the change-over to free-cooling by reconfiguring the machine - see Controls IOM). The configurable parameters permitting change-over are the outside air temperature and the leaving water temperature set-point. As soon as the temperature difference LWT_{stp} - OAT is above 8 K the current capacity in cooling mode is calculated and compared with the theoretical free-cooling capacity. This comparison authorizes/stops the change-over to free-cooling.

After change-over to free-cooling all compressors are stopped (the compressor functions are bypassed). As soon as the valves open, the free-cooling pumps are started. This change-over logic takes around 10 minutes. Taking this timing into consideration only one change-over cooling - free-cooling is authorized per hour.

If the capacity supplied in the free-cooling mode is insufficient (set-point not reached), the unit automatically changes over to cooling mode.

To optimize operation in free-cooling mode we strongly recommend to use the set-point offset function. This favours the change-over to free-cooling and increases the capacity in free-cooling mode.

11.2 - Total heat reclaim (option 50)

11.2.1 - Physical data for 30RB units with total heat reclaim condenser option

30RB option 50		262*	262**	302	342	372	402	432	462	522
Operating weight***										
Unit with heat reclaim option	kg	2340	2610	3200	3420	3480	3610	4290	4430	4620
Unit with heat reclaim option and option 15	kg	-	2800	3440	3660	3740	3870	4590	4730	4930
Condenser		Shell-and-tube condenser with finned copper tubes								
Water volume	l	22	22	22	22	22	22	46	46	46
Max. water-side operating pressure	kPa	1000	1000	1000	1000	1000	1000	1000	1000	1000
Water connections		Victaulic								
Connection	in.	3	3	3	3	3	3	4	4	4
Outside diameter	mm	88.9	88.9	88.9	88.9	88.9	88.9	114.3	114.3	114.3

* Standard coil ** Copper/aluminium coil (option 254) *** Weight shown is a guideline only.

11.2.2 - Dimensions, clearances, weight distribution

30RB 262 - Total heat reclaim condenser option

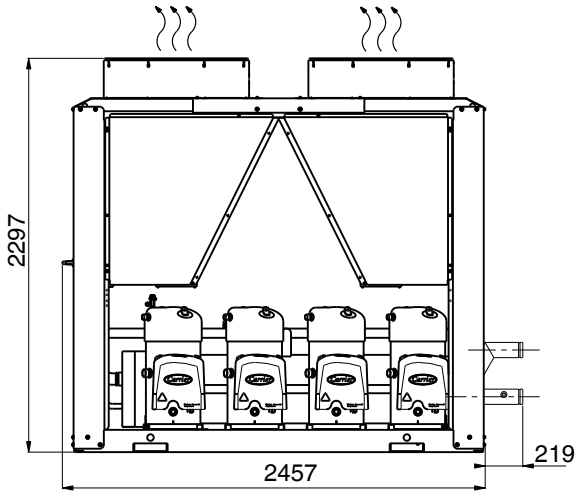

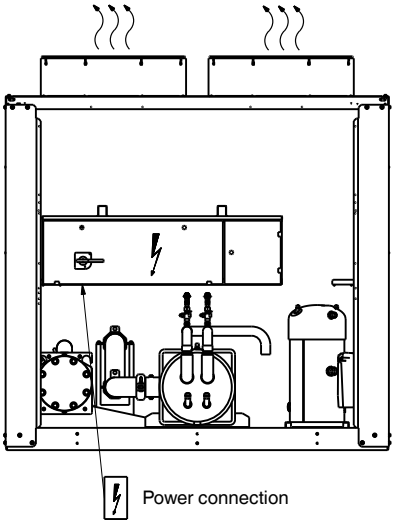

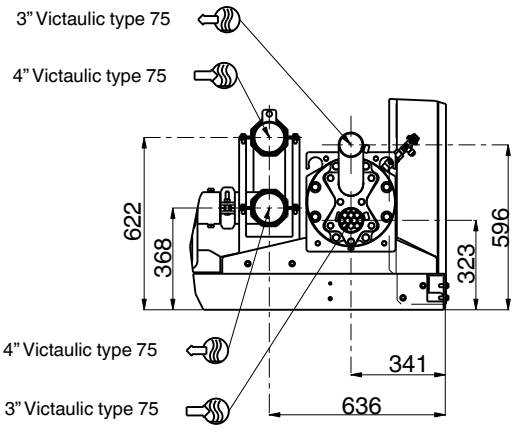

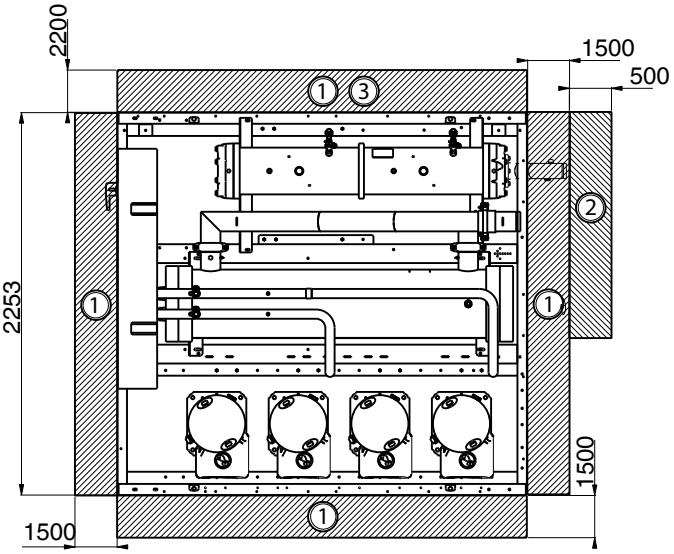

Legend:

All dimensions are in mm.

① Clearances required for maintenance and air flow

② Clearances recommended for evaporator tube removal

③ Clearances recommended for heat exchanger removal

Water inlet

Water outlet

Air outlet, do not obstruct

Control box

NOTE: Non-contractual drawings.

When designing an installation, refer to the certified dimensional drawings, available on request.

For the positioning of the fixing points, weight distribution and centre of gravity coordinates.

ATTENTION: The Victaulic flange sleeves of the condenser are not installed, but supplied with the unit. The temperature sensors and the condenser flow switch are in the control box and wired. After connecting the Victaulic flange sleeves, the temperature sensors must be installed, as well as the water flow switch which must be located in the condenser outlet.

30RB 302-402 - Total heat reclaim condenser option

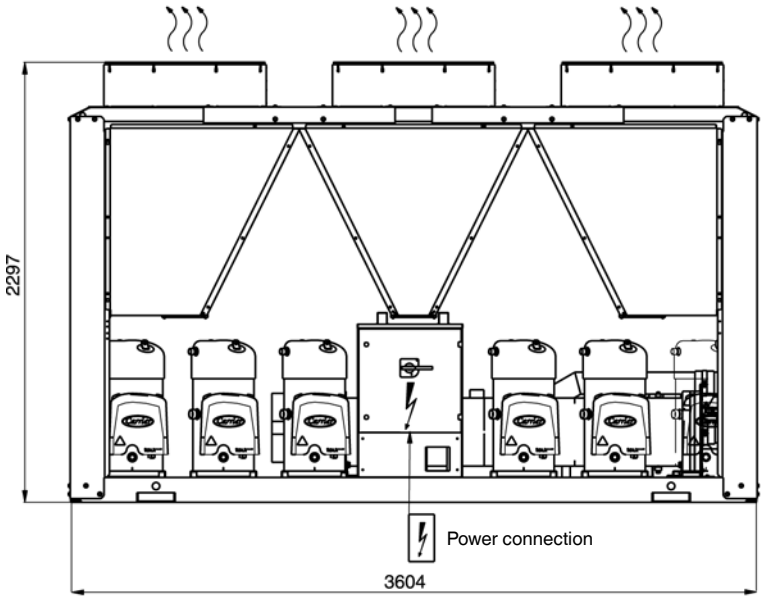

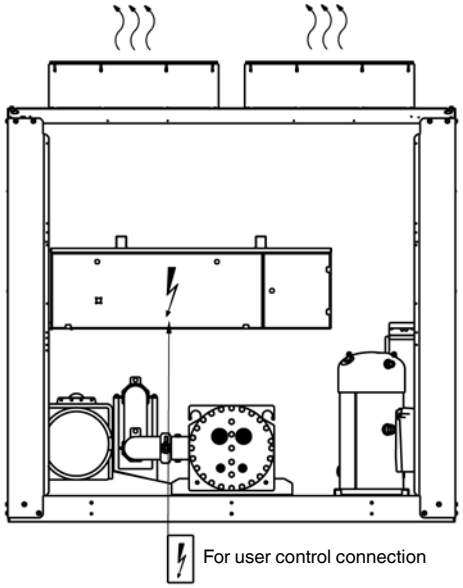

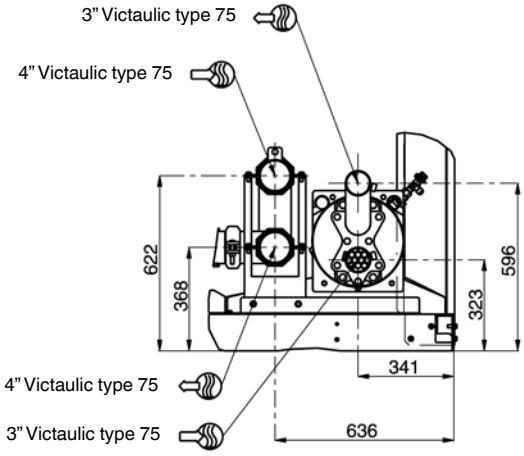

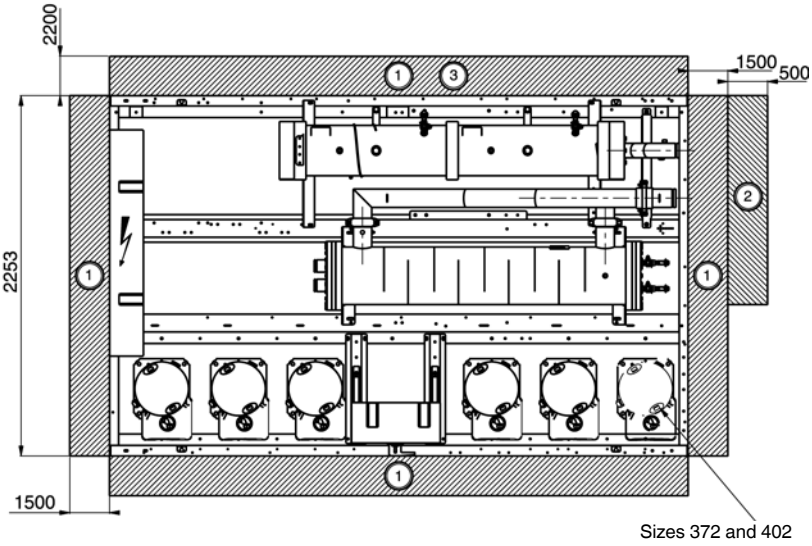

Legend:

All dimensions are in mm.

(1) Clearances required for maintenance and air flow

(2) Clearances recommended for evaporator tube removal

(3) Clearances recommended for heat exchanger removal

Water inlet

Water outlet

Air outlet, do not obstruct

Control box

NOTE: Non-contractual drawings.

When designing an installation, refer to the certified dimensional drawings, available on request.

For the positioning of the fixing points, weight distribution and centre of gravity coordinates.

ATTENTION: The Victaulic flange sleeves of the condenser are factory-installed.

30RB 432-522 - Total heat reclaim condenser option

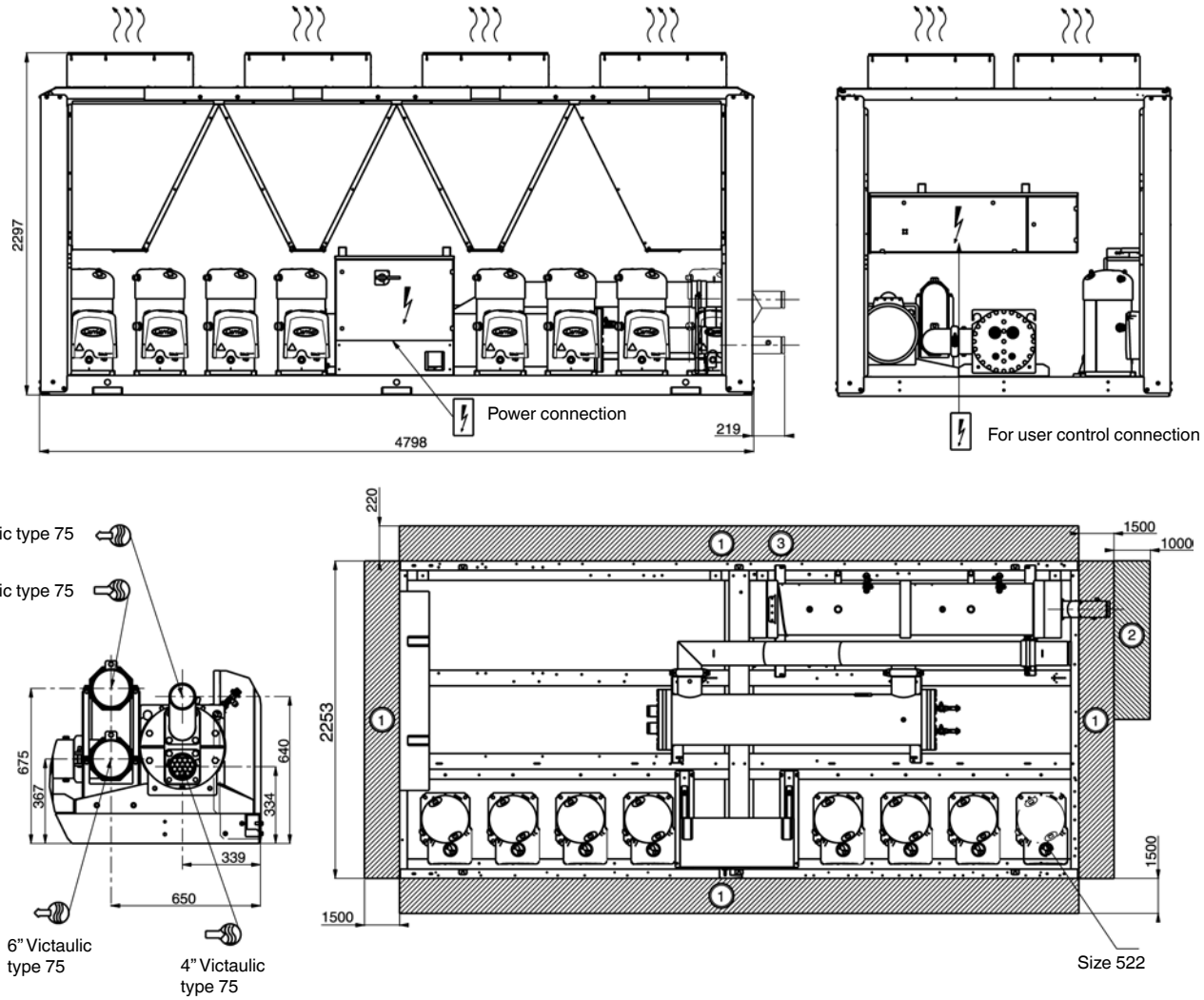

Legend:

All dimensions are in mm.

(1) Clearances required for maintenance and air flow

(2) Clearances recommended for evaporator tube removal

(3) Clearances recommended for heat exchanger removal

Water inlet

Water outlet

Air outlet, do not obstruct

Control box

ATTENTION: The Victaulic flange sleeves of the condenser are not installed, but supplied with the unit. The temperature sensors and the condenser flow switch are in the control box and wired. After connecting the Victaulic flange sleeves, the temperature sensors must be installed, as well as the water flow switch which must be located in the condenser outlet.

NOTE: Non-contractual drawings.

When designing an installation, refer to the certified dimensional drawings, available on request.

For the positioning of the fixing points, weight distribution and centre of gravity coordinates.

11.2.3 - Condenser water connection

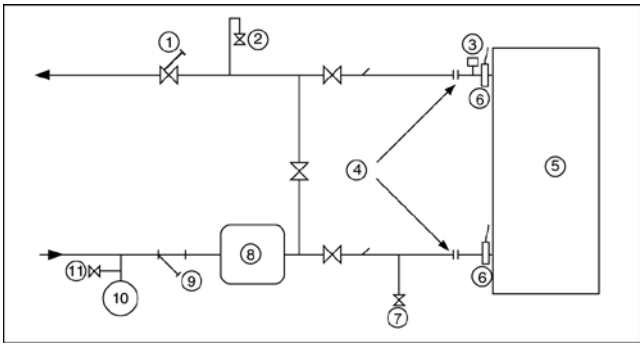

Legend

1 Control valve
2 Air vent
3 Flow switch for the condenser (supplied)
4 Flexible connection
5 Condenser
6 Temperature sensor (supplied)
7 Drain
8 Buffer tank (if needed)
9 Filter (mesh size: 1.2 mm = 20 mesh)
10 Expansion tank
11 Fill valve

11.2.4 - Operating limits

Heat reclaim condenser		Minimum	Maximum
Entering water temperature at start-up	°C	15	55
Leaving water temperature during operation	°C	20	55
Condenser (air)		**Minimum**	**Maximum**
Outdoor ambient operating temperature	°C	0*	46
Available static pressure	Pa	0	0

* The minimum outside temperature for heat reclaim mode is 0°C in cooling mode and -20°C with the 'winter operation' option.

The water entering temperature at start-up must not fall below 15°C. For installations with a lower temperature an accessory 3-way valve must be installed.

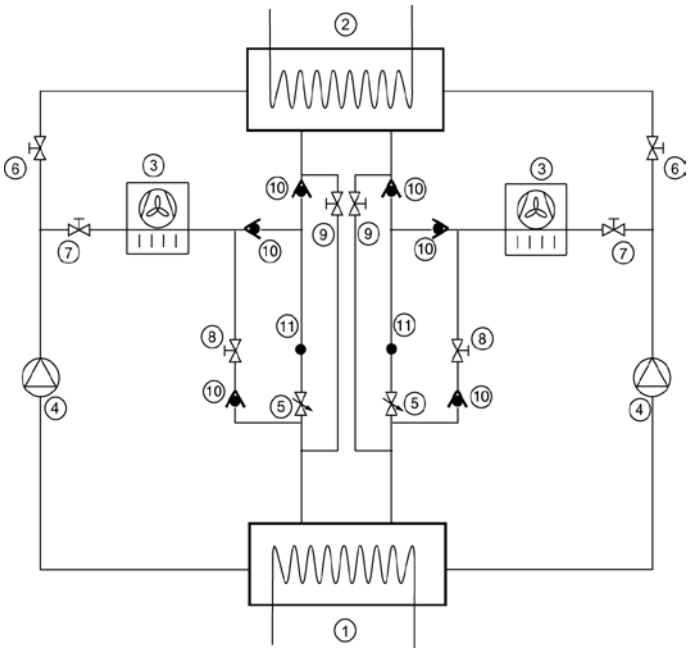

Legend
1 Evaporator
2 Heat reclaim condenser
3 Air condenser (coils)
4 Compressor
5 Expansion device (EXV)
6 Solenoid valve: heat reclaim mode
7 Solenoid valve: cooling mode
8 Solenoid valve: charge recovery in heat reclaim mode
9 Solenoid valve: charge recovery in cooling mode
10 Check valve
11 Pressure and temperature measurement to calculate the liquid subcooling to optimise the charge recovery

11.2.5 - Flow control

A flow switch on the condenser is factory-installed. The condenser loop is protected against a flow rate that is too low. Output 16 of the additional board of this option allows control of the condenser pump operation that will start up after the unit has started.

If the flow rate is too low:
- changeover to the heat reclaim mode is not permitted,
- immediate changeover to cooling mode when the flow rate is too low and the unit operates in heat reclaim mode.

11.2.6 - Heat reclaim operation

The heat reclaim condenser option is only available on units with two circuits. It was designed with a shell-and-tube two-circuit heat exchanger with the coils in parallel.

The two circuits are independently controlled. This means that one circuit can be in cooling mode and the other in heat reclaim mode. This permits two stable control stages (100% if the circuits are in heat reclaim mode, and approximately 50% based on the size of the circuit in operation). The intermediate stages are obtained by cycling between the air condenser mode and the heat reclaim mode.

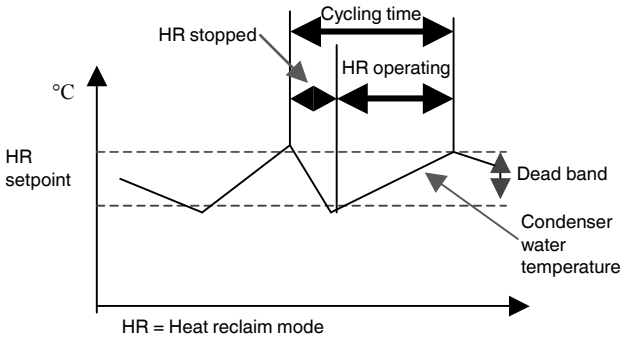

This cycling will lead to a water temperature change in the condenser loop of the heat reclaim condenser. Based on the stability required, the water loop must be more or less significant.

Stability	Volume
2°C	40 l/kW*
3°C	30 l/kW*
4°C	20 l/kW*
5°C	15 l/kW*

* kW: cooling mode capacity
The number of cycles is limited to 4 per hour

Please refer to the 30RB controls manual for more information on the control logic of the condenser loop.

11.2.7 - Frost protection

The water condenser is protected by electric heaters. The algorithm is based on the outside temperature. However, the condenser connection pipes are not protected. It is recommended to add pipe protection at the time of installation (glycol, heat insulation, heaters etc.). If the pumps are ordered by unit, the water condenser is also protected by a pump control algorithm that ensures water flow at water temperatures that are too low. If the pumps are not ordered by unit, it is recommended to ensure water flow at outside temperatures that are too low.

11.3 - Partial heat reclaim using desuperheaters (option 49)

This option permits the production of free hot water using heat reclaim by desuperheating the compressor discharge gases. The option is available for the whole 30RB range.

A plate heat exchanger is installed in series with the air condenser coils on the compressor discharge line of each circuit.

The control configuration for the desuperheater option is factory assembled (see chapter 11.3.6 - Control configuration).

11.3.1 - Physical data, 30RB units with partial heat reclaim using desuperheaters (option 49)

30RB option 49		162	182	202	232	262	302	342	372	402	432	462	522	602	672	732	802
Operating weight*																	
Standard unit**	kg	1882	1974	2074	2092	2260	2853	3049	3092	3218	3755	3895	4063	5285	5484	6145	6315
Unit with options***	kg	2052	2154	2244	2282	2450	3083	3279	3342	3478	4045	4185	4373	5645	5833	6555	6745
Unit with options****	kg	2302	2404	2484	2522	2690	3393	3589	3692	3818	4395	4585	4795	-	-	-	-
Desuperheater in circuits A/B/C		Plate heat exchangers															
Water volume circuit A	l	1.75	1.75	1.75	3.75	3.75	5.5	5.5	5.5	5.5	7.5	7.5	7.5	5.5	5.5	7.5	7.5
Water volume circuit B	l	3.5	3.5	3.5	3.75	3.75	3.75	3.75	5.5	5.5	5.5	5.5	7.5	5.5	5.5	7.5	7.5
Water volume circuit C	l	-	-	-	-	-	-	-	-	-	-	-	-	5.5	7.5	5.5	7.5
Max. water-side operating pressure	kPa	1000	1000	1000	1000	1000	1000	1000	1000	1000	1000	1000	1000	1000	1000	1000	1000
Water connections		Cylindrical, male gas thread															
Connection	in	2	2	2	2	2	2	2	2	2	2	2	2	2	2	2	2
Outside diameter	mm	60.3	60.3	60.3	60.3	60.3	60.3	60.3	60.3	60.3	60.3	60.3	60.3	60.3	60.3	60.3	60.3

* Weights shown are a guideline only
** Standard unit (with MCHX coils) and desuperheater option
*** Unit with option 15 + desuperheater
**** Unit with option 15 + desuperheater + hydronic module with high-pressure dual pump

11.3.2 - Dimensional drawings for units equipped with the desuperheater option

30RB 162-262

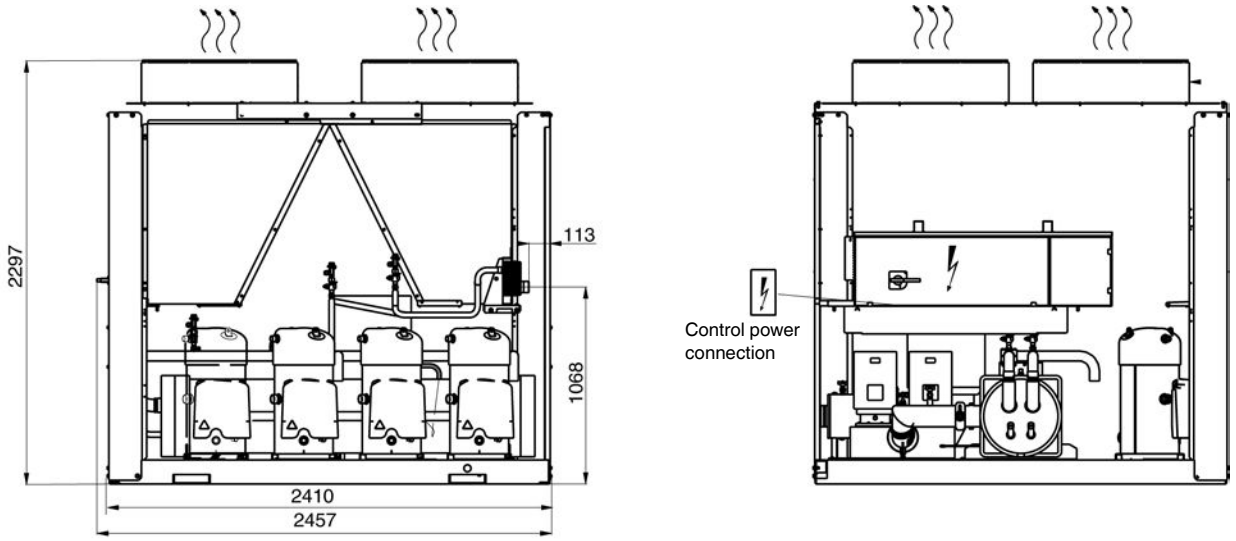

Unit with hydronic module

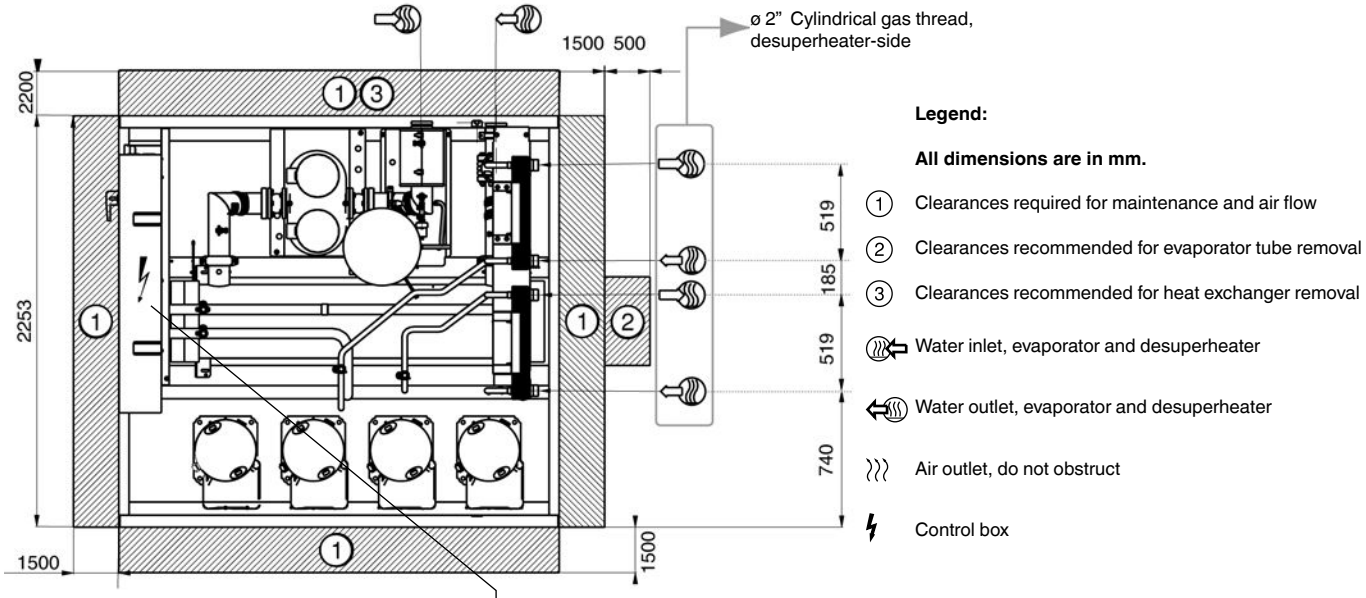

Unit without hydronic module

Control power user connection

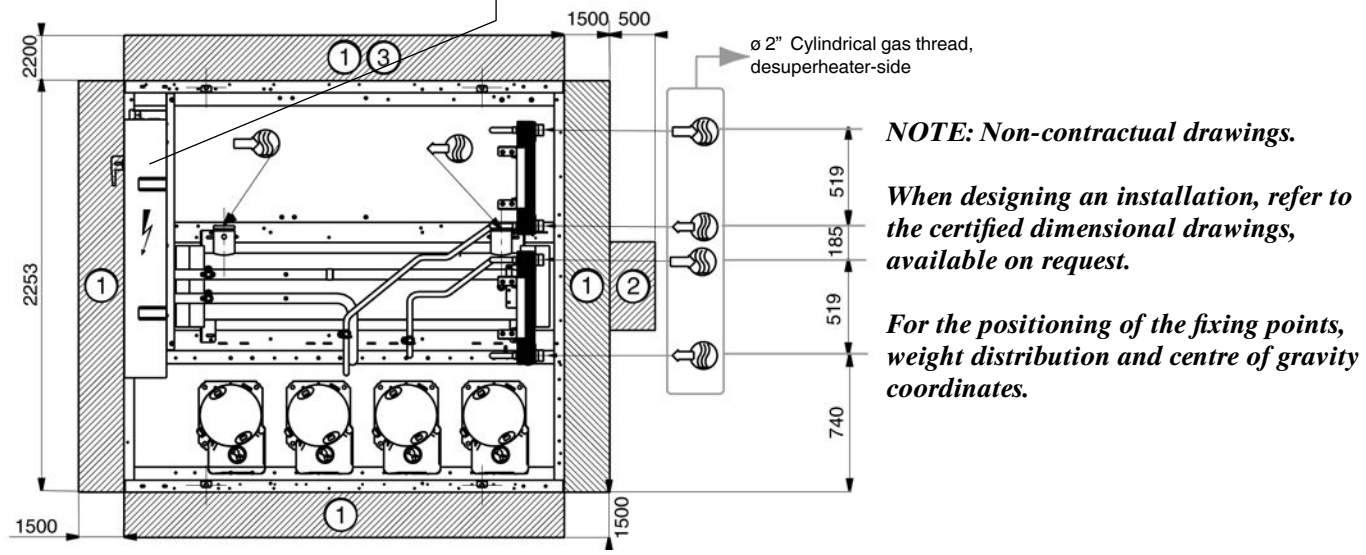

NOTE: Non-contractual drawings.

When designing an installation, refer to the certified dimensional drawings, available on request.

For the positioning of the fixing points, weight distribution and centre of gravity coordinates.

30RB 302-522

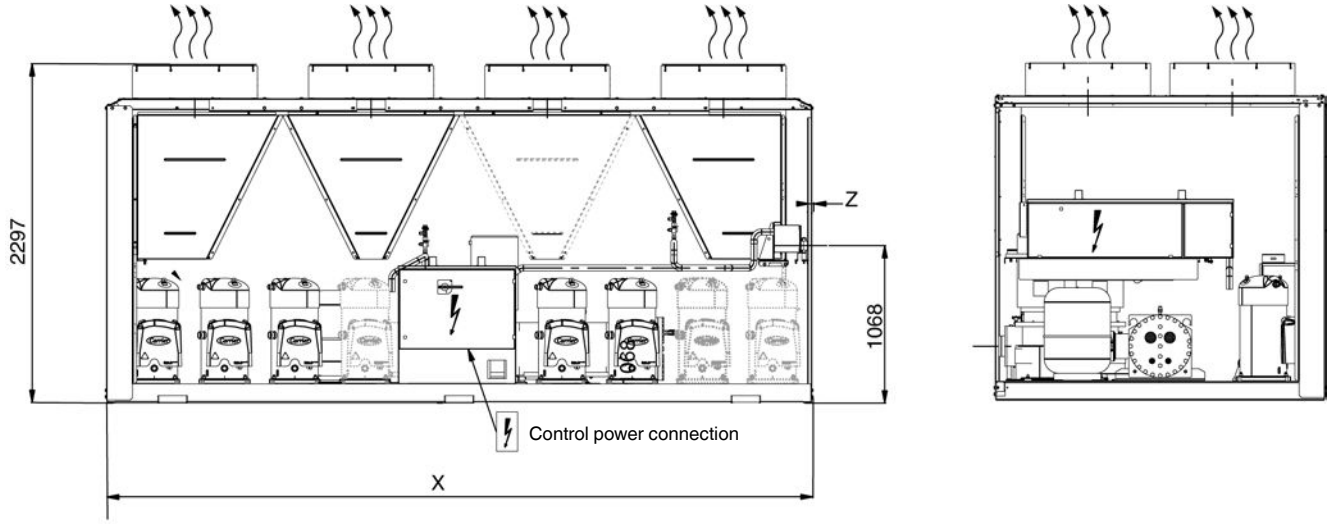

Unit with hydronic module

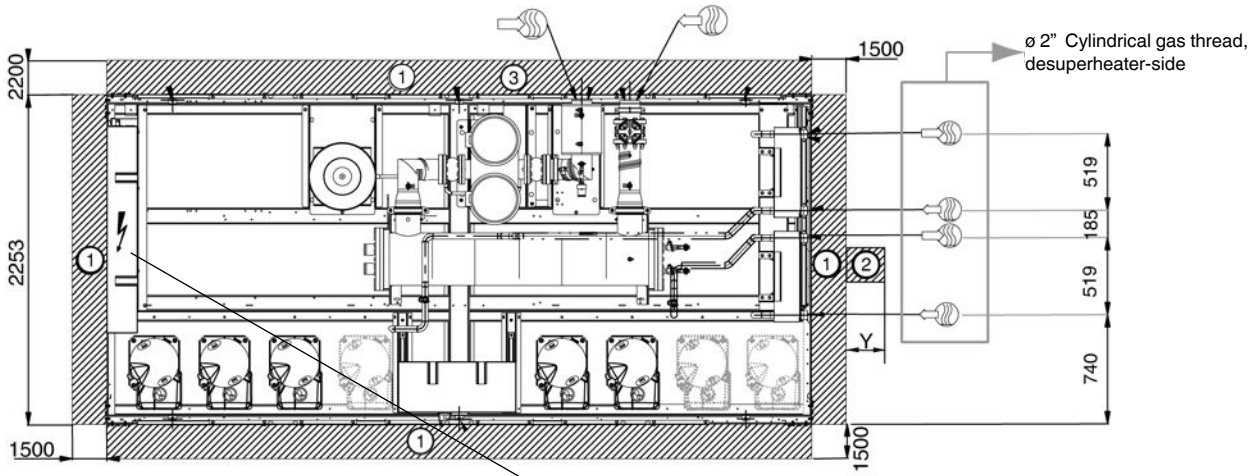

Unit without hydronic module

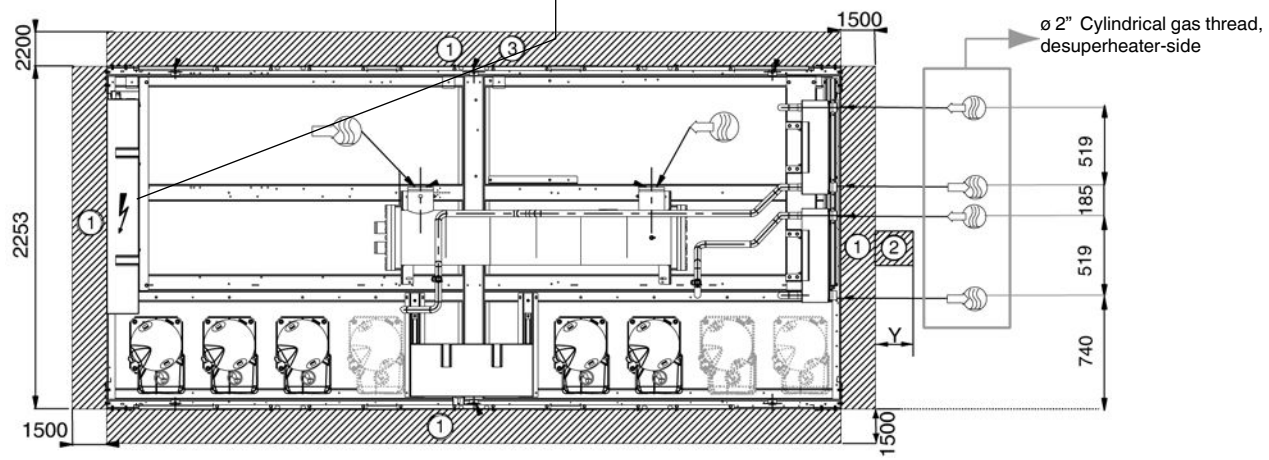

Legend:

All dimensions are in mm

Please refer to the legend and note on the next page.

30RB	X	Y	Z
302-402	3604	200	76
432-522	4798	0	30

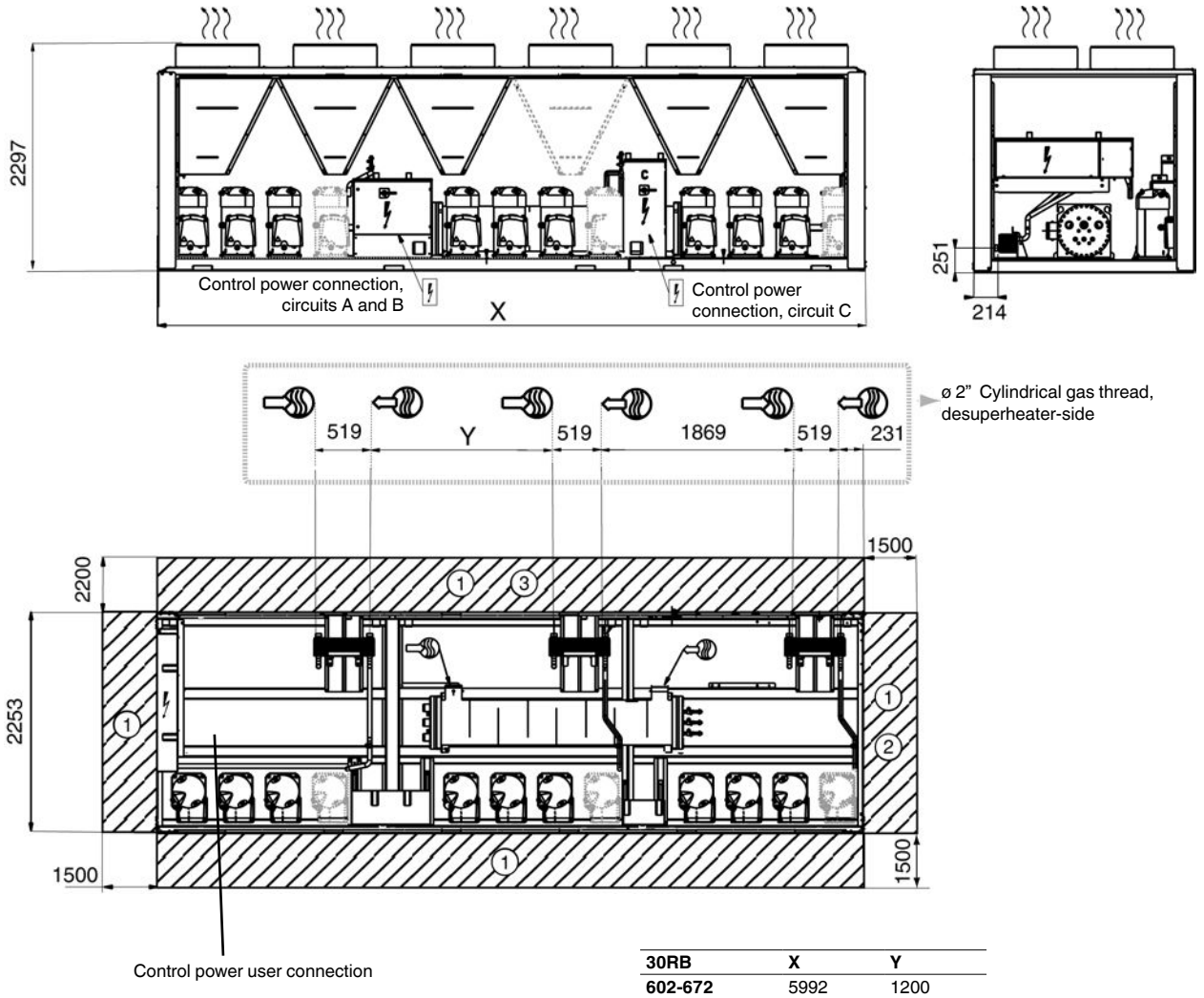

30RB	X	Y
602-672	5992	1200
732-802	7186	1869

Legend:

All dimensions are in mm.

① Clearances required for maintenance and air flow

② Clearances recommended for evaporator tube removal

③ Clearances recommended for heat exchanger removal

Water inlet, evaporator and desuperheater

Water outlet, evaporator and desuperheater

Air outlet, do not obstruct

Control box

Additional compressor(s), depending on the unit size

NOTE: Non-contractual drawings.

When designing an installation, refer to the certified dimensional drawings, available on request.

For the positioning of the fixing points, weight distribution and centre of gravity coordinates.

11.3.3 - Installation and operation of the heat reclaim with desuperheater option

The 30RB units with the desuperheater option (No. 49) are supplied with one heat exchanger per refrigerant circuit.

During the unit installation the heat reclaim plate heat exchangers must be insulated and frost protected, if required.

Please refer to the typical installation diagram below for the main components and functions of the 30RB units with the desuperheater option.

Typical installation diagram of units with the desuperheater option

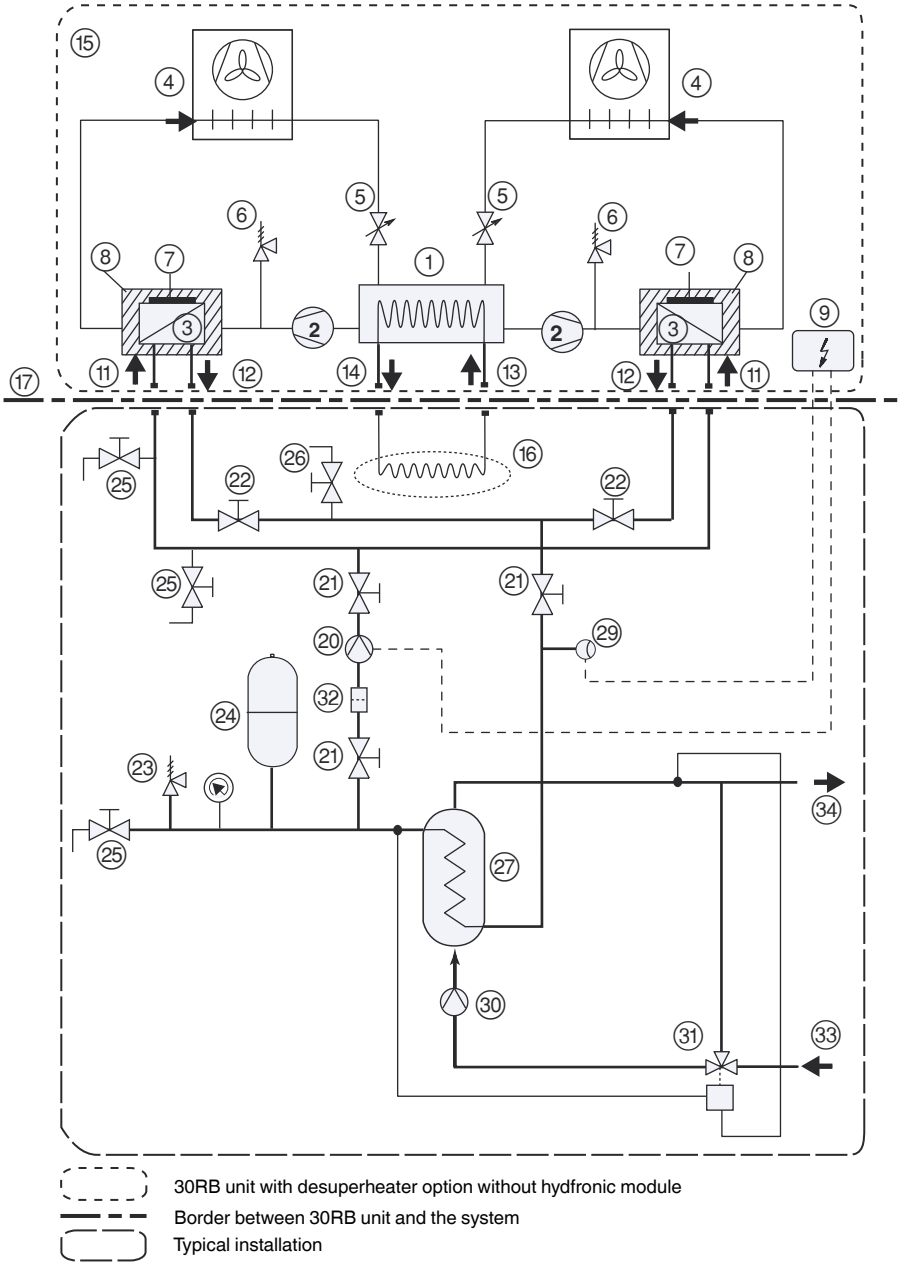

Legend

30RB unit components

1 Evaporator
2 Compressor
3 Desuperheater (plate heat exchanger)
4 Air condenser (coils)
5 Expansion valve (EXV)
6 Damage limitation accessory in case of a fire (safety valve)
7 Electric heater to protect the desuperheater against frost (not supplied)
8 Desuperheater insulation (not supplied)
9 Unit control box
10 NA
11 Desuperheater water inlet
12 Desuperheater water outlet
13 Evaporator water inlet
14 Evaporator water outlet
15 Unit with desuperheater option without hydronic module
16 System heat load
17 Border between the 30RB unit and the typical installation

Installation components (installation example)

20 Pump (hydronic circuit of the desuperheater loop)
21 Shut-off valve
22 Desuperheater water flow balancing and control valve
23 Damage limitation accessory in case of a fire (safety valve)
24 Expansion tank
25 Charge or drain valve
26 Air purge
27 Heat exchange coil or plate heat exchanger
28 Pressure gauge
29 Flow switch
30 Pump (sanitary hot water circuit)
31 Three-way valve + controller
32 Filter to protect the pump and the desuperheaters
33 District water supply
34 Sanitary hot water outlet

11.3.4 - Installation

The water supply of each desuperheater is arranged in parallel. The water connections on the desuperheater water inlets and outlets must not cause any mechanical local constraint at the heat exchangers. If necessary, install flexible connection sleeves.

Install water flow control and balancing valves at the heat exchanger outlet. Water flow control and balancing can be done by reading the pressure drop in the heat exchangers. This must be identical on all of them with the total water flow rate given by the "Electronic catalogue" selection program.

Refer to the pressure drop curves below to control the balancing valves before starting up the installation. The water flow control of each desuperheater can de refined when the unit operates at full load by trying to obtain leaving water temperatures that are absolutely identical for each circuit.

Desuperheater (plate heat exchanger pressure drop curves)

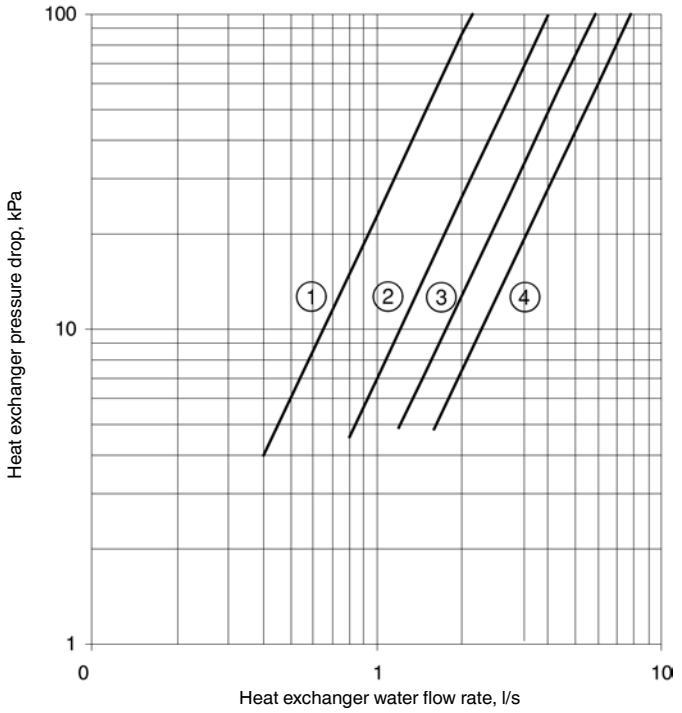

1 Circuit with one compressor
2 Circuit with two compressors
3 Circuit with three compressors
4 Circuit with four compressors

Operation of the pump (see typical diagram - item 20 of chapter 11.3.3) of the desuperheater water circuit can be linked to the start-up of the first unit compressor. This requires the installation of an additional electronic board in the control box: option 156, Energy Management Module.

Output No. 25 of the additional board of this option allows control of the pump operation - the pump will start up when the unit starts. A flow switch (item 29) can be installed to generate an alarm if there is a problem with the pump.

The volume of the desuperheater circuit water loop must be as low as possible so that the temperature can increase rapidly when the unit is started up. The minimum entering water temperature at the desuperheater is 25°C. This may require the use of a three-way valve (item 31), with a controller and the sensor controlling the minimum required entering water temperature.

The desuperheater water loop must include a safety valve and an expansion tank. When selecting these, consider the water loop volume and the maximum temperature (120°C) when pump operation is stopped (item 20).

11.3.5 - Operating range

Desuperheater		Minimum	Maximum
Entering water temperature at start-up	°C	25*	75
Leaving water temperature during operation	°C	30	80
Air condenser		**Minimum**	**Maximum**
Outside operating temperature	°C	0**	46

* The entering water temperature at start-up must not be lower than 25°C. For installations with a lower temperature a three-way valve is necessary.
** The minimum outside temperature is 0°C; -20°C with the winter operation option.

11.3.6 - Control configuration with the desuperheater option

This configuration allows the user to enter a setpoint that is relative to the minimum condensing temperature (default = 30°C) to increase the heating capacity reclaimed at the desuperheaters, if required. The percentage of the reclaimed heating capacity compared with the total capacity rejected by the condenser increases in proportion to the saturated condensing temperature.

For the setpoint control of the minimum saturated condensing temperature refer to the Pro-Dialog control manual.

Other parameters directly affecting the effective capacity reclaimed at the desuperheater are principally:

- The unit load rates, that decide whether the unit operates at full load (100%) or part load (depending on the number of compressors per unit circuit).
- The water entering temperature in the desuperheater as well as the condenser entering air temperature. See the curve below.

Coefficient of the heating capacity reclaimed at the desuperheater based on the entering water temperature at the desuperheater and the condenser entering air temperature

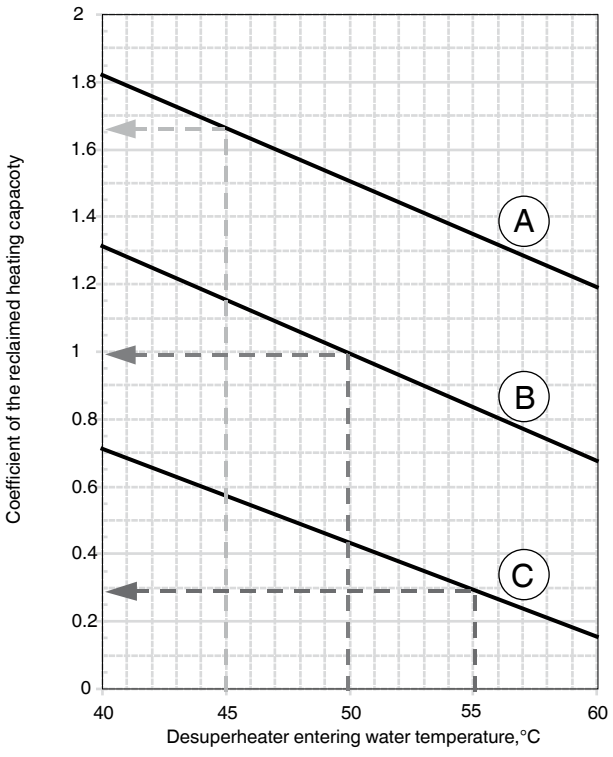

A Entering air temperature = 45 °C
B Entering air temperature = 35 °C
C Entering air temperature = 20 °C

Nominal conditions corresponding to coefficient = 1
Evaporator entering/leaving temperature = 12/7°C
Desuperheater entering/leaving temperature = 50/60°C
Condenser entering air temperature = 35°C (curve B)

11.4 - Units with fans with available pressure for indoor installation (option 12)

This option applies to 30RB units installed inside the building in a plant room. For this type of installation the hot air leaving the air-cooled condensers is discharged by the fans to the outside of the building, using a duct system.

The installation of a duct system at the air condenser discharge line causes a pressure drop due to the resistance caused by the air flow.

Therefore more powerful fan motors than those used for the standard units are installed in this option. For each installation of a unit installed inside a plant room the duct pressure drops differ, depending on the duct length, duct section and direction changes.

30RB units equipped with fans with available pressure are designed to operate with air discharge ducts with maximum pressure drops of 200 Pa.

To compensate for these pressure drops 30RB units with option 12 are equipped with variable-speed fans with a maximum speed of 19 r/s, instead of 15.8 r/s and fixed-speed fans as for the standard units.

Use of variable speed up to 19 r/s can overcome the duct pressure drops while maintaining an optimised air flow per circuit. All fans in the same circuit, operating at the same time, have the same speed.

The maximum fan power input for fans with a speed of 19 r/s is increased compared to that of standard fans with a speed of 15.8 r/s (the coefficient is the same as the cube of the speed ratio i.e. x 1.72).

The full-load or part-load speed is controlled by a patented algorithm that permanently optimises the condensing temperature to ensure the best unit energy efficiency (EER) whatever the operating conditions and pressure drops of the system ductwork.

If necessary for a specific installation, the maximum fan speed of 30RB units can be fixed between 13 and 19 r/s, using the Service Configuration menu. Consult the 30RB Pro-Dialog control manual for this modification.

The unit cooling capacity and energy efficiency ratio (EER) varies depending on the duct pressure drops:
- between 0 and 100 Pa the unit cooling capacity is only slightly affected,
- between 100 and 200 Pa the unit cooling capacity falls considerably depending on the operating conditions (outdoor air temperature and water conditions).

Please refer to the curves below to evaluate the impact of the estimated duct system pressure drop for the installation and the impact of different full load operating conditions on the 30RB unit cooling capacity and EER.

Cooling capacity variations for operating conditions that differ from Eurovent conditions

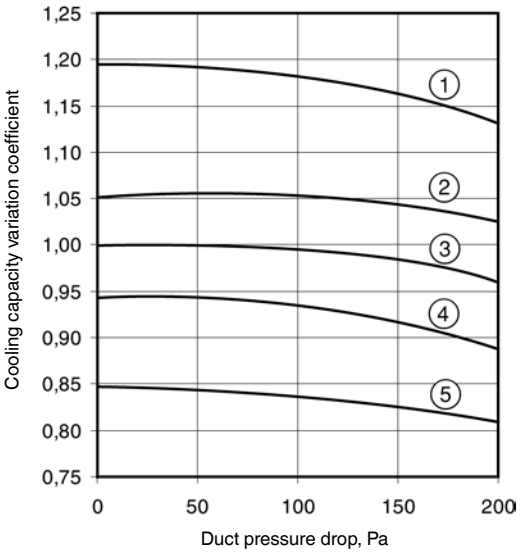

EER variations for operating conditions that differ from Eurovent conditions

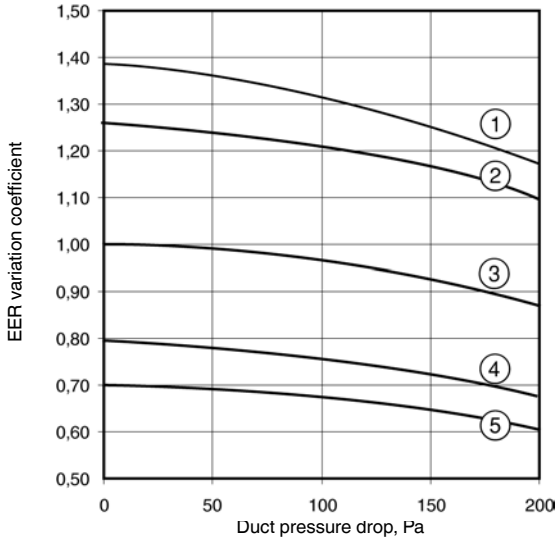

Operating conditions				
Curve No.	**Outside temperature, °C**	**Entering water temperature, °C**	**Leaving water temperature, °C**	**Load, %**
1	25	15	10	100
2	25	10	5	100
3 Eurovent	**35**	**12**	**7**	**100**
4	45	15	10	100
5	45	10	5	100

11.4.1 - Installation

All fans in the same refrigerant circuit are controlled by a single speed variator and therefore all run at the same speed.

Each refrigerant circuit (A, B and C) must have a separate ducting system to prevent any air recycling between the condensers of the different refrigerant circuits.

In 30RB units with option 12 each fan is equipped with a factory-installed connection interface, allowing the connection to the ducting system for the specific circuit (A, B and C) for each fan. Please refer to the unit dimensional drawings for the exact dimensions of the connection interface.

Number of fans (EV--) per refrigerant circuit (A, B and C) for different unit sizes

Position of V-shape air heat exchanger for each unit size

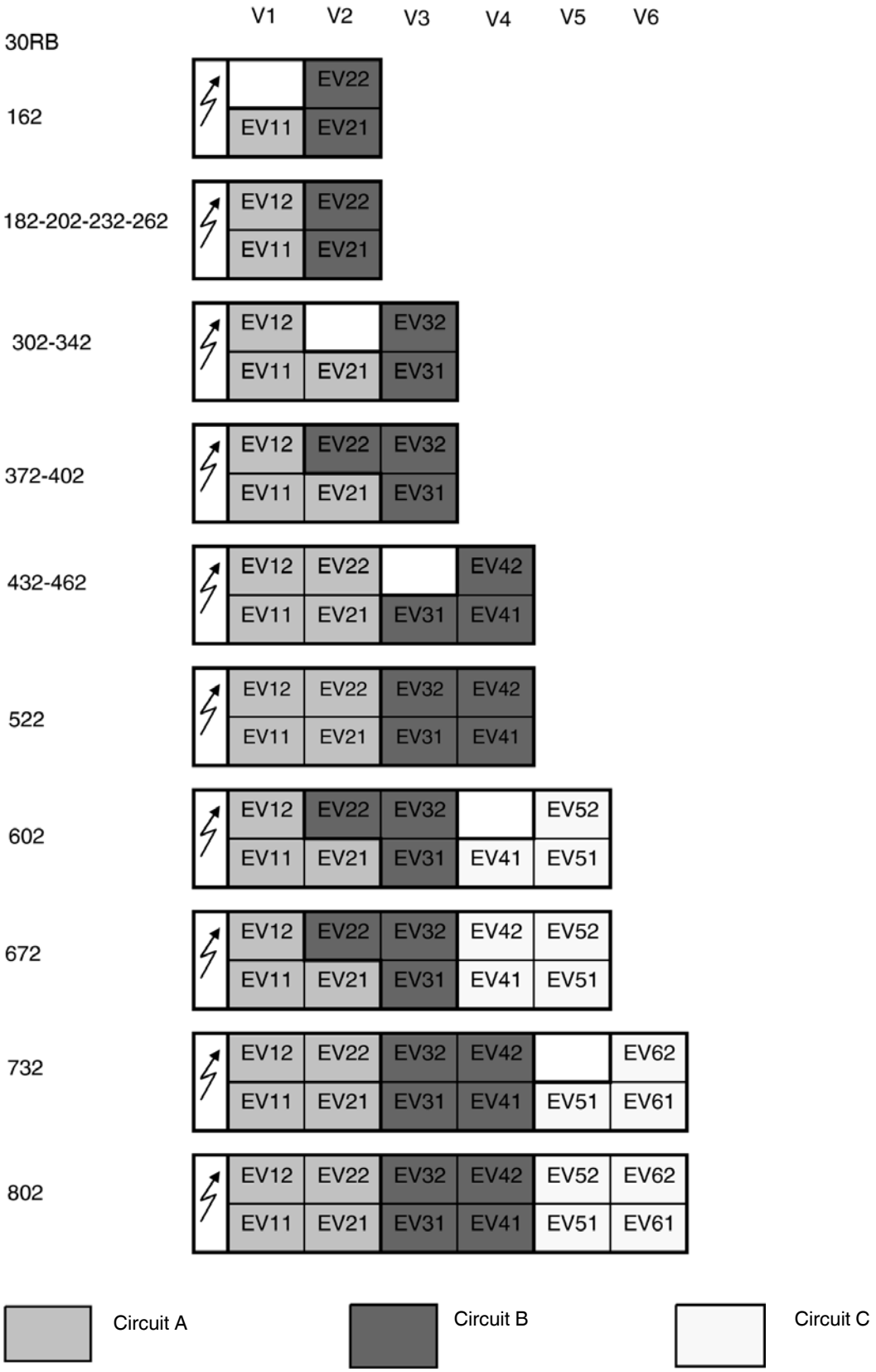

Refrigerant circuit Circuit A Circuit B Circuit C

11.4.2 - Nominal and maximum air flows per circuit (A, B and C) for 30RB sizes

30RB	Circuit A Nominal/maximum air flow, l/s	Circuit B Nominal/maximum air flow, l/s	Circuit C Nominal/maximum air flow, l/s
162	4515/5555	9030/11110	
182-262	9030/11110	9030/11110	-
302-342	13540/16670	9030/11110	-
372-402	13540/16670	13540/16670	-
432-462	18060/22220	13540/16670	-
522	18060/22220	18060/22220	-
602	13540/16670	13540/16670	13540/16670
672	13540/16670	13540/16670	18060/22220
732	18060/22220	18060/22220	13540/16670
802	18060/22220	18060/22220	18060/22220

11.4.3 - Factory-installed duct connection interface on the support deck of each fan

For the exact dimensions of the connection interface please refer to the unit dimensional drawings.

V-shaped air heat exchangers

View from above

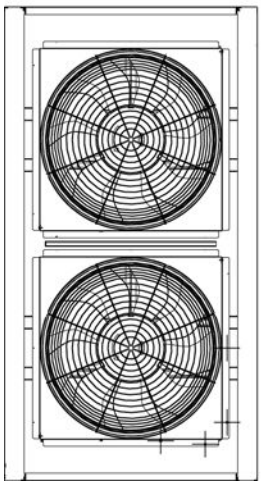

Side view

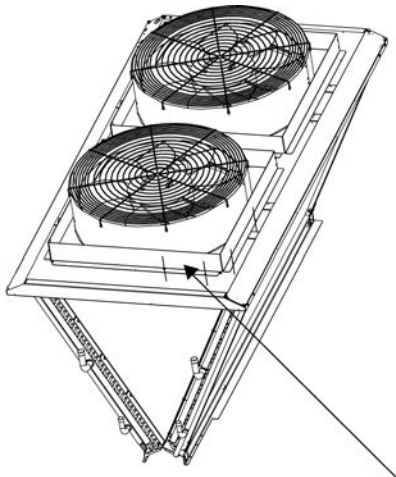

Detail of the duct connection interface frame

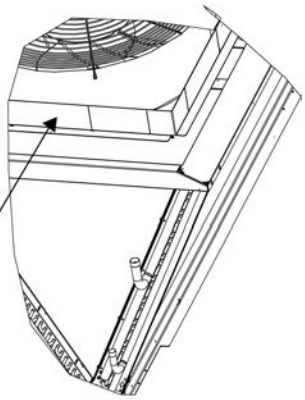

Size of the duct connection frame
860 x 860 x 100 mm

Duct installation examples

Case 1
For units 30RB 162 with two V-shaped air condensers.

Solution 1

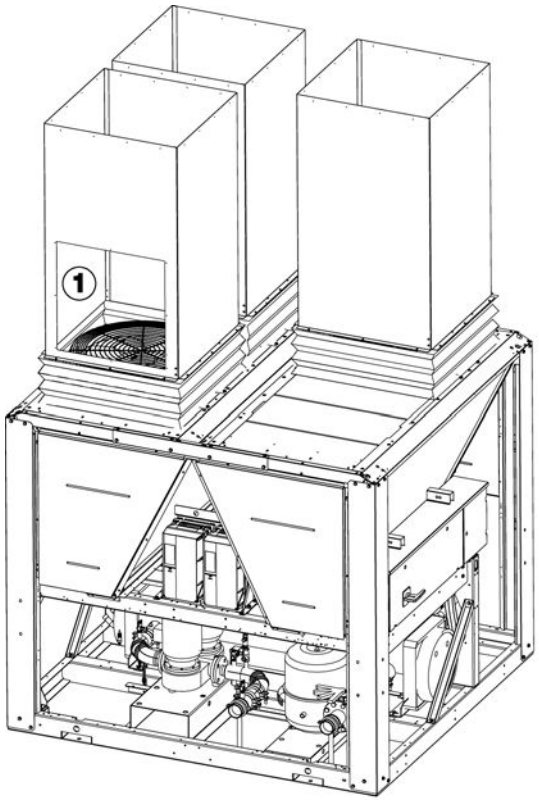

Solution 2

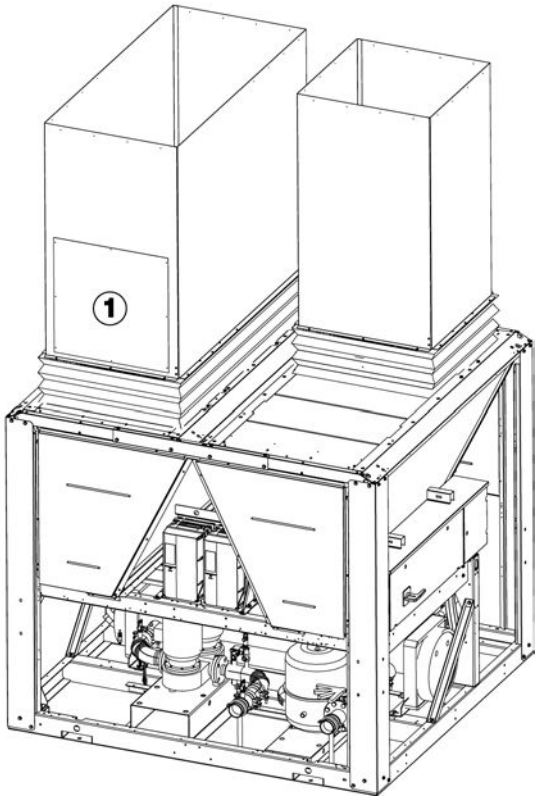

① Fan motor access hatches (provide a 700 x 700 mm hatch) for each single and dual duct

Solution 1
One separate duct per fan

Circuit A
EV11
Circuit B
EV21-EV22

Each fan discharge to the outside has its own duct.

Solution 2

Circuit A
One separate duct for the EV11 fan
Circuit B
One separate duct for the EV21 + EV22 fan pair

Duct installation examples (continued)

Case 2
For units 30RB 182-262 with two V-shaped air condensers.

Solution 1

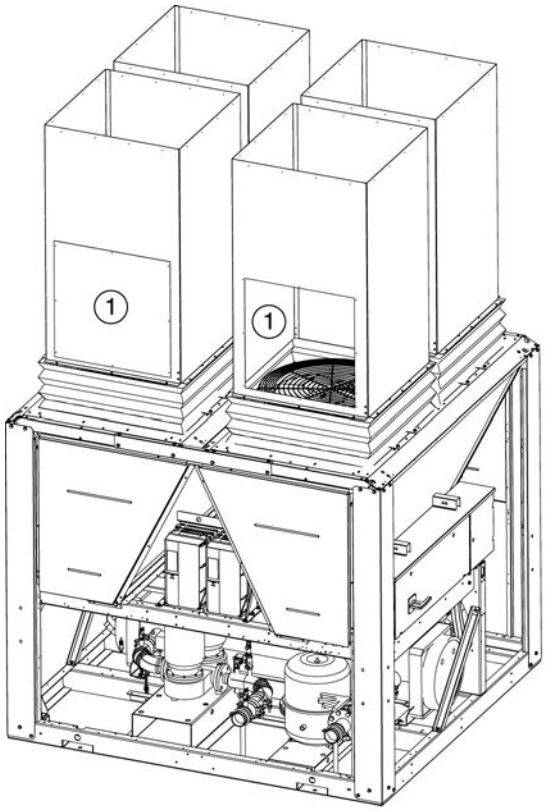

Solution 2

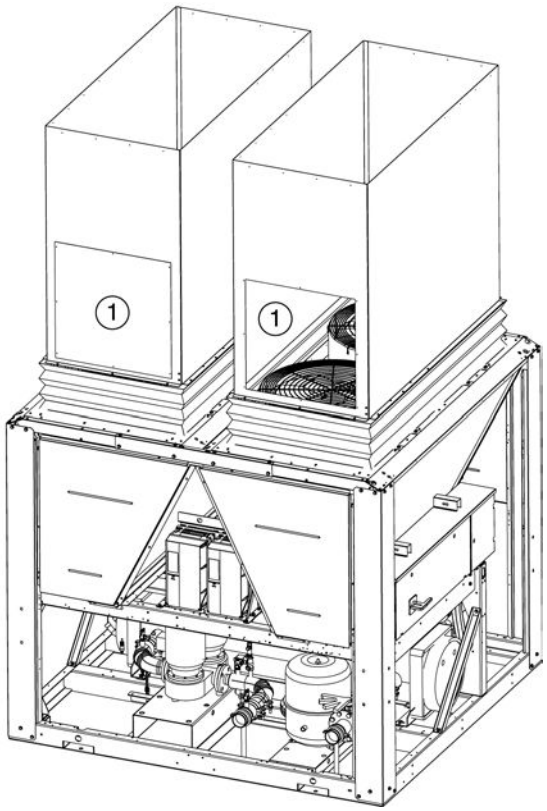

① Fan motor access hatches (provide a 700 x 700 mm hatch) for each single and dual duct

Solution 1
One separate duct per fan

Circuit A
EV11-EV12
Circuit B
EV21-EV22

Each fan discharge to the outside has its own duct.

Solution 2

Circuit A
One separate duct for the EV11 + EV12 fan pair
Circuit B
One separate duct for the EV21 + EV22 fan pair

Each fan pair discharge to the outside has its own duct.

Duct installation examples (continued)

Case 3
For 30RB 302 and 342 units with three V-shaped air condensers, where the middle V-shaped condenser 2 and fan EV 21 only belong to circuit A (see chapter “Number of fans per refrigerant circuit for different unit sizes”).

Solution 1

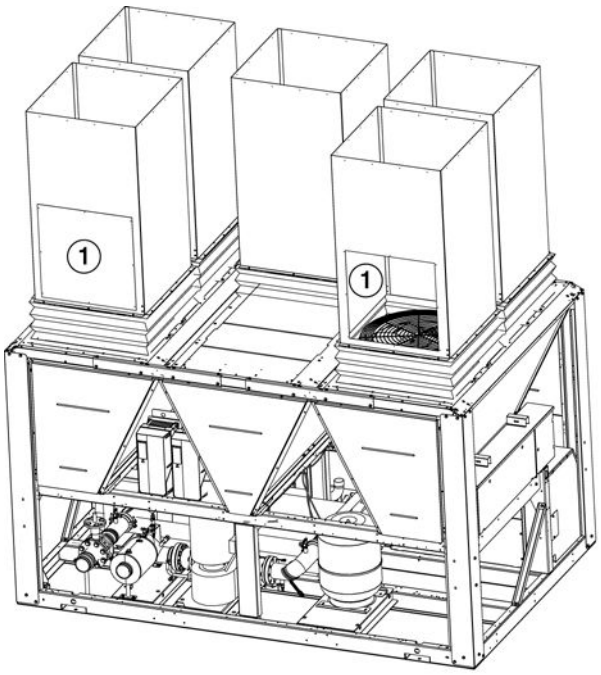

Solution 2

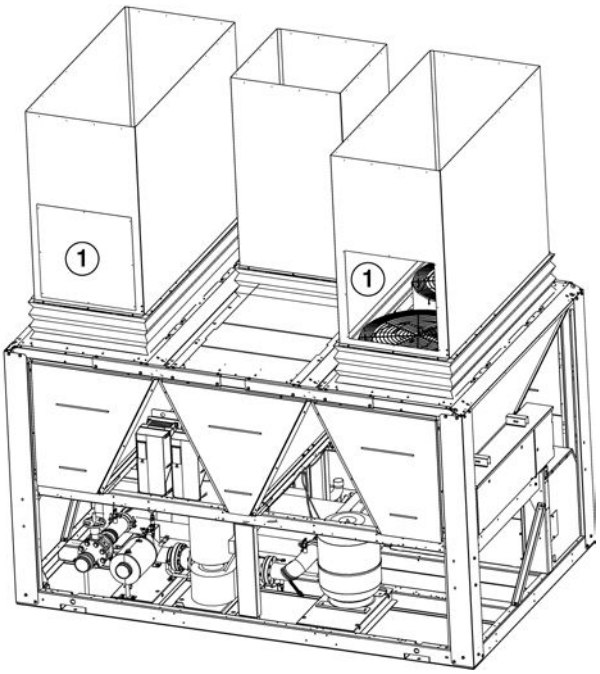

① Fan motor access hatches (provide a 700 x 700 mm hatch) for each single and dual duct

Solution 1
One separate duct per fan

Circuit A
EV11-EV12-EV21
Circuit B
EV31-EV32
Each fan discharge to the outside has its own duct.
Circuit A
Discharge twinning possible: EV11 + EV12 + EV21
Circuit B
Discharge twinning possible: EV31 + EV32

Solution 2

Circuit A
One separate duct for the EV11 + EV12 fan pair
One separate duct for fan EV21
Discharge twinning possible: (EV11 + EV12) + EV21
Circuit B
One separate duct for the EV31 + EV32 fan pair

ATTENTION: Fan EV21 must never be twinned with fans EV31 and EV32, as this may cause air short-circuiting between circuits A and B.

Duct installation examples (continued)

Case 4
For units 30RB 372 and 402 with three V-shaped air condensers, where the middle V-shaped condenser 2 belongs to both circuits A and B (see chapter “Number of fans per refrigerant circuit for different unit sizes”).

Similar recommendations apply to units 30RB 602 and 672 that also have overlapping air condenser circuits for V-shaped condenser 2.

Solution 1

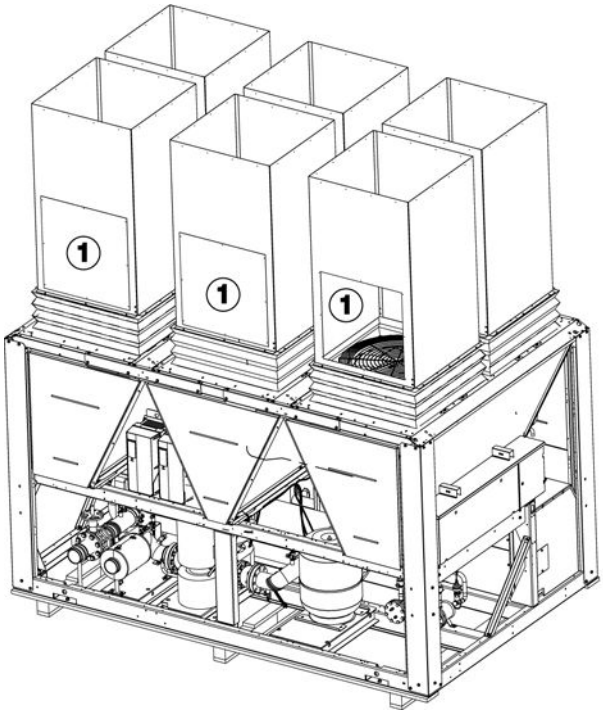

Solution 2

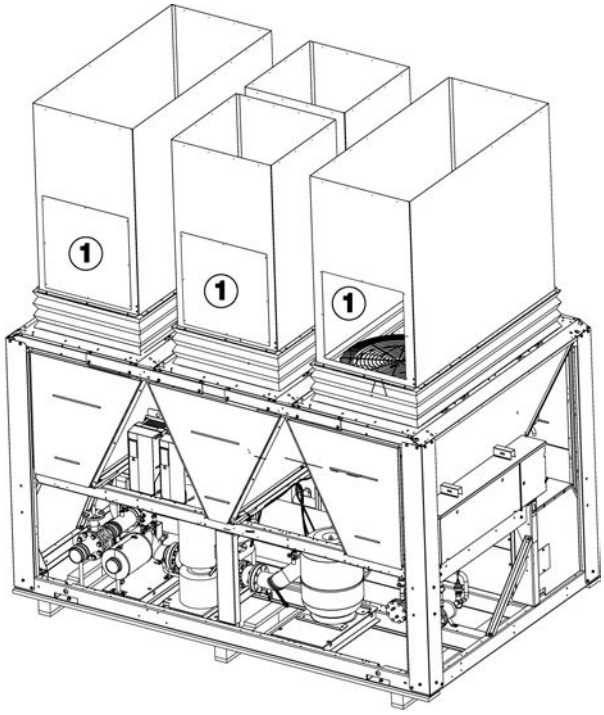

① Fan motor access hatches (provide a 700 x 700 mm hatch) for each single and dual duct

Solution 1
One separate duct per fan

Circuit A
EV11-EV12-EV21
Circuit B
EV22-EV31-EV32
Each fan discharge to the outside has its own duct.
Circuit A
Discharge twinning possible: EV11 + EV12 + EV21
Circuit B
Discharge twinning possible: EV22 + EV31 + EV32

Solution 2

Circuit A
One separate duct for the EV11 + EV12 fan pair
One separate duct for fan EV21
Discharge twinning possible: (EV11 + EV12) + EV21
Circuit B
One separate duct for the EV31 + EV32 fan pair
One separate duct for fan EV22
Discharge twinning possible: (EV31 + EV32) + EV22

ATTENTION: Fans EV21 and EV22 must never be twinned, as this may cause air short-circuiting between circuits A and B.

Similarly, the four configuration examples shown above also cover the application on the other 30RB units.

IMPORTANT: The unit duct connection must not create any mechanical constraint on the fan support deck.

The fan housings and the fan protection grilles must always remain in their position inside the ducts.

Use bellows or flexible sleeves for the duct connection.

At the outlet of each duct provide an access hatch with a minimum size of 700 x 700 mm to allow motor replacement and disassembly of the fan wheel.

Fan motor electrical protection
In case of a locked rotor or an overload, the motors of each circuit are electrically protected by the circuit drive. Each drive follows a variable current characteristic, based on the frequency from 10 to 60 Hz and the number of fans controlled.

If a fan is not operating correctly, the drive automatically detects the problem and sends an alert to the Pro-Dialog display. Please refer to the Pro-Dialog control manual for the list of specific alarms for this option.

11.5 - Brine option

This option allows production of brine down to -10°C. The unit is equipped with reinforced evaporator insulation as well as suction pipe insulation. The operating range is a function of the suction pressure, which in turn is a function of:
- the brine type,
- the brine concentration,
- the flow rate,
- the brine temperature,
- the condensing pressure (ambient temperature).

Example: For operation with propylene glycol at 40% and a brine temperature of -10°C (entering temperature -5°C), the maximum ambient operating temperature will be around 38°C.

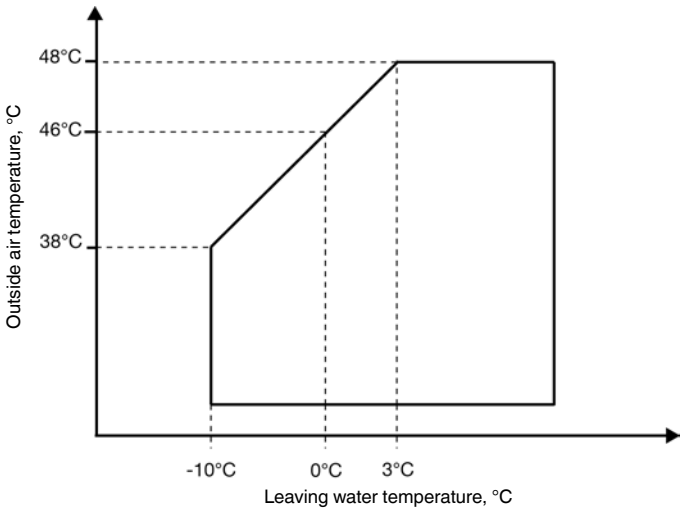

With propylene glycol at 40%

To find out the operating limits for each unit, based on the brine type and the brine concentration, please refer to the selection software.

11.5.1 - Frost protection
The evaporator low pressure and frost protection depends on the amount of antifreeze added to the water circuit (evaporator approach as well as frost protection are based on this amount).

It is therefore essential to control the amount of antifreeze in the water loop at the first start-up (circulate for 30 minutes to ensure good homogeneity of the mixture before taking the sample). Refer to the manufacturer's data to define the frost protection, based on the concentration rate measured.

The frost protection value (temperature) must be used in the unit software parameters (see Carrier Service Guide). This value will allow the definition of the following limits:
1. Evaporator frost protection
2. Low pressure protection

It is recommended that the commissioning of a brine system is done by Carrier.

For information: The protection values given by our supplier, based on the antifreeze solutions used in the Carrier Montluel laboratory, are as follows: (these values can change for different suppliers).

% by weight Ethylene glycol	Freeze point, °C Ethylene glycol	% by weight Propylene glycol	Freeze point, °C Propylene glycol
10	-3.8	10	-2.6
15	-6.1	15	-4.3
20	-8.8	20	-6.6
25	-11.8	25	-9.6
30	-15.2	30	-13
35	-19.1	35	-16.7
40	-23.6	40	-20.7
45	-29	45	-25.3

Based on the table above, if the ethylene glycol concentration by weight in the water loop is 35% the value of -19.1°C must be used in the software.

It is essential to carry out an annual check (minimum) of the amount of glycol, and adjust the frost protection value in the software based on the rate measured. This procedure must be systematic, if water or antifreeze solution is added.

11.5.2 - Units equipped with hydronic kit

If the antifreeze concentration exceeds 30%, it is recommended to reduce the brine flow rate to prevent overloading and over-heating of the motor.

IMPORTANT: Never use a glycol concentration of less than 20%, as the brine will become aggressive and there will be an increased risk of corrosion of the cast iron parts of the hydronic kit.

The flow rate limits are given in the table below:
For an application between 32 and 40% and operation at an outside air temperature between 40 and 48°C use linear interpolation.

30RB with hydronic kit		162	182	202	232	262	302	342	372	402	432	462	522
High/low-pressure pump													
Max. flow rate with clear water	l/s												
Ambient temperature = 48°C		14.7	14.7	14.7	14.7	14.7	18.9	18.9	24.4	24.4	24.4	29.4	29.4
Low-pressure pump		(L/J) RL	(L/J) RL	(L/J) RL	(L/J) RL	(L/J) RL	(L/J) RL	(L/J) RL	(L/J) RL	(L/J) RL	(L/J) RL	(L/J) RN	(L/J) RN
		206	206	206	206	206	206	206	208	208	208	208	208
		11/2.2	11/2.2	11/2.2	11/2.2	11/2.2	11/3	11/3	12/4	12/4	12/4	13/5.5	13/5.5
Max. flow rate, 40% antifreeze	l/s												
Ambient temperature = 40°C		12.8	12.8	12.8	12.8	12.8	17.8	17.8	18.9	18.9	18.9	21.7	21.7
Ambient temperature = 48°C		11.9	11.9	11.9	11.9	11.9	15.3	15.3	16.9	16.9	16.9	20.0	20.0
High-pressure pump		(L/J) RL	(L/J) RL	(L/J) RL	(L/J) RN	(L/J) RN	(L/J) RN	(L/J) RN	(L/J) RN	(L/J) RN	(L/J) RN	(S/D) IL	(S/D) IL
		206	206	206	205	205	206	206	206	206	206	206	206
		14/4	14/4	14/4	14/4	14/4	15/5.5	15/5.5	18/7.5	18/7.5	18/7.5	19/11	19/11
Max. flow rate, 40% antifreeze	l/s												
Ambient temperature = 40°C		13	13	13	11.7	11.7	17.2	17.2	21.7	21.7	21.7	26.1	26.1
Ambient temperature = 48°C		12.5	12.5	12.5	11.1	11.1	16.1	16.1	20.0	20.0	20.0	24.2	24.2

11.6 - Unit storage above 48°C (option 241)

During transport in a closed container the refrigerant charge must be transferred to the condenser. This prevents that the pressure in the evaporator reaches the valve calibration pressure during transport (if this happened, the charge would be evacuated to the atmosphere and the unit would be empty when it arrives on site). For this reason the charge is transferred to and stored in the condenser, and the liquid and discharge line valves are closed.

The following precautions must be taken during installation:

- Ensure that there is sufficient water flow in the evaporator.
- Energise the unit.
- Open the liquid line valves.
- Open the EXV to return the charge to the evaporator; pressure equalisation must be verified by a quick test procedure.
- Open the discharge line valve.

11.7 - Other options and accessories

Options	No.	Description	Advantages	Use
Condenser with anti-corrosion post-treatment	2B	Coils with copper tubes and aluminium fins with Blygold Polual treatment	Improved corrosion resistance, recommended for marine, industrial and rural environments	30RB 162-802
Corrosion protection, traditional coils	3A	Pre-treated aluminium fins (polyurethane + epoxy)	Improved corrosion resistance, recommended for marine, moderate or urban environments	30RB 162-802
Unit for low leaving water temperature	6	Leaving water temperature of +3°C to -10°C.	All low-temperature applications: ice storage, cold stores, process cooling etc.	30RB 162-402
Unit for indoor installation with discharge ducts	12	Fans with available pressure	Ducted condenser air discharge, optimised condensing temperature control, based on the operating conditions and system characteristics	30RB 162-802
Low noise level	15	Sound absorbing compressor enclosure	Noise emission reduction	30RB 162-802
Very low noise level	15LS	Sound absorbing compressor enclosure and low-speed fans	Noise emission reduction	30RB 162-802
Grilles	23	Metallic grilles on all four unit faces (this option includes the supply of enclosure panels)	Improved aesthetics	30RB 162-802
Enclosure panels (for units with copper/ aluminium coils only)	23A	Side panels on each end of the coils	Improved aesthetics	30RB 162-802
Electronic starter	25	Electronic starter on each compressor	Reduced start-up current	30RB 162-522
Winter operation down to -20°C	28	Fan speed control via frequency converter	Stable unit operation when the air temperature is between 0°C and -20°C	30RB 162-802
Winter operation down to -10°C	28B	Twin-speed lead fan for each circuit	Stable unit operation when the air temperature is between 0°C and -10°C	30RB 162-802
Winter operation down to -10°C and very low noise level (options 28B + 15LS)	28C	Sound absorbing compressor enclosure and low-speed fans + twin-speed lead fan for each circuit	Noise emission reduction and stable unit operation when the air temperature is between 0°C and -10°C	30RB 162-802
Evaporator and water piping frost protection	41	Electric heater on the evaporator and the water inlet/outlet piping	Evaporator frost protection for air temperatures between 0°C and -20°C	30RB 162-802
Evaporator, water piping and hydronic module frost protection	42A	Electric heaters on the evaporator, the water inlet/ outlet piping and hydronic module	Evaporator and hydronic module frost protection for air temperatures between 0°C and -20°C	30RB 162-522
Partial heat reclaim	49	Partial heat reclaim by desuperheating of the compressor discharge gas	Free high-temperature hot-water production simultaneously with chilled-water production	30RB 162-802
Total heat reclaim	50	See heat reclaim option. Note: Unit equipped with coils with copper tubes and aluminium fins	Free hot water production simultaneously with chilled water production	30RB 262-522
Twinning	58	Unit equipped with an additional field-installed leaving water temperature sensor, allowing master/ slave operation of two chillers connected in parallel	Optimised operation of two chillers connected in parallel with operating time equalisation	30RB 162-802
Main disconnect switch without fuse (standard for sizes 182-262)	70	Factory-installed main electric disconnect switch in the control box	Ease-of-installation and compliance with local electrical regulations	30RB 302-802
Main disconnect switch with fuse	70D	Factory-installed main electric disconnect switch with fuse in the control box	Same advantage as main disconnect switch and reinforced anti-short circuit protection	30RB 302-802
Evaporator with aluminium jacket	88	Evaporator thermal insulation protection by aluminium sheets	Improved resistance to climatic aggression	30RB 162-802
Evaporator and hydronic module with aluminium jacket	88A	Evaporator and water piping thermal insulation protection by aluminium sheets	Improved resistance to climatic aggression	30RB 302-522
Suction valve	92	Shut-off valve on the compressor suction piping (discharge valve as standard)	Simplified maintenance	30RB 302-802
Compressor suction and discharge valves	92A	Shut-off valves on the common compressor suction and discharge piping	Simplified maintenance	30RB 162-262
High-pressure single-pump hydronic module	116B	See hydronic module option	Easy and fast installation	30RB 162-522
High-pressure dual-pump hydronic module	116C	See hydronic module option	Easy and fast installation, operating safety	30RB 162-522
Low-pressure single-pump hydronic module	116F	See hydronic module option	Easy and fast installation	30RB 162-522
Low-pressure dual-pump hydronic module	116G	See hydronic module option	Easy and fast installation, operating safety	30RB 162-522
High-pressure single-pump hydronic module (without control valve and pressure gauge)	116M	See hydronic module option	Easy and fast installation	30RB 162-522
High-pressure dual-pump hydronic module (without control valve and pressure gauge)	116N	See hydronic module option	Easy and fast installation, operating safety	30RB 162-522
Low-pressure single-pump hydronic module (without control valve and pressure gauge)	116P	See hydronic module option	Easy and fast installation	30RB 162-522
Low-pressure dual-pump hydronic module (without control valve and pressure gauge)	116Q	See hydronic module option	Easy and fast installation, operating safety	30RB 162-522
Direct-expansion free cooling system	118A	See free cooling option. Note: Unit equipped with coils with copper tubes and aluminium fins	Economic chilled-water production at low outside temperature	30RB 232-522
JBus gateway	148B	Two-directional communications board, complies with JBus protocol	Easy connection by communication bus to a building management system	30RB 162-802
Bacnet gateway	148C	Two-directional communications board, complies with Bacnet protocol	Easy connection by communication bus to a building management system	30RB 162-802
LonTalk gateway	148D	Two-directional communications board, complies with LonTalk protocol	Easy connection by communication bus to a building management system	30RB 162-802
Energy Management Module EMM	156	See controls manual	Easy wired connection to a building management system	30RB 162-802
Dual safety valves installed with twinning valve	194	Three-way valve upstream of the safety valves (not compatible with the plate heat exchanger version)	Safety valve inspection and replacement facilitated without refrigerant loss	30RB 162-802
Conformance with Australian regulations	200	Heat exchanger approved to Australian code	-	30RB 162-802
Unit storage above 48°C	241	Refrigerant charge stored in the condenser. Option not compatible with MCHX coils; Cu/Al coils are required to store the charge.	Unit transport by container only possible with this option	30RB 162-802
Traditional Cu/Al coils	254	Coils with copper tubes and aluminium fins	Possibility to add special treatments	30RB 162-802
MCHX anti-corrosion protection	263	MCHX protection by the Carrier factory for applications in aggressive environments	The Super Enviro-Shield option was developed to increase the application range of MCHX coils to severe environmental conditions: this option is compulsory for industrial environments, for sites that are < 8 km from the sea or on islands with a diameter of < 64 km	30RB 162-262
Shell-and-tube water heat exchanger	280	Direct-expansion shell-and-tube heat exchanger	More robust heat exchanger. Ensures compatibility with other options than those available with the standard unit (see Electronic Catalogue)	30RB 162-262

11.7 - Other options and accessories

Accessories		Description	Advantages	Use
Connection sleeve	-	Piping to be welded with Victaulic connection	Ease-of-installation	30RB 162-802
Energy Management Module EMM	-	See controls manual	Easy connection by wired connection to a building management system	30RB 162-802
Scrolling Marquee Interface	-	Remotely installed user interface (communication bus)	Remote chiller control up to 300 m	30RB 162-802
Power cable connection side extension	-	Side extension on the power control to allow a reduced cable bend radius	Use of thicker power cables	30RB 302-802
Connection sleeve, standard unit	-	Water inlet/outlet extension for connection with a Victaulic collar on the water inlet/outlet piping	Facilitates connection	30RB 162-262

12 - STANDARD MAINTENANCE

Air conditioning equipment must be maintained by professional technicians, whilst routine checks can be carried out locally by specialised technicians.

Simple preventive maintenance will allow you to get the best performance from your HVAC unit:
- improved cooling performance
- reduced power consumption
- prevention of accidental component failure
- prevention of major time-consuming and costly work
- protection of the environment

There are five maintenance levels for HVAC units, as defined by the AFNOR X60-010 standard.

12.1 - Level 1 maintenance (see note opposite)

Simple procedure can be carried out by the user:
- Visual inspection for oil traces (sign of a refrigerant leak),
- Air heat exchanger (condenser) cleaning - see chapter 'Condenser coil - level 1',
- Check for removed protection devices, and badly closed doors/covers,
- Check the unit alarm report when the unit does not work (see report in the 30RB Pro-Dialog Plus control manual).
- Verification of the charge in the liquid line sight glass,
- Verify that the temperature difference between the heat exchanger inlet and outlet is correct.
- General visual inspection for any signs of deterioration.

12.2 - Level 2 maintenance (see note opposite)

This level requires specific know-how in the electrical, hydronic and mechanical fields. It is possible that these skills are available locally: existence of a maintenance service, industrial site, specialised subcontractor.

In these cases, the following maintenance operations are recommended.

Carry out all level 1 operations, then:
- At least once a year tighten the power circuit electrical connections (see table with tightening torques opposite).
- Check the expansion tank for signs of excessive corrosion or gas pressure loss and replace it, if necessary.
- Check and retighten all control/command connections, if required (see table with tightening torques opposite).
- Remove the dust and clean the interior of the control boxes, if required.
- Check the presence and the condition of the electrical protection devices.
- Check the correct operation of all heaters.
- Replace the fuses every 3 years or every 15000 hours (age-hardening).
- Check the water connections.
- Purge the water circuit (see chapter 'Water flow control procedure').
- Clean the water filter (see chapter 'Water flow control procedure').
- Fully clean the condensers with a low-pressure jet and a bio-degradable cleaner (counter-current cleaning - see chapter 'Condenser coil - level 2).
- Replace the stuffing box packing of the pump after 10000 hours of operation.
- Check the unit operating parameters and compare them with previous values.
- Keep and maintain a maintenance sheet, attached to each HVAC unit.

All these operations require strict observation of adequate safety measures: individual protection garments, compliance with all industry regulations, compliance with applicable local regulations and using common sense.

12.3 - Level 3 (or higher) maintenance (see note below)

The maintenance at this level requires specific skills/approval/tools and know-how and only the manufacturer, his representative or authorised agent are permitted to carry out these operations. These maintenance operations concern for example:
- A major component replacement (compressor, evaporator),
- Any intervention on the refrigerant circuit (handling refrigerant),
- Changing of parameters set at the factory (application change),
- Removal or dismantling of the HVAC unit,
- Any intervention due to a missed established maintenance operation,
- Any intervention covered by the warranty.

Note: Any deviation or non-observation of these maintenance criteria will render the guarantee conditions for the HVAC unit nul and void, and the manufacturer, Carrier France, will no longer be held responsible.

12.4 - Tightening torques for the main electrical connections

Component	Designation in the unit	Value (N·m)
M12 screw on bus bar, customer connection		80
Soldered screw PE, customer connection		80
Tunnel terminal screw, fuse holder	Fu-	3-3.5
Tunnel terminal screw, compressor contactor	KM1-->KM12	3-4.5
Brass screw M6, compressor earth	EC-	5
Screw M6, compressor connection	EC-	5
Tunnel terminal screw, disconnects	QM-	0.8-1.2
Screw M6, earth power distribution		10

12.5 - Tightening torques for the main bolts and screws

Screw type	Used for	Value (N·m)
Metal screw D=4.8	Condensing module, housing supports	4.2
Screw H M8	Condensing module, compressor fixing	18
Taptite screw M10	Condensing module, chassis - structure fixing	30
Taptite screw M6	Piping support, cowling	7
Screw H M8	Piping clip	12
Screw H M6	Piping clip	10
Nut H M10	Compressor chassis	30
Nut M8	Plate heat exchanger fixing (30RB 162-262)	12

12.6 - Condenser coil

We recommend, that finned coils are inspected regularly to check the degree of fouling. This depends on the environment where the unit is installed, and will be worse in urban and industrial installations and near trees that shed their leaves.

For coil cleaning, two maintenance levels are used, based on the AFNOR X60-010 standard:

Level 1
Recommendations for maintenance and cleaning of round tube plate fin (RTPF) condenser coils:

- Regular cleaning of the coil surface is essential for correct unit operation. Eliminating contamination and removal of harmful residue will increase the operating life of the coils and the unit.
- The maintenance and cleaning procedures below are part of the regular maintenance and will prolong the life of the coils.

Removal of fibres that obstruct the surfaces:
Fibres and dirt collected on the coil surface must be removed with a vacuum cleaner. If you do not have a vacuum cleaner, a soft brush with non-metallic bristles can be used instead. In all cases cleaning must be done in the direction of the fins, as the coil surface is easily damaged. The fins bend easily and damage the protective coating of the coil, if cleaning is done at right angles to the fins. Clean against the air flow direction.

NOTE: Using a water jet from a spray hose on a polluted surface will result in fibres and dirt becoming trapped in the coil, making cleaning more difficult. All fibres and dirt must be removed from the surface, before using a low-speed rinsing jet.

Periodical cleaning with clean water:
For coils installed in a coastal or industrial environment periodical cleaning by rinsing with water is beneficial. It is however essential that rinsing is done with a low-speed water jet to avoid damaging the fins. Monthly cleaning as described below is recommended.

ATTENTION

- ***Chemical cleaning agents, water containing bleach, acidic or basic cleaning agents must never be used to clean the coil exterior or interior. These cleaning agents may be difficult to rinse off and can accelerate corrosion at the joint between tube and fins, where two different materials come into contact. If dirt on the coil surface persists, use a Totaline coil cleaner as described above.***
- ***High-speed water from a high-pressure cleaner, spray hose or compressed air cleaner must never be used for coil cleaning. The force of the water or air jet will bend the fins and increase the air-side pressure drop. This can result in reduced performance or nuisance shutdowns of the unit.***

Recommendations for maintenance and cleaning of MCHX (microchannel) condenser coils:

- Regular cleaning of the coil surface is essential for correct unit operation. Eliminating contamination and removal of harmful residue will increase the operating life of the coils and the unit.
- The maintenance and cleaning procedures below are part of the regular maintenance and will prolong the life of the coils.

ATTENTION: Do not use chemical cleaners on MCHX condenser coils. These cleaning agents can accelerate corrosion and damage the coils.

- Remove foreign objects and debris attached to the coil surface or wedged between the chassis and the supports.
- Provide personal protection equipment including safety glasses and/or a face mask, waterproof clothing and safety gloves. It is recommended to wear clothing that covers the whole body.
- Start the high-pressure spray gun and remove any soap or industrial cleaner from it before cleaning the condenser coils. Only drinkable cleaning water is permitted to clean the condenser coils.
- Clean the condenser face by spraying the coil evenly und in a stable manner from bottom to top, directing the water jet at right angles to the coil. Do not exceed 62 bar or an angle of 45° related to the coil. The diffuser must be at least 300 mm away from the coil surface. It is essential to control the pressure and to be careful not to damage the fins.

ATTENTION: Excessive water pressure can break the weld points between the fins and the flat micro-channel tubes.

Level 2
The two cleaning products can be used for any of the following coil finishes: Cu/Cu, Cu/Al, Cu/Al with Polual, Blygold and/or Heresite protection.

Clean the coil, using appropriate products.
We recommend TOTALINE products for coil cleaning:
Part No. P902 DT 05EE: traditional cleaning method
Part No. P902 CL 05EE: cleaning and degreasing.

These products have a neutral pH value, do not contain phosphates, are not harmful to the human body, and can be disposed of through the public drainage system.

Depending on the degree of fouling both products can be used diluted or undiluted.

For normal maintenance routines we recommend using 1 kg of the concentrated product, diluted to 10%, to treat a coil surface of 2 m^2. This process can either be carried out using a high-pressure spray gun in the low-pressure position. With pressurised cleaning methods care should be taken not to damage the coil fins. The spraying of the coil must be done:
- in the direction of the fins
- in the opposite direction of the air flow direction
- with a large diffuser (25-30°)
- at a minimum distance of 300 mm from the coil.

It is not necessary to rinse the coil, as the products used are pH neutral. To ensure that the coil is perfectly clean, we recommend rinsing with a low water flow rate. The pH value of the water used should be between 7 and 8.

For MCHX condenser coils use only clean water with a pH value between 7 and 8.

WARNING: Never use pressurised water without a large diffuser. Do not use high-pressure cleaners for Cu/Cu and Cu/Al coils! High pressure cleaners are only permitted for MCHX coils (maximum permitted pressure 62 bar).

Concentrated and/or rotating water jets are strictly forbidden. Never use a fluid with a temperature above 45°C to clean the air heat exchangers.

Correct and frequent cleaning (approximately every three months) will prevent 2/3 of the corrosion problems.

Protect the control box during cleaning operations.

12.7 - Evaporator maintenance

Check that:
- the insulating foam is intact and securely in place.
- the cooler heaters are operating, secure and correctly positioned.
- the water-side connections are clean and show no sign of leakage.

12.8 - Characteristics of R-410A

See the table below.

Saturated temperatures based on the relative pressure (in kPa)			
Saturated Temp. °C	**Relative pressure, kPa**	**Saturated Temp. °C**	**Relative pressure, kPa**
-20	297	25	1552
-19	312	26	1596
-18	328	27	1641
-17	345	28	1687
-16	361	29	1734
-15	379	30	1781
-14	397	31	1830
-13	415	32	1880
-12	434	33	1930
-11	453	34	1981
-10	473	35	2034
-9	493	36	2087
-8	514	37	2142
-7	535	38	2197
-6	557	39	2253
-5	579	40	2311
-4	602	41	2369
-3	626	42	2429
-2	650	43	2490
-1	674	44	2551
0	700	45	2614
1	726	46	2678
2	752	47	2744
3	779	48	2810
4	807	49	2878
5	835	50	2947
6	864	51	3017
7	894	52	3088
8	924	53	3161
9	956	54	3234
10	987	55	3310
11	1020	56	3386
12	1053	57	3464
13	1087	58	3543
14	1121	59	3624
15	1156	60	3706
16	1192	61	3789
17	1229	62	3874
18	1267	63	3961
19	1305	64	4049
20	1344	65	4138
21	1384	66	4229
22	1425	67	4322
23	1467	68	4416
24	1509	69	4512
		70	4610

Aquasnap Puron units use high-pressure R-410A refrigerant (the unit operating pressure is above 40 bar, the pressure at 35°C air temperature is 50% higher than for R-22). Special equipment must be used when working on the refrigerant circuit (pressure gauge, charge transfer, etc.).

13 - START-UP CHECKLIST FOR 30RB LIQUID CHILLERS (USE FOR JOB FILE)

Preliminary information
Job name:.....
Location:.....
Installing contractor:.....
Distributor:.....
Start-up preformed by:..... Date: .....

Equipment
Model 30RB: ..... S/N .....

Compressors

Circuit A	Circuit B	Circuit C
1. Model #.....	1. Model #.....	1. Model # .....
S/N.....	S/N	S/N .....
2. Model #.....	2. Model #.....	2. Model # .....
S/N.....	S/N	S/N .....
3. Model #.....	3. Model #.....	3. Model # .....
S/N.....	S/N	S/N .....
4. Model #.....	4. Model #.....	4. Model # .....
S/N.....	S/N	S/N .....

Air handling equipment
Manufacturer.....
Model # ..... S/N .....

Additional air handling units and accessories.....
.....

Preliminary equipment check
Is there any shipping damage?..... If so, where?.....
.....
Will this damage prevent unit start-up?.....

☐ Unit is level in its installation
☐ Power supply agrees with the unit name plate
☐ Electrical circuit wiring has been sized and installed properly
☐ Unit ground wire has been connected
☐ Electrical circuit protection has been sized and installed properly
☐ All terminals are tight
☐ All cables and thermistors have been inspected for crossed wires
☐ All plug assemblies are tight

Check air handling systems
☐ All air handlers are operating
☐ All chilled water valves are open
☐ All fluid piping is connected properly
☐ All air has been vented from the system
☐ Chilled water pump is operating with the correct rotation. CWP amperage: Rated:..... Actual.....

Unit start-up

☐ Chilled water pump starter has been properly interlocked with the chiller
☐ Oil level is correct
☐ Unit has been leak checked (including fittings)
☐ Locate, repair, and report any refrigerant leaks
.....
.....
.....

Check voltage imbalance: AB ..... AC..... BC.....
Average voltage = ... (see installation instructions)
Maximum deviation = ... (see installation instructions)
Voltage imbalance = ... (see installation instructions)

☐ Voltage imbalance is less than 2%

warning: Do not start chiller if voltage imbalance is greater than 2%. Contact local power company for assistance.

☐ All incoming power voltage is within rated voltage range

Check evaporator water loop

Water loop volume = ... (litres)
Calculated volume = ... (litres)
3.25 litres/nominal kW capacity for air conditioning
6.5 litres/nominal kW capacity for process cooling

☐ Proper loop volume established
☐ Proper loop corrosion inhibitor included.....litres of.....
☐ Proper loop freeze protection included (if required) .....litres of.....
☐ Water piping includes electric tape heater up to the evaporator
☐ Return water piping is equipped with a screen filter with a mesh size of 1.2 mm

Check pressure drop across the evaporator

Entering evaporator = ... (kPa)
Leaving evaporator = ... (kPa)
Pressure drop (entering - leaving) = ... (kPa)

WARNING: Plot the pressure drop on the evaporator flow/pressure drop curve to determine the flow rate in l/s at the nominal operating conditions for the installation.

If necessary use the control valve to impose the flow rate on the nominal value.

☐ Flow rate from the pressure drop curve, l/s = ...
☐ Nominal flow rate, l/s = ...
☐ The flow rate in l/s is higher than the minimum unit flow rate
☐ The flow rate in l/s corresponds to the specification of ..... (l/s)

Carry out the QUICK TEST function (see 30RB/RQ Pro-Dialog Plus Control manual):

Check and log on to the user menu configuration

Load sequence selection .....
Capacity ramp loading selection .....
Start-up delay .....
Burner section .....
Pump control .....
Set-point reset mode .....
Night-time capacity setback .....

Re-enter the set-points (see Controls section)

To start up the chiller

WARNING: Be sure that all service valves are open, and that the pump is on before attempting to start this machine. Once all checks have been made, start the unit in the "LOCAL ON" position.

Unit starts and operates properly

Temperatures and pressures

WARNING: Once the machine has been operating for a while and the temperatures and pressures have stabilized, record the following:

Evaporator entering water .....
Evaporator leaving water .....
Ambient temperature .....
Circuit A suction pressure .....
Circuit B suction pressure .....
Circuit C suction pressure .....
Circuit A discharge pressure .....
Circuit B discharge pressure .....
Circuit C discharge pressure .....
Circuit A suction temperature .....
Circuit B suction temperature .....
Circuit C suction temperature .....
Circuit A discharge temperature .....
Circuit B discharge temperature .....
Circuit C discharge temperature .....
Circuit A liquid line temperature .....
Circuit B liquid line temperature .....
Circuit C liquid line temperature .....

NOTES:
.....
.....
.....

EUROVENT CERTIFIED PERFORMANCE
www.eurovent-certification.com

www.eurovent-certification.com
www.certiflash.com

Carrier®
Order No: 13439-76, 10.2011 - Supersedes order No: 13439-76, 02.2011.
Manufacturer reserves the right to change any product specifications without notice.
Manufacturer: Carrier SCS, Montluel, France.
Printed in the European Union.