Библиотека СОК

*Installation and maintenance manual*

# VLS / VLC / VLH / VLR
# 524 ÷ 1204

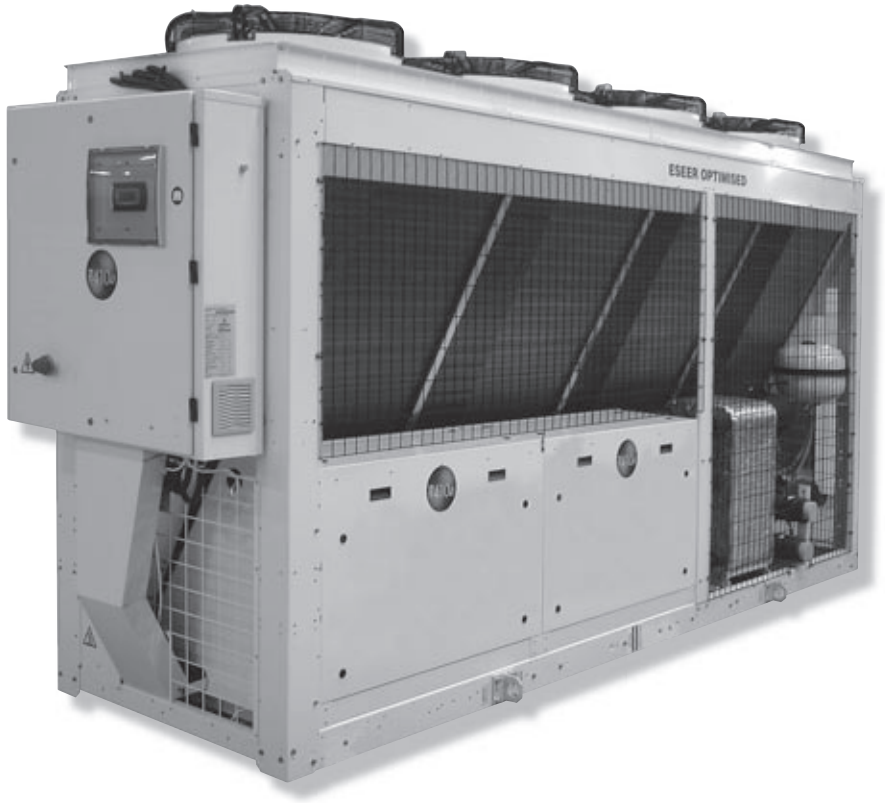


**English**

137 ↓ 308 kW

150 ↓ 336 kW

HFC 410A

**Air cooled water chillers, air cooled condensing units and air-to-water reverse cycle heat pumps**

**IOM VL410-N.1GB**
Date : **July 2007**
Supersedes : **None**

CE

English

## Table of contents


**1 FOREWORD**

1.1 Introduction 3
1.2 Warranty 3
1.3 Emergency stop/ Normal stop 3
1.4 An introduction to this manual 3

**2 SAFETY**

2.1 Foreword 4
2.2 Definitions 4
2.3 Access to the unit 5
2.4 General precautions 5
2.5 Precautions against residual risks 5
2.6 Precautions during maintenance operations 6
2.7 Safety labels 7
2.8 Safety regulations 9

**3 TRANSPORT, LIFTING AND POSITIONING**

3.1 Inspection 12
3.2 Lifting 12
3.3 Anchoring 13
3.4 Storage 13

**4 INSTALLATION**

4.1 Positioning of the unit 14
4.2 Spring Isolator Installation 14
4.3 External hydraulic circuit 15
4.4 Hydraulic connection 16
4.5 Draining the Defrosting Waste Water (for heat pump unit only) 16
4.6 Power supply 17
4.7 Electrical connections 17
4.8 Connecting plate-type evaporator temperature sensors 20
4.9 Total heat recovery features 20

**5 START-UP**

5.1 Preliminary check 21
5.2 Start-up 21
5.3 Checking the operation 22
5.4 Delivery to the customer 22

**6 CONTROL** 23

6.1 Control of VLS/ VLH/ VLC with 4 compressors the chiller contro system 23
6.2 Display 24
6.3 Key board 24
6.4 Protection and safety equipment 27
6.5 SIF version configuration 28

**7 GENERAL DESCRIPTION**

7.1 Introduction 29
7.2 General specifications 29
7.3 Compressors 29
7.4 Refrigeration circuits 29
7.5 Water heat exchanger 29
7.6 Air heat exchanger 30
7.7 Fans 30
7.8 Electric power supply and control system 32
7.9 Accessories 32

**8 TECHNICAL DATA**

8.1 Pressure drop 33
8.2 Technical data 34
8.3 Unit Electrical data 60
8.4 Position of shock absorbers and weight distribution on supports 64
8.5 Overall dimensions 68
8.6 Services spaces 76

**9 MAINTENANCE**

9.1 General requirements 77

9.2 Planned maintenance 77

9.3 Refrigerant charge 78

9.4 Compressor 78

9.5 Condenser 78

9.6 Fans 78

9.7 Dehydrating filter 79

9.8 Sight glass 79

9.9 Thermostatic expansion valve 79

9.10 Evaporator 79

**10 TROUBLESHOOTING** 80

**11 SPARE PARTS**

11.1 Spare parts list 82

11.2 Oil for compressors 82

11.3 Wiring diagram 82

**12 DISMANTLING, DEMOLITION AND SCRAPPING**

12.1 Generalities 83

# 1 FOREWORD

## 1.1 Introduction

Itelco-Industry units, manufactured to state-of-the-art design and implementation standards, ensure top performance, reliability and fitness to any type of air-conditioning systems.

These units are designed for cooling water or glyco-led water (and for water heating in heat pump models) and are unfit for any purposes other than those specified in this manual.

This manual includes all the information required for a proper installation of the units, as well as the relevant operating and maintenance instructions.

It is therefore recommended to read this manual carefully before installation or any operation on the machine. The chiller installation and maintenance must be carried out by skilled personnel only (where possible, by one of Itelco-Industry's Authorised Service Centers).

The manufacturer may not be held liable for any damage to people or property caused by improper installation, start-up and/ or improper use of the unit and/ or failure to implement the procedures and instructions included in this manual.

## 1.2 Warranty

These units are delivered complete, tested and ready for being operated. Any form of warranty will become null and void in the event that the appliance is modified without Itelco-Industry's preliminary written authorisation.

This warranty shall apply providing that the installation instructions have been complied with (either issued by Itelco-Industry, or deriving from the current practice), and the Form 1 ("Start-up") has been filled-in and mailed to Itelco-Industry (attn. After-Sales Service).

In order for this warranty to be valid, the following conditions shall be met:

- The machine must be operated only by skilled personnel from Itelco-Industry's Authorised After-Sales Service.
- Maintenance must be performed only by skilled personnel - from one of Itelco-Industry's Authorised After-Sales Centers.
- Use only original Itelco-Industry spare parts.
- Carry out all the planned maintenance provided for by this manual in a timely and proper way.

Failure to comply with any of these conditions will automatically void the warranty.

## 1.3 Emergency stop / Normal stop

The emergency stop of the unit can be enabled using the master switch on the control panel (move down the lever).

For a normal stop, press the relevant push-buttons.

To restart the appliance, follow the procedure detailed in this manual.

## 1.4 An introduction to the manual

For safety reasons, it is imperative to follow the instructions given in this manual. In case of any damage caused by non-compliance with these instructions, the warranty will immediately become null and void.

Conventions used throughout the manual:




The Danger sign recalls your attention to a certain procedure or practice which, if not followed, may result in serious damage to people and property.




The Warning sign precedes those procedures that, if not followed, may result in serious damage to the appliance.




The Notes contain important observations.




The Useful Tips provide valuable information that optimises the efficiency of the appliance.

This manual and its contents, as well as the documentation which accompanies the unit, are and remain the property of Itelco-Industry, which reserves any and all rights thereon. This manual may not be copied, in whole or in part, without Itelco-Industry's written authorization.

# 2 SAFETY

## 2.1 Foreword

**These units must be installed in conformity with the provisions of Machinery Directive 98/37/EC, Low Voltage Directive 73/23/EC, Pressure Vessels Directive 97/23/EC, Electromagnetic Interference Directive 89/336/EC, as well as with other regulations applicable in the country of installation. If these provisions are not complied with, the unit must not be operated.**




**The unit must be grounded, and no installation and/or maintenance operations may be carried out before deenergising the electrical panel of the unit.**

Failure to respect the safety measures mentioned above may result in electrocution hazard and fire in the presence of any short-circuits.




**Inside the heat exchangers, the compressors and the refrigeration lines, this unit contains liquid and gaseous refrigerant under pressure. The release of this refrigerant may be dangerous and cause injuries.**




**The units are not designed to be operated with natural refrigerants, such as hydrocarbons. Itelco-Industry may not be held liable for any problems deriving from the replacement of original refrigerant or the introduction of hydrocarbons.**

Itelco-Industry units are designed and manufactured according to the requirements of European Standard PED 97/23/EC (pressure vessels).

– The used refrigerants are included in group II (non-hazardous fluids).
– The maximum working pressure values are mentioned on the unit's data plate.
– Suitable safety devices (pressure switches and safety valves) have been provided, to prevent any anomalous overpressure inside the plant.
– The vents of the safety valves are positioned and oriented in such a way as to reduce the risk of contact with the operator, in the event that the valve is operated. Anyway, the installer will convey the discharge of the valves far from the unit.
– Dedicated guards (removable panels with tools) and danger signs indicate the presence of hot pipes or components (high surface temperature).




**The guards of the fans (only for units provided with air heat exchangers) must be always mounted and must never be removed before de-energising the appliance.**




**It is the User's responsibility to ensure that the unit is fit for the conditions of intended use and that both installation and maintenance are carried out by experienced personnel, capable of respecting all the recommendations provided by this manual. It is important that the unit is adequately supported, as detailed in this manual. Non-compliance with these recommendations may create hazardous situations for the personnel.**




**The unit must rest on a base which meets the characteristics specified in this manual; a base with inadequate characteristics is likely to become a source of serious injury to the personnel.**




The unit has not been design to withstand loads and/or stress that may be transmitted by adjacent units, piping and/or structures. Each external load or stress transmitted to the unit may break or cause breakdowns in the unit's structure, as well as serious dangers to people. In these cases, any form of warranty will automatically become null and void.




The packaging material must not be disposed of in the surrounding environment or burnt.

## 2.2 Definitions

OWNER: means the legal representative of the company, body or individual who owns the plant where Itelco-Industry unit has been installed; he/she has the responsibility of making sure that all the safety regulations specified in this manual are complied with, along with the national laws in force.

INSTALLER: means the legal representative of the company who has been given by the owner the job of positioning and performing the hydraulic, electric and other connections of Itelco-Industry unit to the plant: he/she is responsible for handling and properly installing the appliance, as specified in this manual and according to the national regulations in force.

OPERATOR: means a person authorised by the owner to do on Itelco-Industry unit all the regulation and control operations expressly described in this manual, that must be strictly complied with, without exceeding the scope of the tasks entrusted to him.

ENGINEER: means a person authorised directly by Itelco-Industry or, in all EC countries, excluding Italy, under his full responsibility, by the distributor of Itelco-Industry product, to perform any routine and extraordinary maintenance operations, as well as any regulation, control, servicing operations and the replacement of pieces, as may be necessary during the life of the unit.

## 2.3 Access to the unit

The unit must be placed in an area which can be accessed also by OPERATORS and ENGINEERS; otherwise the unit must be surrounded by a fence at not less than 2 meters from the external surface of the machine.

OPERATORS and ENGINEERS must enter the fenced area only after wearing suitable clothing (safety shoes, gloves, helmet etc.). The INSTALLER personnel or any other visitor must always be accompanied by an OPERATOR.

For no reason shall any unauthorised personnel be left alone in contact with the unit.

## 2.4 General precautions

The OPERATOR must simply use the controls of the unit; he must not open any panel, other than the one providing access to the control module.

The INSTALLER must simply work on the connections between plant and machine; he must not open any panels of the machine and he must not enable any control.

When you approach or work on the unit, follow the precautions listed below:

- do not wear loose clothing or jewellery or any other accessory tat may be caught in moving parts
- wear suitable personal protective equipment (gloves, goggles etc.) when you have to work in the presence of free flames (welding operations) or with compressed air
- if the unit is placed in a closed room, wear ear protection devices
- cut off connecting pipes, drain them in order to balance the pressure to the atmospheric value before disconnecting them, disassemble connections, filters, joints or other line items
- do not use your hands to check for any pressure drops
- use tools in a good state of repair; be sure to have understood the instructions before using them
- be sure to have removed all tools, electrical cables and any other objects before closing and starting the unit again

## 2.5 Precautions against residual risks

### Prevention of residual risks caused by the control system

- be sure to have perfectly understood the operating instructions before carrying out any operation on the control panel
- when you have to work on the control panel, keep always the operating instructions within reach
- start the unit only after you have checked its perfect connection to the plant
- promptly inform the ENGINEER about any alarm involving the unit
- do not reset manual restoration alarms unless you have identified and removed their cause

### Prevention of residual mechanical risks

- install the unit according to the instructions provided in this manual
- carry out all the periodical maintenance operations prescribed by this manual
- wear a protective helmet before accessing the interior of the unit
- before opening any panelling of the machine, make sure that it is secured to it by hinges
- do not touch air condensation coils without wearing protective gloves
- do not remove the guards from moving elements while the unit is running
- check the correct position of the moving elements' guards before restarting the unit

### Prevention of residual electrical risks

- connect the unit to the mains according to the instructions provided in this manual
- periodically carry out all the maintenance operations specified by this manual
- disconnect the unit from the mains by the external disconnecting switch before opening the electrical board
- check the proper grounding of the unit before start-up
- check all the electrical connections, the connecting cables, and in particular the insulation; replace worn or damaged cables

- periodically check the board's internal wiring
- do not use cables having an inadequate section or flying connections, even for limited periods of time or in an emergency

### Prevention of other residual risks

- make sure that the connections to the unit conform to the instructions provided in this manual and on the unit's panelling
- if you have to disassemble a piece, make sure that it has been properly mounted again before restarting the unit
- do not touch the delivery pipes from the compressor, the compressor and any other piping or component inside the machine before wearing protective gloves
- keep a fire extinguisher fir for electrical appliances near the machine
- on the units installed indoor, connect the safety valve of the refrigeration circuit to a piping network that can channel any overflowing refrigerant outside
- remove and leak of fluid inside and outside the unit
- collect the waste liquids and dry any oil spillage
- periodically clean the compressor compartment, to remove any fouling
- do not store flammable liquids near the unit
- do not disperse the refrigerant and the lubricating oil into the environment
- weld only empty pipes; do not approach flames or other sources of heat to refrigerant pipes
- do not bend/ hit pipes containing fluids under pressure

## 2.6 Precautions during maintenance operations

Maintenance operations can be carried out by authorised technicians only.
Before performing any maintenance operations:

- disconnect the unit from the mains with the external disconnecting switch
- place a warning sign "do not turn on - maintenance in progress" on the external disconnecting switch
- make sure that on-off remote controls are inhibited
- wear suitable personal protective equipment (helmet, safety gloves, goggles and shoes etc.)

To carry out any measurements or checks which require the activation of the machine:

- work with the electrical board open only for the necessary time
- close the electrical board as soon as the measurement or check has been completed
- for outdoor units, do not carry out any operations in the presence of dangerous climatic conditions (rain, snow, mist etc.)

The following precautions must be always adopted:

- do not scatter the fluids of the refrigeration circuit in the surrounding environment
- when replacing an eprom or electronic cards, use always suitable devices (extractor, antistatic bracelet, etc.)
- to replace a compressor, the evaporator, the condensing coils or any other weighty element, make sure that the lifting equipment is consistent with the weight to be lifted
- in air units with independent compressor compartment, do not access the fan compartment unless you have disconnected the machine by the disconnecting switch on the board and you have placed a warning sign "do not turn on - maintenance in progress"
- contact Itelco-Industry for any modifications to the refrigeration, hydraulic or wiring diagram of the unit, as well as to its control logics
- contact Itelco-Industry if it is necessary to perform very difficult disassembly and assembly operations
- use only original spare parts purchased directly from Itelco-Industry or the official retailers of the companies on the recommended spare parts list
- contact Itelco-Industry if it is necessary to handle the unit one year after its positioning on site or if you wish to dismantle it.

## 2.7 Safety labels

The labels below will be affixed to each unit in the indicated point:




**Identification of the refrigerant - External door**




**Identification of the unit -
Outside, on the right-hand front column**

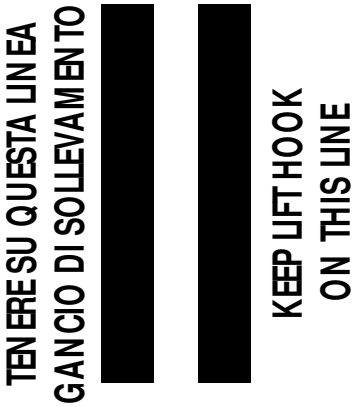


**Gravity centre - Base**

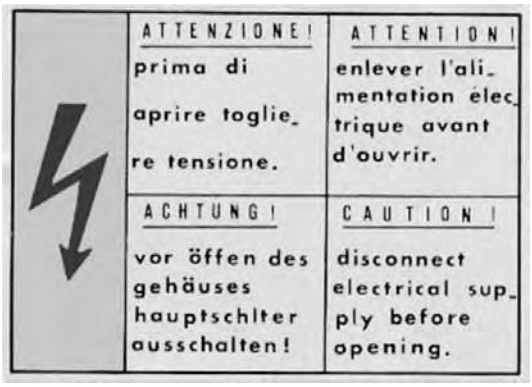


**Electrical warning
Adjacent to the master switch**

**ATTENZIONE**

**INSERIRE LE RESISTENZE DI RISCALDAMENTO OLIO ALMENO 12 ORE PRIMA DI OGNI AVVIAMENTO (SE PREVISTE).**

**PRIMA DELLA MESSA IN TENSIONE ASSICURARSI CHE LE VITI DEI CIRCUITI ELETTRICI SIANO SERRATE COMPLETAMENTE.**

**WARNING**

**ENERGIZE THE CRANCKCASE HEATER FOR AT LEAST 12 HOURS BEFORE EACH STARTING (IF FITTED).**

**BEFORE TIGHTENING-UP, TO TIGHTEN ALL TERMINAL SCREWS ESPECIALLY THOSE IN MAIN CIRCUIT.**

881000215/B

**Start-up warning - Outside the door of the electrical board**

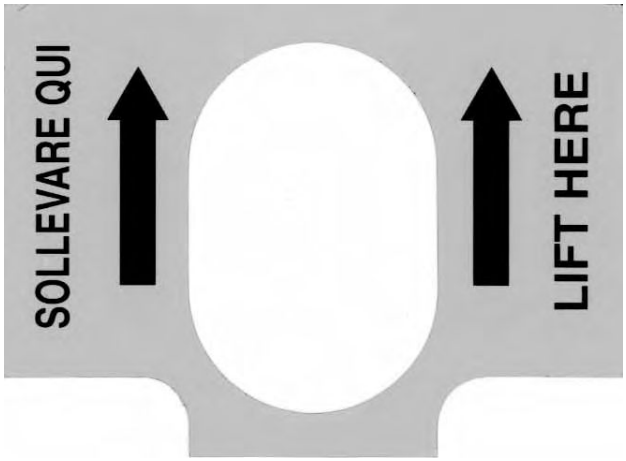


**Lifting point - Base**

CERTIFICATO DI COLLAUDO PRODUZIONE ITELCO-CLIMA
ITELCO-CLIMA PRODUCTION TEST CERTIFICATE
UNITA' ARIA-ARIA/ARIA-ACQUA - SEMICENTRALI- CHILLER AIR/AIR AIR/WATER

| PROGR. COLL. NUMBER CHECK | DESCRIZIONE DEI TEST DESCRIPTION OF QUALITY CHECK | TIMBRO OPERAT. INSP. CODE |
|---|---|---|
| 01 | VERIFICA ASSEMBLAGGIO<br>VERIFY ASSEMBLY COMPLETE | |
| 02 | VERIFICA VISIVA CABLAGGIO COLLEG. ELETTRICI E CONNESSIONE<br>VERIFY WIRING CONNECTIONS | |
| 03 | VUOTO E CARICA<br>REF. VACUUM AND CHARGE TEST | |
| 04 | VERIFICA CON CERCAFUGHE TENUTA CIRCUITO FRIGORIFERO<br>REFRIGERANT LEAK TEST | |
| 05 | PROVE FUNZIONALI CON RILIEVI TEMPERATURE/PRESSIONI-RUMORE<br>FUNCTION AND RUN TEST NOISE TEST | |
| 06 | VERIFICA INTERVENTI SICUREZZE PRESSIONE E TEMPERATURA<br>CHECK OPERATION AND SAFETY DEVICES | |
| 07 | VERIFICA TENUTA CIRCUITO IDR. E FUNZIONAMENTO POMPA (SU PACK)<br>HYDRAULIC CIRCUIT TEST (PUMP CHECK ONLY FOR PACK UNIT) | |
| 08 | VERIFICA MONTAGGIO ACCESSORI (SE PREVISTI) E DOCUMENTAZIONE<br>CHECK ACCESSORIES/DOCUMENTATION | |
| 09 | CONTROLLO ESTETICO FINALE E PULIZIA INTERNA<br>VISUAL CHECK FOR DIRT AND DAMAGE | |

**Final Test Certificate - Inside the external door**

**EIN - INLET**

**ENTRÉE - ENTRATA**

**AUS - OUTLET**

**SORTIE - USCITA**

**Fitting identification - Adjacent to fittings**



**Grounding connection - On the electrical board, adjacent to the connection**

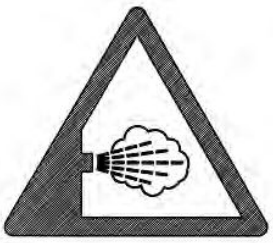

**Warning - safety valves' vents**



**Warning - high-temperature zones Adjacent to hot pipes or components**

## 2.8 Safety regulations

| Refrigerant data | Safety data: R410A |
|---|---|
| Toxicity | Low |
| Contact with skin | If sprayed, the refrigerant is likely to cause frost burns. If absorbed by the skin, the danger is very limited; it may cause a slight irritation, and the liquid is degreasing. Unfreeze the affected skin with water. Remove the contaminated clothes with great care - in the presence of frost burns, the clothes may stick to the skin. Wash with plenty of warm water the affected skin.<br>In the presence of symptoms such as irritation or blisters, obtain medical attention. |
| Contact with eyes | Vapours do not cause harmful effects. The spraying of refrigerant may cause frost burns. Wash immediately with a proper solution or with tap water for at least 10 minutes, and then obtain medical attention. |
| Ingestion | Very unlikely - should something happen, it will cause frost burns.<br>Do not induce vomiting. Only if the patient is conscious, wash out mouth with water and give some 250 ml of water to drink. Then, obtain medical attention. |
| Inhalation | R410A: remarkable concentrations in the air may have an anaesthetic effect, up to fainting. The exposure to considerable amounts may cause irregular heartbeat, up to the sudden death of the patient. Very high concentrations may result in the risk of asphyxia, due to the reduction in the oxygen percentage in the atmosphere. Remove the patient to fresh air and keep warm and at rest.<br>If necessary, give oxygen. In case of breathing difficulties or arrest, proceed with artificial respiration. In case of cardiac arrest, proceed with cardiac massage. Then, obtain medical attention. |
| Recommendations | Semiotics or support therapy is recommended. Cardiac sensitisation has been observed that, in the presence of circulating catecholamines such as adrenalin, may cause cardiac arrhythmia and accordingly, in case of exposure to high concentrations, cardiac arrest. |
| Prolonged exposure | R410A: a study on the effects of exposure to 50,000 ppm during the whole life of rats has identified the development of benign testicle tumour. This situation should therefore be negligible for personnel exposed to concentrations equal to or lower than professional levels. |
| Professional levels | R410A: Recommended threshold: 1000 ppm v/v - 8 hours TWA. |
| Stability | R410A: Not specified |
| Conditions to avoid | Do not use in the presence of flames, burning surfaces and excess humidity. |
| Hazardous reactions | May react with sodium, potassium, barium and other alkaline metals.<br>Incompatible substances: magnesium and alloys with magnesium concentrations > 2%. |
| Hazardous decomposition products | R410A: Halogen acids produced by thermal decomposition and hydrolysis. |

| | |
|---|---|
| General precautions | Do not inhale concentrated vapours. Their concentration in the atmosphere should not exceed the minimum preset values and should be maintained below the professional threshold. Being more weighty than the air, the vapour concentrates on the bottom, in narrow areas. Therefore, the exhaust system must work at low level. |
| Respiratory system protection | If you are in doubt about the concentration in the atmosphere, it is recommended to wear a respirator approved by an accident-prevention Authority, of the independent or oxygen type. |
| Storage | Cylinders must be stored in a dry and fresh place, free from any fire hazard, far from direct sunlight or other sources of heat, radiators etc. Keep a temperature below 45°C. |
| Protective clothing | Wear overalls, protective gloves and goggles or a mask. |
| Accidental release measures | It is important to wear protective clothing and a respirator. Stop the source of the leak, if you can do this without danger. Negligible leaks can be left evaporating under the sun, providing that the room is well ventilated. Considerable leaks: ventilate the room. Reduce the leak with sand, earth or other absorbing substances. Make sure that the liquid does is not channelled into gutters, sewers or pits where the vapours are likely to create a stuffy atmosphere. |
| Disposal | The best method is recovery and recycling. If this method is not practicable, dispose according to an approved procedure, that shall ensure the absorption and neutralization of acids and toxic agents. |
| Fire fighting information | R410A: Not flammable in the atmosphere. |
| Cylinders | The cylinders, if exposed to fire, shall be cooled by water jets; otherwise, if heated, they may explode. |
| Protective fire fighting equipment | In case of fire, wear an independent respirator and protective clothing. |

| Lubricant oil data | Safety data: Polyester oil (POE) |
|---|---|
| Classification | Not harmful |
| Contact with skin | May cause slight irritation. Does not require first aid measures. It is recommended to follow usual personal hygiene measures, including washing the exposed skin with soap and water several times a day. It is also recommended to wash your overalls at least once a week. |
| Contact with eyes | Wash thoroughly with a suitable solution or tap water. |
| Ingestion | Seek medical advice immediately. |
| Inhalation | Seek medical advice immediately. |
| Conditions to avoid | Strong oxidising substances, caustic or acid solutions, excess heat. May corrode some types of paint or rubber. |
| Protection of the respiratory system | Use in well ventilated rooms. |
| Protective clothing | Always wear protective goggles or a mask. Wearing protective gloves is not mandatory, but is recommended in case of prolonged exposure to refrigerant oil. |
| Accidental release measures | It is important to wear protective clothing and, especially, goggles. Stop the source of the leak. Reduce the leak with absorbing substances (sand, sawdust or any other absorbing material available on the market). |
| Disposal | The refrigerant oil and its waste will be disposed of in an approved incinerator, in conformity with the provisions and the local regulations applicable to oil waste. |
| Fire fighting information | In the presence of hot liquid or flames, use dry powder, carbon dioxide or foam. If the leak is not burning, use a water jet to remove any vapours and to protect the personnel responsible for stopping the leak. |
| Cylinders | The cylinders exposed to a fire will be cooled with water jets in case of fire. |
| Fire fighting protective equipment | In case of fire, wear an independent respirator. |

# 3 TRANSPORT, LIFTING AND POSITIONING

Refrigerators are supplied assembled (apart from standard antivibrating rubber supports, that will be installed on site). The equipment are full of refrigerant and oil, in the quantity required for a proper operation.

## 3.1 Inspection

When the unit is delivered, it is recommended to check it carefully and to identify any damage occurred during transportation. The goods are shipped ex-factory, at the buyer's risk. Check that the delivery includes all the components listed in the order.

In case of damage, note it down on the carrier's delivery note and issue a claim according to the instructions provided in the delivery note.

In the presence of any serious damage, that does not affect the surface only, it is recommended to inform Itelco-Industry immediately.

Please note that Itelco-Industry may not be held liable for any damage to the equipment during transportation, even though the carrier has been appointed by the factory.

## 3.2 Lifting

The unit must be lifted by using the hooks inserted into the relevant eyebolts (see the figure).

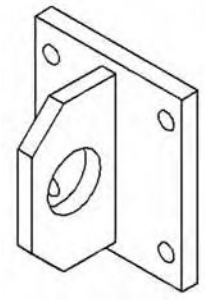

It is recommended to use a spacer to prevent cables from damaging the unit (see the figure).

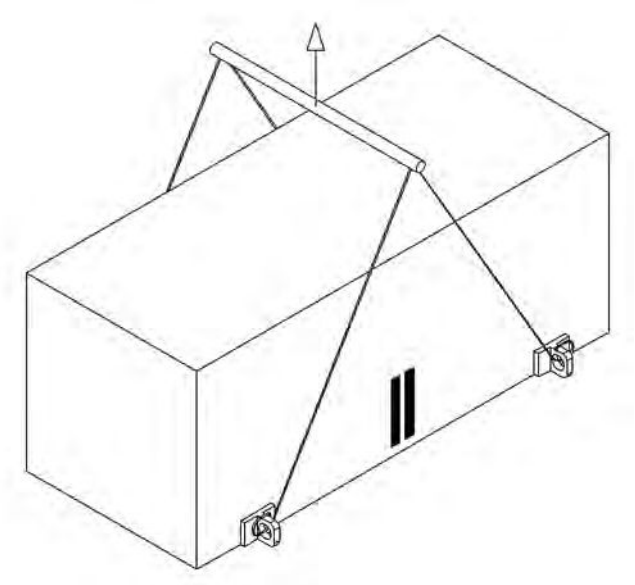

Before positioning the unit, make sure that the place of installation is appropriate and sturdy enough to hold the weight and to withstand the stress caused by the operation of the whole assembly.




Do not displace the unit on rollers, and do not lift it with a lift truck.

**Unit must be lifted carefully.**
**To lift unit slowly and regularly.**

To lift and displace the unit:

- Insert and secure eyebolts into the holes marked on the frame.
- Insert spacer between cables.
- Hook near the barycentre of the unit.
- The cables must be long enough to form, if tensioned, an angle of at least 45° with respect to the horizontal plane.




For lifting operations, use only tools and material fit for this purpose, in accordance with accident-prevention regulations.




During the lifting and handling of the unit, be careful not to damage the finned pack of the coils positioned on the sides of the unit. The sides of the unit must be protected by cardboard or plywood sheets.




It is recommended not to remove the protective plastic envelope, that should prevent scraps from penetrating into the appliance and any damage to the surfaces, until the unit is ready for operation.




The lifting eyebolts protrude from the base of the unit; it is therefore recommended to remove them once the unit has been lifted and positioned, if in your opinion they are likely to become a source of hazard and injury.

The eyebolts must be mounted on the unit whenever it shall be displaced and then lifted again.

## 3.3 Anchoring

It is not essential to secure the unit to the foundations, unless in areas where there is a serious risk of earthquake, or if the appliance is installed on the top of a steel frame.

## 3.4 Storage

When the unit is to be stored before installation, adopt a few precautions to prevent any damage or risk of corrosion or wear:

- plug or seal every single opening, such as water fittings
- do not store the appliance in a room where the temperature exceeds 50°C for the units using R410A and, if possible, do not expose to direct sunlight
- it is recommended to store the unit in a roof where traffic is minimized, to prevent the risk of accidental damage
- the unit must not be washed with a steam jet
- take away and leave to the site manager all the keys providing access to the control board

Finally, it is recommended to carry out visual inspections at regular intervals.

# 4 INSTALLATION

## 4.1 Positioning of the unit




Before installing the unit, make sure that the structure of the building and/ or the supporting surface can withstand the weight of the appliance. The weights of the units are listed in Chapter 8 of this manual.

These units have been designed for outdoor installation on a solid surface. Standard accessories include antivibrating rubber supports, that must be positioned under the base.

When the unit is to be installed on the ground, it is necessary to provide a concrete base, to ensure a uniform distribution of the weights.

As a general rule, no special sub-bases are required. However, if the unit is to be installed on the top of inhabited rooms, it is advisable to rest it on spring shock absorbers (optional), that will minimise the transmission of any vibration to the structures.

To choose the place of installation of the unit, bear in mind that:

- the longitudinal axis of the unit must be parallel to the direction of prevailing winds, so as to ensure a uniform distribution of the air on finned exchangers
- the unit must not be installed near boilers' vent pipes
- the unit must not be installed leeward with respect to sources of air contaminated by greases, such as, for example, the outlets to kitchen exhaust hoods into the atmosphere. Otherwise, the grease is likely to deposit on the fins of the refrigerant/ air exchangers, and would fix every type of atmospheric impurity, resulting in the quick clogging of the exchangers
- the unit must not be installed in areas subject to considerable snow falling
- the unit must not be installed in areas subject to flooding, under gutters etc.
- the unit must not be installed in air shafts, narrow courts or other small places, where the noise may be reflected by the walls or the air ejected by fans may short-circuit itself on refrigerant/ air heat exchangers or condenser
- the place of installation must be have all the necessary spaces for air circulation and maintenance operations (see Chapter 8).

## 4.2 Spring Isolator Installation

- Prepare the base, that must be flat and plane.
- Lift the appliance and insert shock absorbers as follows:

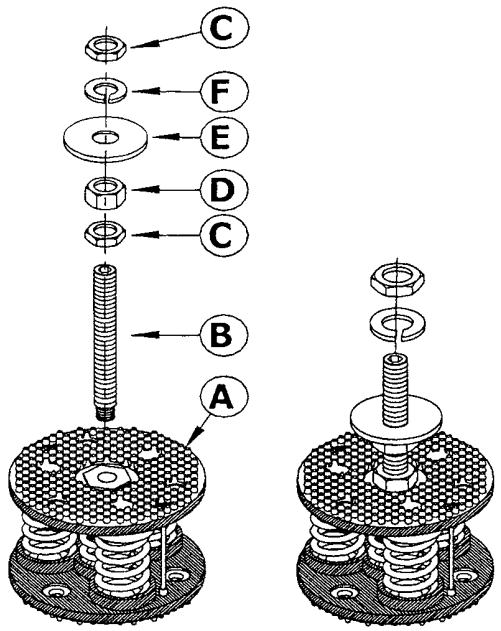


1) Proceed to assemble the jack components.

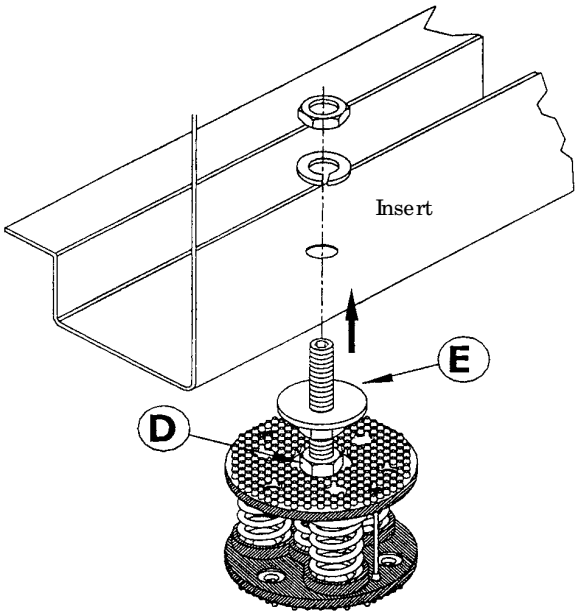

2) Fit the jack in the threaded housing on the upper plate of the antivibration mount. Next fit the jack mounted on the antivibration mount in the hole in the machine base.

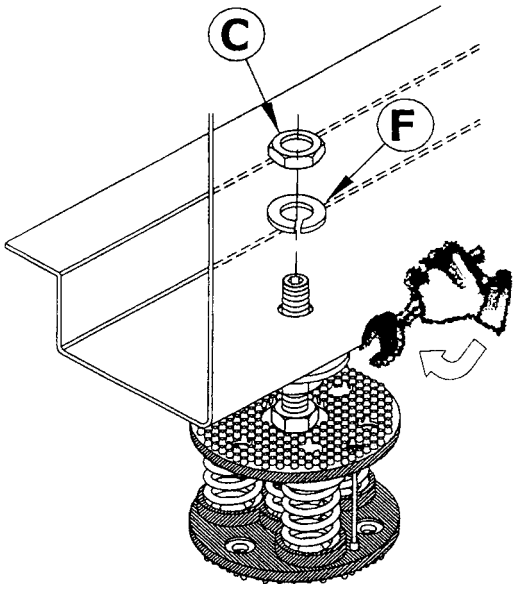


3) Make sure the machine base is resting on the flat washer (pos. E) of the jack. To offset any levelling problems, adjust the top nut (pos.D) using an adeguate spanner. Lock in position with grower washer (pos.F) and low nut (pos.C).

At the end of this operation, make sure the machine is elastic on the axes and compensating antivibration joints can be fitted in the water connections.

## 4.3 External hydraulic circuit




The external hydraulic circuit must ensure the water flow to the evaporator under any working or adjustment conditions.

The external hydraulic circuit should consist of the following elements:

- A circulation pump that can ensure the necessary capacity and discharge head.
- The capacity of the primary hydraulic circuit should not be less than 7.5 litres/ KW of cooling capacity, in order to prevent the repeated start-up of the compressor and any damage to it. If the water capacity in the primary piping of the circuit and in the evaporator is lower than this value, an insulated storage tank shall be installed.
- A membrane expansion vessel provided with safety valve with vent, that must be visible.




The capacity of the expansion vessel must allow for an expansion of at least 2% of the volume of the fluid in the circuit (evaporator, piping, user circuit and standby tank, if any). The expansion vessel needs not be isolated, because no water can circulate inside it.

- A flow switch, to disable the appliance when the water is not circulating.




The flow switch must be connected (terminals 1-2) as shown in the wiring diagram of the "User's Terminal Box" (Paragraph 4.7).

**To install the flow switch, follow the manufacturer's instructions.**

As a general rule, the flow switch shall be mounted on a horizontal pipe, at a distance from the curves equal to 10 times the diameter of the pipe and far from valves or other components that are likely to hinder the water flow upstream of or downstream from the flow switch.

- The bleed valves must be mounted on the highest point of the piping.
- The stop valves must be mounted on the piping of the water entering/ leaving the condenser.
- The discharge points (provided with plugs, cocks etc.) must be arranged in the lowest point of the piping.

Then:

- Provide the evaporator with a by-pass circuit equipped with a valve to wash the plant.
- Insulate the piping, to prevent the risk of heat loss.
- Position a filter on the suction side of the evaporator of the heat recovery condenser.

**Installation Flow Switch**

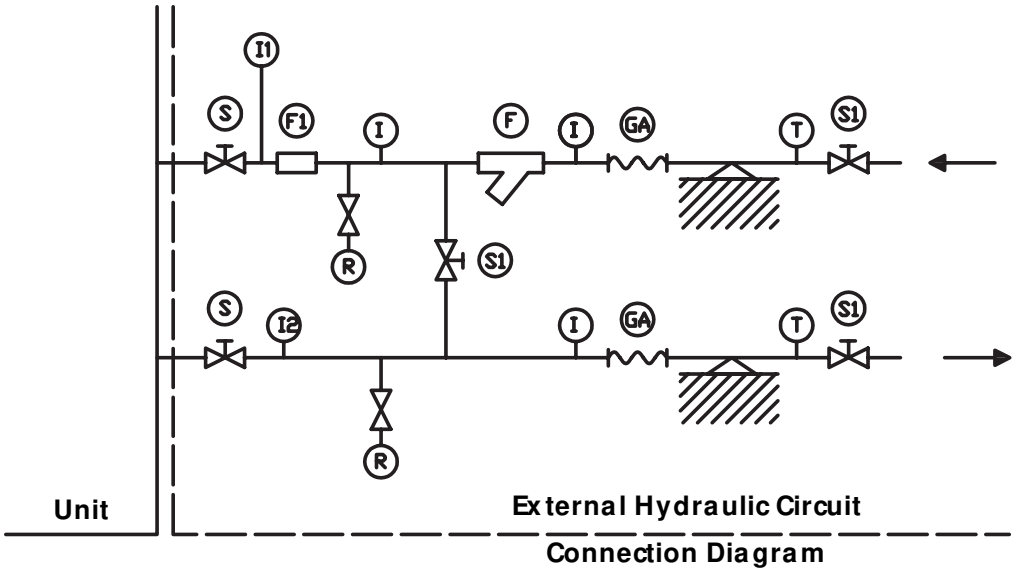


**Connection Diagram**

**Legends:**

I: Pressure gauge connection
S: Gate valve
F1: Flow Switch
GA: Flexible hoses
R: Drain cock
T: Thermometer
F: Filter
I1 / I2: Pressure gauge connection to measure pressure drop or head pressure

WARNING

Before filling the circuit, it is important to check that it is free from any foreign matter, sand, gravels, rust, welding deposits, waste and other materials that may damage the evaporator.

When cleaning the lines, it is recommended to create a circuit by-pass. It is important to mount a filtering medium (30 mesh) upstream of the chiller.

NOTE

If necessary, the water required to fill the circuit must be treated to obtain the requested PH.

## 4.4 Hydraulic connection

The water inlet/ outlet fittings shall conform to the instructions provided by the plates affixed near the connection points.

## 4.5 Draining the defrosting waste water (for heat pump unit only)

When heat pump units work in heating mode, during defrosting cycles, they may discharge water from the base. This is why the units should be installed at least 200 mm above the floor level, so as to allow the free drainage of waste water, without the risk of producing ice banks.

The heat pump units must be installed in positions where the defrosting water cannot create any damage.

## 4.6 Power supply




**Before carrying out any operations on the electrical system, make sure that the unit is deenergised.**




**It is important that the appliance is grounded.**




The company in charge of the installation shall conform to the standards applicable to outdoor electrical connections.

**Itelco-Industry may not be held liable for any damage and/ or injury caused by failure to comply with these precautions.**

The unit conforms to EN 60204-1.

The following connections shall be provided:

- A 3-phase and grounding connection for the power supply circuit.
- The electrical distribution system shall meet the power absorbed by the appliance.
- The disconnecting and magnetothermal switches must be sized to control the starting current of the unit.
- The power supply lines and the insulation devices must be designed in such a way that every line independent.
- It is recommended to install differential switches, to prevent any damage caused by phase drops.
- The fans and compressors are supplied through contactors controlled from the control panel.
- Each motor is provided with an internal safety thermal device and external fuses.
- The power supply cables must be inserted into dedicated openings on the front of the unit, and the will enter the electrical board through holes drilled on the bottom of the board.

## 4.7 Electrical connections

**The unit must be installed on site according to the Machinery Directive (98/ 37/ EC), the Low Voltage Directive (73/ 23/ EC), the Electromagnetic Interference Directive (89/ 336/ EC) and the usual procedures and standards applicable in the place of installation. The unit must not be operated if its installation has not been carried out according to the instructions provided in this manual.**

**The power supply lines must consist of insulated copper conductors, dimensioned for the maximum absorbed current.**

Connection to terminals must be performed according to the diagram of connections (User's Terminal Box) provided in this manual and according to the wiring diagram which accompanies the unit.




Before connecting the power supply lines, check that the available voltage value does not exceed the range specified in the Electric Data (Chapter 8).

For 3-phase systems, check also that the unbalance between the phases does not exceed 2%. To perform this check, measure the differences between the voltage of each phase couple and their mean value during operation. The maximum % value of these differences (unbalance) must not exceed 2% of the mean voltage.

If the unbalance is unacceptable, contact the Energy Distributor to solve this problem.




Supplying the unit through a line whose unbalance exceeds the permissible value will automatically void the warranty.

## VLS/ VLH/ VLC Version – Electrical Connections

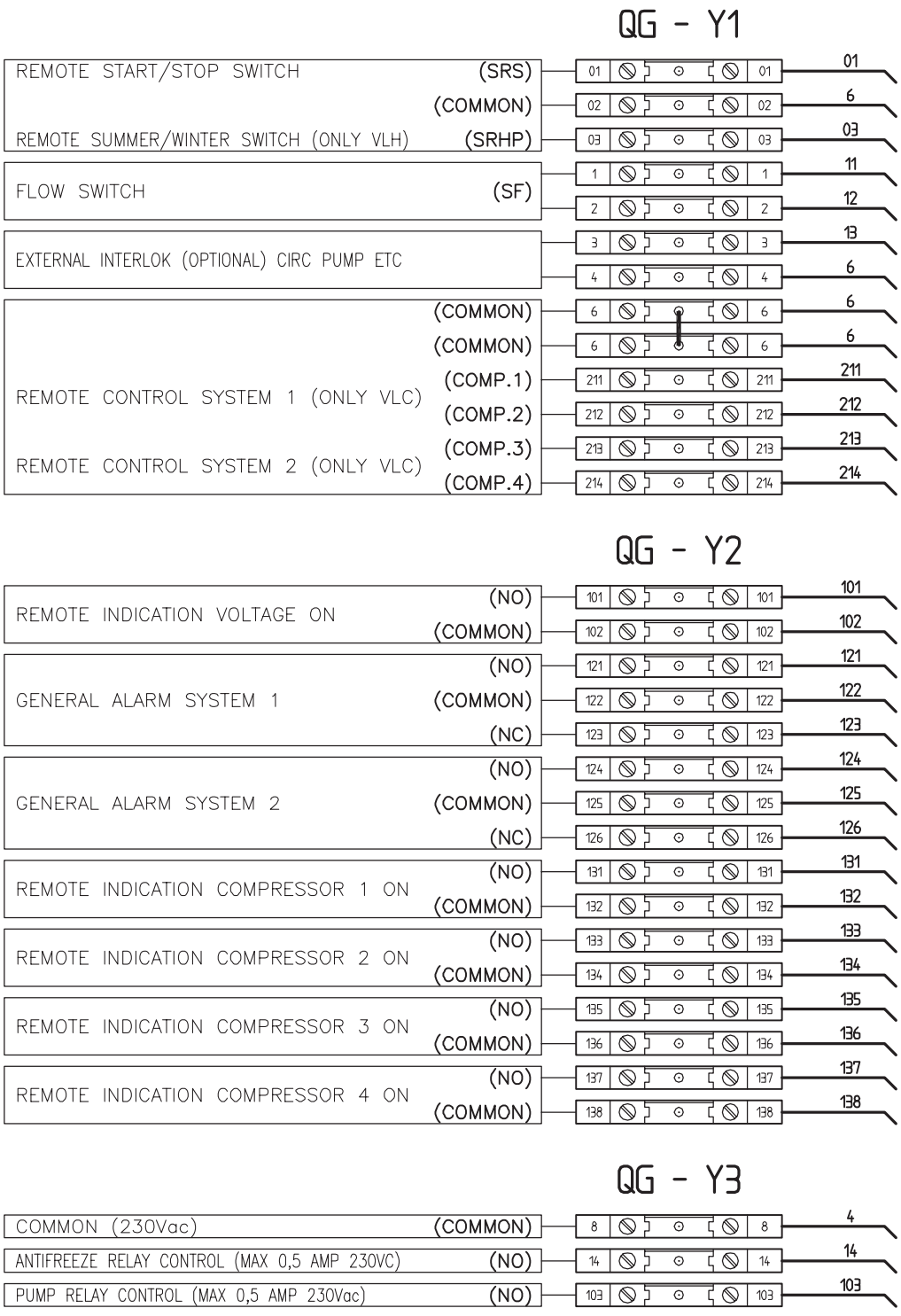

## VLR Version – Electrical Connections

### QG - Y1

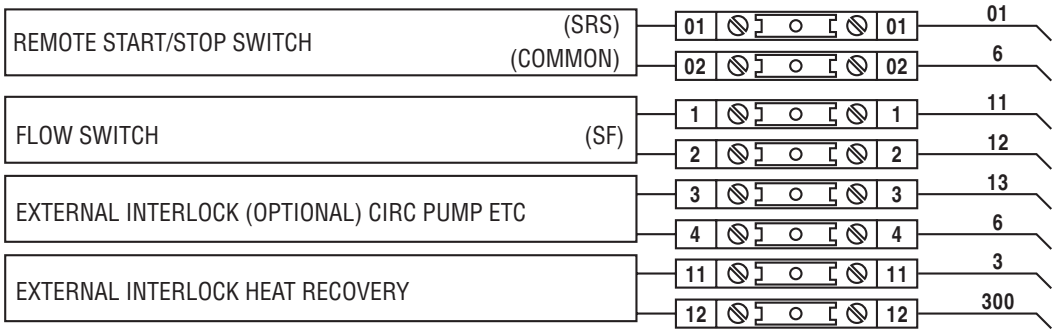


### QG - Y2

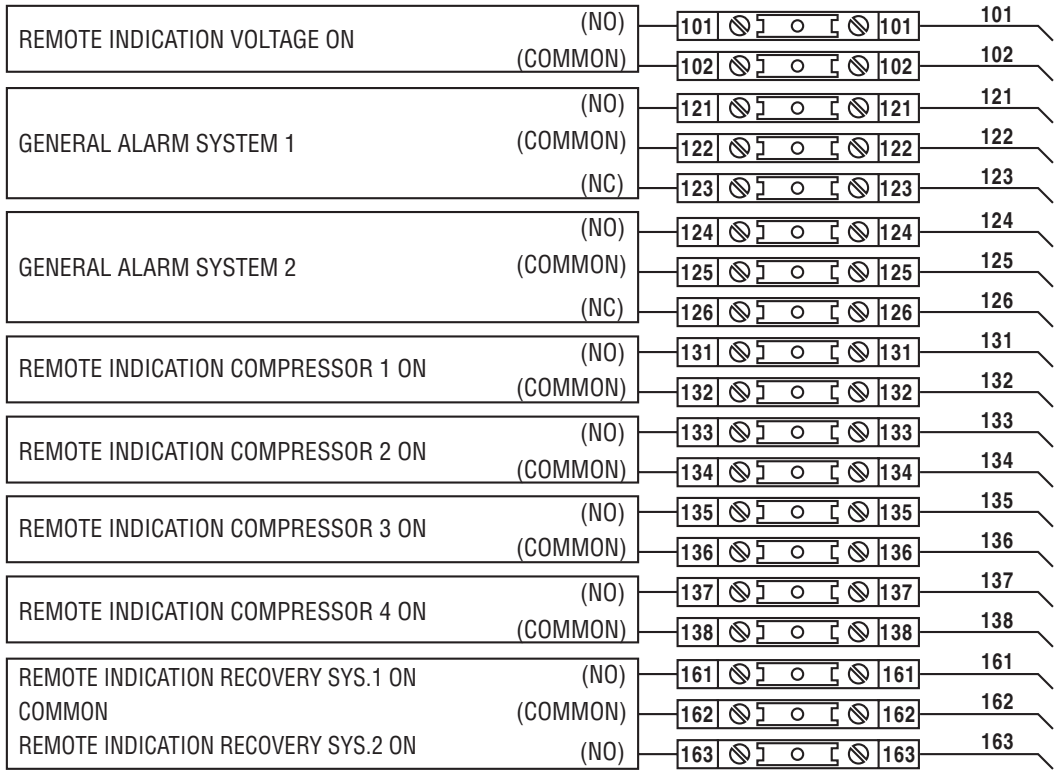


### QG - Y3

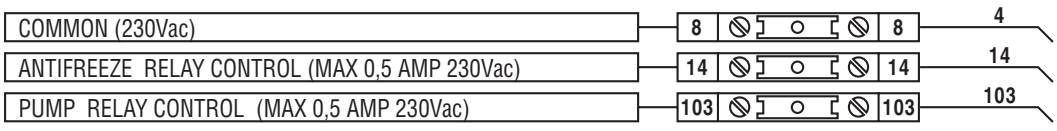

## 4.8 Connecting plate-type evaporator temperature sensors

VLS and VLH units are provided with fittings for hydraulic connections between heat exchangers and plant. Each fittings is complete with sensor well to fasten temperature sensor (BT-IN and BT-OUT). Fittings are supplied separate and must be mounted during the installation of the unit, as explained in the instruction below.

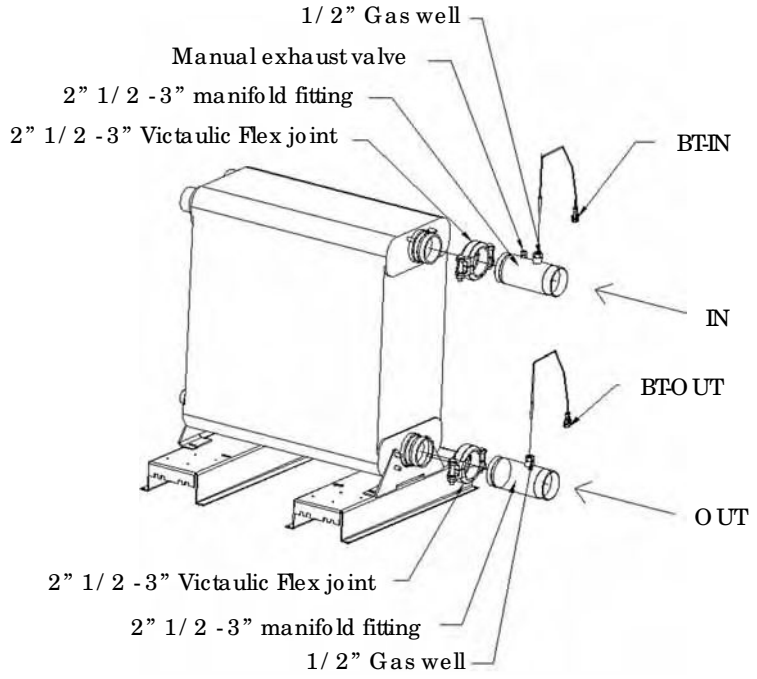


## 4.9 Total heat recovery features

### Temperature sensors

Temperature sensors for recovery system water control, BTRin e BTRout, are supplied by factory with the unit, already wired, and must be fitted on the water connections at the heat reclaim condenser inlet and outlet (see wiring diagram).

### Three-way valve

The three-way valve must be installed on-site. It permits bypassing the heat reclaim condenser for correct operation at low return water temperature. Water and electrical connections, as well as thermal insulation must be made at the time of installation on-site.
The best position is close to heat reclaim condenser (to achieve a small water circuit).

NOTE: The space required by this valve does not permit installation on the factory

### Forced shuttering

When recovery system is on, a commutation from air condensing and water condensing takes place. At the same time compressor-tandem is automatically shuttered to allow the control of condensation in the transient phase. The same process takes place when the system commutates from water condensing to air condensing.

# 5 START-UP




The unit must be started for the first time by personnel suitably trained by one of Itelco-Industry's Authorised Service Centre. Failure to meet this requirement will immediately void the warranty.




The operations carried out by Itelco-Industry personnel are limited to the start-up of the unit, and do not include any other operation on the plant, such as, for example, electrical and hydraulic connections etc. All the other operations before start-up, including oil pre-heating for at least 12 hours, must be performed by the Installer.

## 5.1 Preliminary check

The checks listed below shall be performed before starting the unit and before the arrival of the personnel authorised by Itelco-Industry.

- Check the section of power supply and grounding cables; make sure that terminals are tightened and check the correct operation of contactors, with the master switch open.
- Check that any voltage and phase variation in the power supply does not exceed the prefixed thresholds.
- Connect the contacts of the flow switch and the thermal relay of the pump and of the other devices (if any), to terminals 1-2 and 3-4, respectively.
- Check that the components of the external water circuit (pump, user equipment, filters, power supply tank and reservoir, if any) have been installed properly, and according to the manufacturer's instructions.
- Check the filling of the hydraulic circuits, and make sure that the fluid circulation is correct, without any trace of leaks and air bubbles. If you use ethylene glycol as antifreeze, check that its percentage is correct.
- Check that the direction of rotation of the pumps is correct, and that fluids have been circulating for at least 12 hours for both pumps. Then, clean the filters on the suction side of the pumps.
- Adjust the liquid distribution network in such a way that the flow rate is within the specified range.
- Check that the water quality is up to the specifications.
- Check that oil heaters, if any, have been turned on at least 12 hours before.

## 5.2 Start-up

Start-up sequence:

- Turn on the master switch (at least 12 hours before).
- Check that the oil in the compressor has reached the requested temperature (the minimum temperature outside the pan must be approx. 40°C) and that the auxiliary control circuit is energised.
- Check the operation of all the external equipment, and make sure that the control devices of the plant are properly calibrated.
- Start the pump and check that the water flow is correct.
- Set the desired fluid temperature on the control board.
- Start the appliance (see Chapter 6).
- Check the correct direction of rotation of compressors. Scroll compressors cannot compress the refrigerant when they rotate in the opposite direction. To make sure that they are rotating in the correct direction, simply check that, just after the start-up of the compressor, the pressure drops on the LP side and rises on the HP side. Furthermore, if a scroll compressor rotate in the opposite direction, there is a considerable rise in the sound level of the unit, as well as in a dramatic reduction of current absorption compared to normal values. In case of wrong rotation, the scroll compressor can be definitely damaged.
- After about 15 minutes of operation check that there are no bubbles, through the sight glass on the liquid line.




The presence of bubbles may indicate that a part of the refrigerant charge has been released in one or more points. It is important to remove these leaks before proceeding.

- Repeat the start-up procedure after removing the leaks.
- Check the oil level in the compressor's sight glass.

## 5.3 Checking the operation

Check the following:

- The temperature of the water entering the evaporator.
- The temperature of the water leaving the evaporator.
- The level of the water flow rate in the evaporator, if possible.
- The current absorption upon the start of the compressor and in case of stabilised operation.
- The fan's current absorption.

Check that the condensing and evaporation temperatures, during operation at high and low pressure detected by the pressure gauges of the refrigerant, are within the following range:
(On the units not provided with HP/ LP pressure gauges for the refrigerant, connect a pressure gauge to the Shrader valves on the refrigeration circuit).

| | |
|---|---|
| **HP side** | Approx. 15 to 21°C above the temperature of the air entering the condenser, for R410A units. |
| **LP side** | Approx. 2 to 4°C below the temperature of the leaving chilled water, for R410A units. |

## 5.4 Delivery to the customer

- Train the user according to the instructions provided in Section 6.

# 6 GENERAL INFORMATION

## Introduction

This document contains the information and the operating instructions for VLS-VLH-VLC 4 compressors & electronic control.
This information is for the after-sales service and the production operators, for the end-of-line testing.

## Main Characteristics

– Microprocessor control
– User-friendly keyboard
– Proportional and integral control of the return water temperature (RWT)
– Hysteresis control of the leaving water temperature (LWT)
– Access code to enter the Manufacturer's Level
– Access code to enter the Assistance Level
– Alarm and LED
– Backlighted LCD
– Closed-loop condensing pressure control
– Pump-Down logic (start-stop)
– Rotation of the compressor operation
– Oil return function
– Night mode (or Low Noise) control
– Counting of the pump/ compressors' hours of operation
– Display and control of superheating by EEV
– Display of discharge and suction pressure values
– History of stored alarms (option)
– Programming of different setpoints with 4 ranges of time/ setpoint.

The following accessories can be also connected:

– Real Time Clock Memory Card: alarm history and programming of different setpoints with ranges of time
– Serial Communication RS485 Card; to connect the **Chiller Control** to a BMS network
– Remote Display Terminal
– Wire Remote Control

## 6.1 Control of VLS-VLH-VLC with 4 compressors. The "CHILLER CONTROL" system

The VLS-VLH machines with 4 scroll compressors are provided with a microprocessor card which is fully programmed by default for the control of a chiller of cold only type with 2 circuits, 2 compressors per circuit, a high-pressure transducer per circuit.
The control system consists of:

## Keyboard & Display Terminal

## General information

The figure shows the terminal with the front door open.
It is provided with a LCD 4 lines x 20 columns, keyboard and microprocessor-controlled LED's, so as to allow the programming of the control parameters (setpoint, differential bands, alarm thresholds) and themain operations to be carried out by the user.

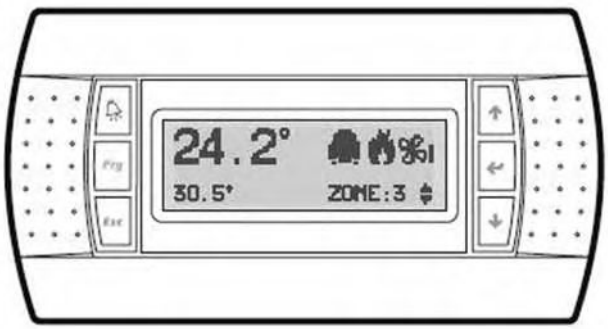


## Terminal & Key Board description

The terminal makes it possible to carry out the following operations:

– the initial configuration of the machine
– the change of all the main operating parameters
– the display of the detected alarms
– the display of all the measured quantities

The terminal and the card are connected by a 6-way phone cable.
The connection of the terminal to the basic card is not essential for the normal operation of the controller.

Prg

Access to the “display mask” of the machine status.

Utente
Costruttore
Manutenzione
In/ Out

Setpoint
Versione
Fasce orarie

Esc

**Esc key**: allows you to move from one mask to another.

**Alarm key**: used to display the alarms, to reset them in manual.
Press it one to display the mask of the activated alarm, press it again to reset the alarm signal.

Prg Esc

**Prg-Esc keys**: Pressing these keys at the
same time,allows you to turn the unit on/ off.

**Up-Down keys**: allows you to set the control parameters' values and to move from one mask to another (not backlighted).

**Enter key**: used to move the cursor inside the masks and to save the values of the set parameters.

**Alarm-Enter keys:**Press these keys at the same time to enter the "storical alarm“after 1’ come back at status machine menu’.

## 6.2 Display

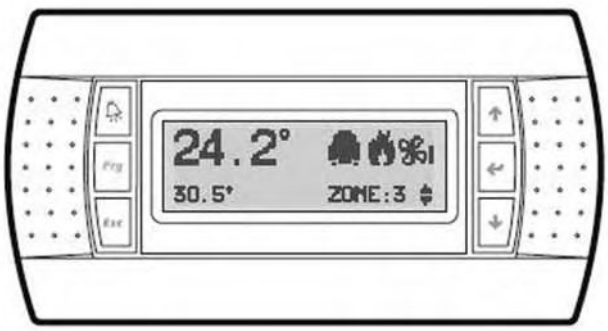


The display is an LCD 4 lines x 20 columns. The quantities and the information about the operation of the unit are alternated in the form of subsequent screens, named.

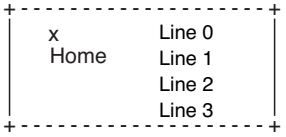


## 6.3 Keyboard

### Arrows key - Up/ Down/ Enter

If the cursor is in the top left-hand corner (Home), press the UP/ DOWN keys to access the subsequent masks associated to the selected branch. If a mask includes some value setting fields and you press the ENTER key, the cursor will reach these fields.
Once you have reached the quantity setting field, you can modify any value (within the expected limits) by pressing the UP/ DOWN keys.
After you have selected the desired value, press the ENTER key again to store it.

## ■ Alarms 

| Code | Alarm unit description | Comp Status | Fan Status | Pump Status | Aut/Man Reset | Delay | Notes |
|---|---|---|---|---|---|---|---|
| AI00 | Automatic alarm | on | on | on | Aut | 0 | |
| AI01 | Efficiency alarm CPS | Off | Off | Off | Man | 30 sec | |
| AI02 | Flow meter alarm | Off | Off | Off | Man | Parameter | |
| AI03 | Sys 1 High pressure "manual reset" | Off Sys 1 | Run | Run | Man | No | |
| AI04 | Sys 2 High pressure "manual reset" | Off Sys 2 | Run | Run | Man | No | |
| AI07 | Failure of sensor B3 Sys 1 DP1 | Run | Max | Run | Auto | 10 sec | |
| AI08 | Failure of sensor B4 Sys 2 DP2 | Run | Max | Run | Auto | 10 sec | |
| AI09 | Failure of sensor B5 Tair | Run | Max | Run | Auto | 10 sec | |
| AI10 | Failure of sensor B6 TIAN | Off | Off | Run | Auto | 10 sec | |
| AI11 | Failure of sensor B7 Tin | Off | Off | Run | Auto | 10 sec | |
| AI12 | Failure of sensor B8 Tout | Off | Off | Run | Auto | 10 sec | |
| AI13 | Failure of sensor B1 Tcoil 1 | Run | Run | Run | Auto | 10 sec | Defrost every 40' |
| AI14 | Failure of sensor B2 Tcoil 2 | Run | Run | Run | Auto | 10 sec | Defrost every 40' |
| AI15 | Failure of sensor B3 TANDEM 1 | Run | Max | Run | Auto | 10 sec | |
| AI16 | Failure of sensor B4 TANDEM 2 | Run | Max | Run | Auto | 10 sec | |
| AI17 | Maintenance of compressor 1 | Run | Run | Run | Man | No | |
| AI18 | Maintenance of compressor 2 | Run | Run | Run | Man | No | |
| AI19 | Maintenance of compressor 3 | Run | Run | Run | Man | No | |
| AI20 | Maintenance of compressor 4 | Run | Run | Run | Man | No | |
| AI21 | Pump maintenance alarm | Off | Off | Off | Man | No | |
| AI22 | Failure of clock card | Run | Run | Run | Man | No | |
| AI23 | Thermal switch, compressor 1 | Off Comp. 1 | Run | Run | Man | No | |
| AI23A | Thermal switch, compressor 1 | Off Comp. 1 | Run | Run | Auto | 1 time auto VLS<br>3 time auto VIH | |
| AI24 | Thermal switch, compressor 2 | Off Comp. 2 | Run | Run | Man | No | |
| AI24A | Thermal switch, compressor 2 | Off Comp. 2 | Run | Run | Auto | 1 time auto VLS<br>3 time auto VIH | |
| AI25 | Thermal switch, compressor 3 | Off Comp. 3 | Run | Run | Man | No | |
| AI24A | Thermal switch, compressor 3 | Off Comp. 3 | Run | Run | Auto | 1 time auto VLS<br>3 time auto VIH | |
| AI26 | Thermal switch, compressor 4 | Off Comp. 4 | Run | Run | Man | No | |
| AI26A | Thermal switch, compressor 4 | Off Comp. 4 | Run | Run | Auto | 1 time auto VLS<br>3 time auto VIH | |
| AI27 | Sys 1 Low pressure | Off Sys 1 | Run | Run | Man | Parameter | |
| AI27A | Sys 1 Low pressure | Off Sys 1 | Run | Run | Man | 3 time auto | |
| AI28 | Sys 2 Low pressure | Off Sys 2 | Run | Run | Man | Parameter | |
| AI28A | Sys 2 Low pressure | Off Sys 2 | Run | Run | Man | 3 time auto | |
| AI29 | Thermal switch, fans | Off | Off | Run | Man | No | |
| AI29A | Thermal switch, fans A | Off | Off | Run | Auto | 1 time auto | |
| AI30 | Sys Antifreeze alarm | Off Sys 1 | Off | Run | Man | No | |
| AI30A | Sys Antifreeze alarm | Off Sys 1 | Off | Run | Auto | 1 time auto | |
| AI32 | Espansion off line | Run | Run | Run | Auto | No | |
| AI33 | Eprom failure | Off | Off | Off | Man | No | |

| Code | Alarm driver description | CIRC 1-EEV 1 Status | CIRC 2-EEV 2 Status | Notes |
|---|---|---|---|---|
| AI34 | Epron failure driver 1 | Off | Run | Man |
| AI35 | Epron failure driver 2 | Run | Off | Man |
| AI36 | Cable motor EVV driver 1 | Off | On | Man |
| AI37 | Cable motor EVV driver 2 | On | Off | Man |
| AI38 | Timeout MOP driver 1 | 0% | - | Auto |
| AI39 | Timeout MOP driver 2 | - | 0% | Auto |
| AI40 | Timeout LOP driver 1 | 100% | - | Auto |
| AI41 | Timeout LOP driver 2 | - | 100% | Auto |
| AI42 | Low SH driver 1 | Run | Run | Auto |
| AI43 | Low SH driver 2 | Run | Run | Auto |
| AI44 | Valve open driver 1 | Off | Run | Auto |
| AI45 | Valve open driver 2 | Run | Off | Auto |
| AI46 | High SH driver 1 | Run | Run | Auto |
| AI47 | High SH driver 2 | Run | Run | Auto |
| AI48 | Sensor 1 driver 1 | Off | Run | Auto |
| AI49 | Sensor 1 driver 2 | Run | Off | Auto |
| AI50 | Sensor 2 driver 1 | Off | Run | Auto |
| AI51 | Sensor 2 driver 2 | Run | Off | Auto |
| AI52 | Sensor 3 driver 1 | Off | Run | Auto |
| AI53 | Sensor 3 driver 2 | Run | Off | Auto |
| AI54 | GoAhead driver 1 | Run | Run | Auto |
| AI55 | GoAhead driver 2 | Run | Off | Auto |
| AI56 | Lon driver 1 disconnected | Off | Run | Auto |
| AI57 | Lon driver 2 disconnected | Run | Off | Auto |
| AI59 | Auto set up driver 1 | Off | Run | Auto |
| AI59 | Auto set up driver 2 | Run | Off | Auto |
| AI60 | High limit discharge temp Sys 1 | Off | On | Auto |
| AI61 | High limit discharge temp Sys 2 | On | Off | Auto |
| AI62 | High limit discharge temp Sys 1 | Off | On | Man |
| AI63 | High limit discharge temp Sys 2 | On | Off | Man |
| AI64 | Alarm antifreeze recovery | Off recovery | | Man |

## ■ Setpoint

Pressing the Set key allows you to enter the Set point level accessible to the user. The parameters that can be set are listed below, along with the limit values and the default values (standard shop settings):

| User parameters | Control mode | Min value | Max value | Default |
|---|---|---|---|---|
| Cooling Setpoint | RWT Return Control<br>LWT Leaving Control | 8<br>6 | 20<br>20 | 10<br>8 |
| Cooling Setpoint - glycol water | RWT Return Control<br>LWT Leaving Control | -15<br>-15 | 20<br>20 | 10<br>8 |
| Proportional band<br>Neutral band | RWT Return Control<br>LWT Leaving Control | 1<br>1 | 10<br>6 | 5<br>2 |
| Heating Setpoint | RWT Return Control<br>LWT Leaving Control | 20<br>20 | 45<br>50 | 40<br>40 |
| languages | —— | ITA ENG FRE GER SPA | | ITA |
| **System On/Off** | | | | |
| System 1 # | —— | OFF | ON | OFF |
| System 2 # | —— | OFF | ON | OFF |
| Unit Management | | Cooling | Heating | |

## 6.4 Protection and Safety Equipment

### Defrosting System (only for VLH models)

The VLH units are provided with an automatic defrosting system, which prevents the formation of excessive ice banks on coolant/ air exchangers during heat pump operation.

This system, which is part of the electronic control system, is of the time/ suction pressure type, and when the suction pressure detected by a sensor drops below a fixed limit, once the preset time is over, switches from heating to cooling the operation of the unit, with the fans stopped.

During the defrosting cycle the compressor works normally, but the coil's fans remain off. The defrosting cycle stops after the coil has been defrosted, and at this point the unit can work in heating mode again.




Both circuits are defrosted at the same time. For safety purposes, fans are started also during defrosting, if the discharge pressure reaches considerable values.

### Frost Protection for the Chilled Fluid

These units are provided with frost protection for the chilled fluid. This protection consists of an electrical resistor positioned in contact with the coolant/ circulating fluid exchanger, which is activated (although the unit is off) when the temperature of the fluid drops below 5 °C - the standard value for a non-glycol unit.

If the leaving water temperature drops below 4 °C (standard value for a non-glycol unit) the machine's antifreeze alarm is activated. If the circulating fluid is water, before the beginning of the cold season it is advisable to drain the circuit to prevent water frosting.

If the circuit cannot be drained, it is essential to avoid de-energizing the unit, so as to permit the activation, when necessary, of the frost protection.

### Compressor protection

Compressors are equipped with a heating element to prevent oil dilution, which may result in remarkable risks of failure of compressors.

The windings of the compressors' motors are provided with a thermal protection.

For VLS/ VLH/ VLC/ VLR models an accessory kit for thermal protection is available, for any overcurrent of scroll compressors, which shall be shop-mounted.

### Electrical flow switch

To ensure the correct operation of the unit, a electrical flow switch must be installed, to prevent the unit working in case of insufficient circulation of the chilled fluid.




The electrical flow switch must be carefully installed, according to the instructions given by the Manufacturer.

The electrical flow switch must be installed on the pressing side of the circulation pump for the fluid, just upstream of the heat exchanger's inlet. The electrical flow switch must be installed in a horizontal straight length of piping, in a position reasonably far (both upstream and downstream) from localized pressure drops (curves, valves etc.).

### Continuous Regulation of the Fan Speed

The fans' speed regulator, if installed, allows the unit to work at an ambient temperature down to -18°C.

### Differential pressure switch

This pressure switch halts the operation of the unit in the event that it does not detect a sufficient pressure drop through the exchanger.

## 6.5 SIF version configuration

Units equipped with special inverter fans (SIF) can be set-up on the field to give the unit a specific static pressure.
By entering parameter in service level - Max Speed (Vdc) - it is possible to modify high static pressure.

The table below shows the correspondance between chiller model, fan RPM, high static pressure.

| Size | High Static Pressure Fan (Pa) | Fan RPM | Parameter in Service Level: Max Speed (Vdc) |
|---|---|---|---|
| VLS 524 | 45 | 900 | 6,8 |
| | 70 | 950 | 7,3 |
| | **100*** | **1000** | **7,8** |
| | 130 | 1050 | 8,3 |
| | 160 | 1100 | 8,9 |
| VLS 604 | 50 | 900 | 6,8 |
| | 80 | 950 | 7,3 |
| | **105*** | **1000** | **7,8** |
| | 130 | 1050 | 8,3 |
| | 160 | 1100 | 8,9 |
| VLS 704 | 45 | 900 | 6,8 |
| | 75 | 950 | 7,3 |
| | **100*** | **1000** | **7,8** |
| | 130 | 1050 | 8,3 |
| | 160 | 1100 | 8,9 |
| VLS 804 | 45 | 900 | 6,8 |
| | 75 | 950 | 7,3 |
| | **100*** | **1000** | **7,8** |
| | 130 | 1050 | 8,3 |
| | 160 | 1100 | 8,9 |
| VLS 904 | 50 | 900 | 6,8 |
| | 80 | 950 | 7,3 |
| | **105*** | **1000** | **7,8** |
| | 130 | 1050 | 8,3 |
| | 160 | 1100 | 8,9 |
| VLS 1004 | 55 | 900 | 6,8 |
| | 80 | 950 | 7,3 |
| | **105*** | **1000** | **7,8** |
| | 130 | 1050 | 8,3 |
| | 160 | 1100 | 8,9 |
| VLS 1104 | 60 | 900 | 6,8 |
| | 85 | 950 | 7,3 |
| | **105*** | **1000** | **7,8** |
| | 130 | 1050 | 8,3 |
| | 160 | 1100 | 8,9 |
| VLS 1204 | 60 | 900 | 6,8 |
| | 85 | 950 | 7,3 |
| | **105*** | **1000** | **7,8** |
| | 130 | 1050 | 8,3 |
| | 160 | 1100 | 8,9 |

* Factory configuration

# 7 GENERAL DESCRIPTION

## 7.1 Introduction

The VLS/ VLH units are water chillers / air-water heat pumps provided with hermetic scroll compressors with two refrigeration circuits.
These units are fit for cooling and heating intermediate fluids (glycoled water), for air-conditioning applications in industrial processes.
These units can be installed outdoor on the roof of a building or at ground level.
This series includes the following versions:

| Version (STD/ HSE[1]) | Description |
|---|---|
| VLS/ VLH Base Low Noise version (BIN[2])<br>VLS/ VLH Low Noise version (IN)<br>VLS/ VLH Extra Low Noise version (EIN)<br>VLS/ VLH High Temperature version (HET) | Air condensing chillers/ heat pumps, using R410A refrigerant. |

[1] High efficiency Units (HSE) with inverter fans [2] A High Pressure Fan (SIF) version is available

For each VLS version, the corresponding condensing unit version (VLC) is available

Available options:

| Options | Description |
|---|---|
| VLS/ D<br>VLH/ D | The heat recovery is carried out by a desuperheater mounted on the compressor's discharge line. |
| VLR | Total heat recovery is carried out by a heat exchanger mounted on the compressor's discharge line in parallel with the condensing circuit.<br>Heat recovery function is activated by mean of a 4-ways valve. |

## 7.2 General specifications

The VLS/ VLH units are supplied complete and provided with all connecting pipes for the refrigerant and internal wiring.
The refrigeration circuit of each unit undergoes a pressure test, is drained, vacuumised, dehydrated and filled with refrigerant, and includes the necessary oil. Once assembled, each unit is subjected to a complete final testing and the correct operation of all refrigeration circuits is checked.
The base and the frame of each unit are made of very thick galvanised sheet, and are secured by screw and stainless bolts. All panels are secured by screw and tropicalised steel bolts, they can be disassembled for easy access to internal components.
All galvanised steel parts are painted with white polyester resin (RAL9001), to ensure the resistance of the unit to corrosion and weather agents over time.

## 7.3 Compressors

These units are provided with hermetic scroll compressors, with built-in motor protection.
Compressors are mounted on shock absorbers to reduce vibrations. Motors are of direct start-up type, cooled by the sucked refrigerant gas.
Thermistors protect the windings from any overtemperatures and the electronic control checks that the delivery temperature is within the permissible range.
The capacity control, as well as the control of the delivered cooling capacity, are always ensured by the electronic control.

## 7.4 Refrigeration circuits

Each unit has two complete refrigeration circuits, including: a service valve to fill the unit with refrigerant, shut-off valves, thermostatic expansion valve, dehydrating filter, sight glass with humidity indicator, a differential pressure switch for the water.
The outdoor VLC units, deriving from the VLS versions, are marked by the absence of the evaporator, and are equipped with shutoff cocks on the suction line and on the liquid line, so as to allow the connection of remote evaporators.
Furthermore, each circuit is equipped with safety devices in accordance with PED 97/ 23/ EC: HP and LP pressure switches, safety valves providing protection in case of fire or malfunction of compressors.

## 7.5 Water heat exchanger

The evaporators are of stainless steel plate type.
Their thermal insulation is ensured by a thick flexible closed-cell heat-insulating jacket. Furthermore, the frost protection is ensured by electric heaters.
These exchangers can work at pressures up to 10 bar on the hydraulic side and 30 bar on the refrigerant side.

The hydraulic connections to the evaporator are of 2" 1/2 Victaulic type on 504 – 804 units and 3" Victaulic type on 904 – 1204 units.

## 7.6 Air heat exchanger

Coils are made of copper pipes in staggered rows, mechanically expanded inside an aluminium finned pack.

## 7.7 Fans

Fans are of directly coupling propeller type, provided with aluminium blade with wing profile.
Each fan is provided with galvanised steel accident-prevention guard.
Finally, motors are completely closed, protection class IP54, protection thermostat immersed in windings.

### VLS refrigeration diagram

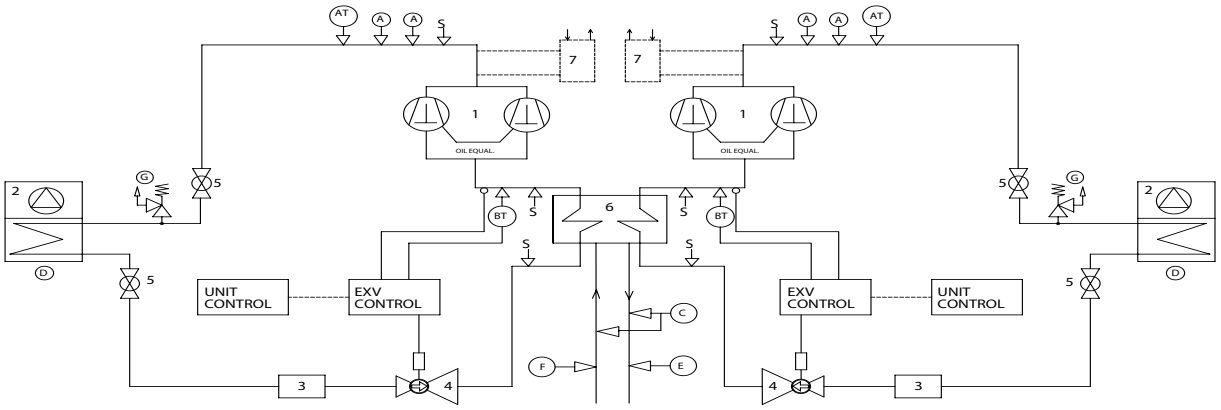


**Components:**
1) Compressor Tandem Scroll Type
2) Air cooled condenser
3) Filter Drier
4) Electronic expansion valve
5) Globe valve
6) Heat exchanger (dual type)
7) Desuperheathers (optional)

**Safety / control devices:**
A - High Pressure switch (42 bar)
AT - High Pressure transducer
BT - Low Pressure transducer
C - Water differential pressure switch (105 bar)
D - Air temperature sensor
E - Outlet water temperature sensor
F - Inlet water temperature sensor

G - Ped pressure relief valve (46 bar)
S - 5/16" Shrader connenction (service only)

▽ Pipe connection with Shrader Valve

### VLH refrigeration diagram

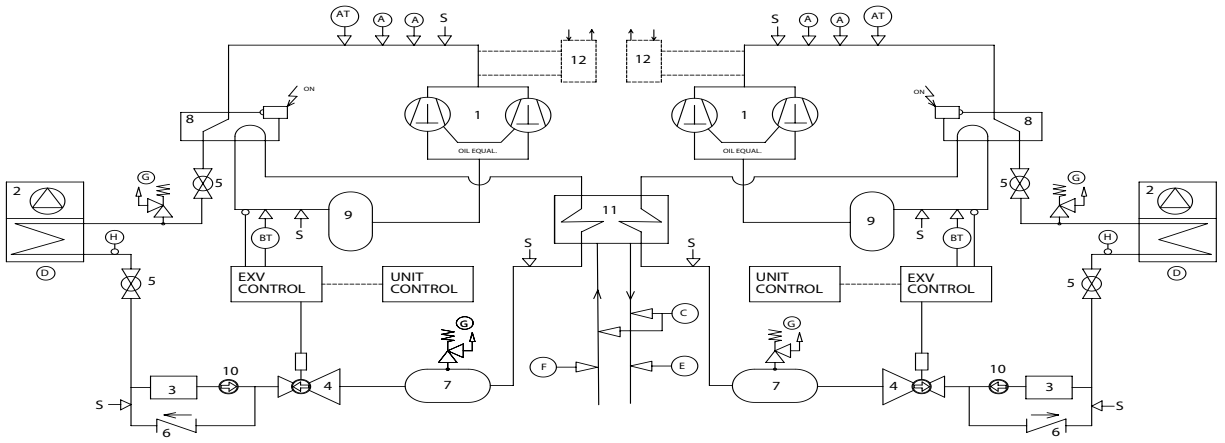


**Components:**
1) Compressor Tandem Scroll Type
2) Air cooled condenser
3) Filter Drier
4) Electronic expansion valve
5) Globe valve
6) Check valve
7) Liquid receiver
8) Four-way valve
9) Suction accumulator
10) Sight glass
11) Heat exchanger (dual type)
12) Desuperheathers (optional)

**Safety / control devices:**
A - High Pressure switch (42 bar)
AT - High Pressure transducer
BT - Low Pressure transducer
C - Water differential pressure switch (105 bar)
D - Air temperature sensor
E - Outlet water temperature sensor
F - Inlet water temperature sensor
G - Ped pressure relief valve (46 bar)
H - Defrost temperature sensor
S - 5/16" Shrader connenction (service only)

▽ Pipe connection with Shrader Valve

## VLC refrigeration diagram

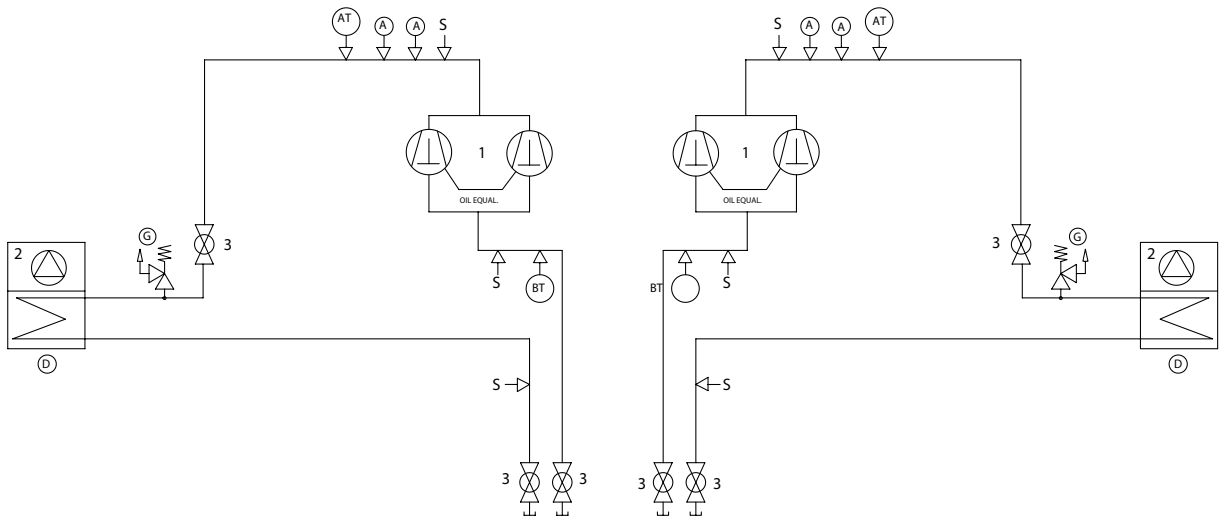


**Components:**
1) Compressor Tandem Scroll Type
2) Air cooled condenser
3) Globe valve

**Safety / control devices:**
A - High Pressure switch (42 bar)
AT - High Pressure transducer
BT - Low Pressure transducer
D - Air temperature sensor
G - Ped pressure relief valve (46 bar)
S - 5/16" Shrader connenction (service only)

Pipe connection with Shrader Valve

## VLR refrigeration diagram

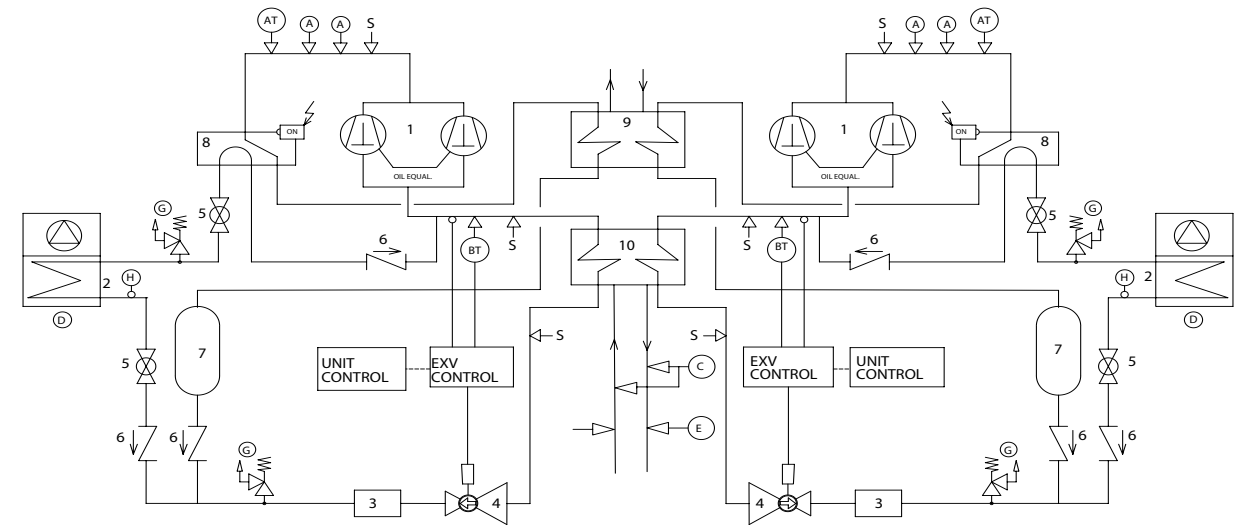


**Components:**
1) Compressor Tandem Scroll Type
2) Air cooled condenser
3) Filter Drier
4) Electronic expansion valve
5) Globe valve
6) Check valve
7) Liquid receiver
8) Four-way valve
9) Recovery condenser
10) Heat exchanger (dual type)

**Safety / control devices:**
A - High Pressure switch (42 bar)
AT - High Pressure transducer
BT - Low Pressure transducer
C - Water differential pressure switch (105 bar)
D - Air temperature sensor
E - Outlet water temperature sensor
F - Inlet water temperature sensor
G - Ped pressure relief valve (46 bar)
H - Defrost temperature sensor
S - 5/16" Shrader connenction (service only)

Pipe connection with Shrader Valve

## 7.8 Electric power supply and control system

The control compartment contains and electronic card with keyboard and a display for working parameters, alarms, if any, and operating blocks.
It is complete with remote control switches and protection fuses for the motors of compressors, fans and pumps.

## 7.9 Accessories

List of available accessories, provided separately, to be mounted on site by the installer:

### Water flow switch

Prevents the operation of the unit when the chilled fluid is insufficient. It is advisable to install a flow switch, to ensure the correct operation of the unit.

### Water filter

Filter to be mounted on the suction side of the water heat exchanger.

### Antivibrating supports (AVM)

Isolating spring supports, equipped with bolts for fastening to the base. They are supplied separated from the unit and must be mounted on site by the customer, at his own expense.

### Fan speed regulator

The speed regulator of the fans is mounted as a standard accessory for the Extra Low Noise units, and is an optional accessory for the Standard and Low Noise units. The fan speed is controlled in order to work at a low room temperature, and allows the unit to work down to a room temperature of –18°C.
The control can be of the pressostatic step type, with temperature correction, or of continuous type (under pressure), with electronic regulator. The regulator is of electronic type only for the Extra Low Noise versions.

### Wire-type remote control kit

The kit includes a remote control for wall mounting, complete with 3m-long connecting cable, and installation manual and a transformer.
For longer distances (i.e. up to 50m) you can use a multipolar cable of minimum section (0.25mm). Conductors should be connected directly and according to the diagram with accompanies the installation instructions.

### Remote wall terminal

Makes it possible to check the unit through a remote terminal, up to a maximum distance of 200 meters.

### RS-485 serial card (for MODBUS or LONWORK or BACNET)

A communication interface makes it possible to control and manage the unit from a local station, with RS485 connection, up to a distance of 1,000m.
It is possible to obtain the remote control and the management, by inserting the control into the management plant of the building.

### Hydronic module

The Hydronic Module, to be installed on site at the Customer's expense, is a hydraulic package which includes all the components required for the fluid distribution system. It has been designed for outdoor installation, on the roofing of the building, rather than directly at the ground level.

The Hydronic Module is enclosed in its own case and includes:

- an inertial tank
- a single or double pump for standard head or high head
- the expansion tank
- a water filter installed near the suction of the pump
- a pressure gauge
- shutoff valves for filter maintenance purposes
- a safety valve, calibrated at 3 bar
- an automatic air relief valve
- fill and drain valves
- thermal insulation for piping and hydronic components
- a switchboard (protection class IP54) provided with main disconnecting switch, contactors and fuses for the pump and the electric heaters, if any
- antifreeze electric heater (optional)
- kit of antivibrating devices (optional) to be used if the appliance is to be installed on the refrigerator
- cascade start-up sequencer (up to 4 parallel units).

# 8 TECHNICAL DATA

## 8.1 Pressure drops

| PRESSURE DROP IN THE EVAPORATOR | | | | | | | | | |
|---|---|---|---|---|---|---|---|---|---|
| | | VLS 524 | VLS 604 | VLS 704 | VLS 804 | VLS 904 | VLS 1004 | VLS 1104 | VLS 1204 |
| K | kPa/ (l/ s)^2 | 0,66 | 0,66 | 0,66 | 0,54 | 0,19 | 0,19 | 0,19 | 0,19 |
| Min. water flow rate | l/ s | 4,1 | 4,6 | 5,3 | 5,9 | 6,8 | 7,5 | 8,3 | 9,2 |
| Nominal flow rate | l/ s | 6,5 | 7,4 | 8,5 | 9,5 | 10,9 | 12,0 | 13,4 | 14,7 |
| Max. water flow rate | l/ s | 10,9 | 12,3 | 14,1 | 15,8 | 18,2 | 20,0 | 22,3 | 24,5 |
| Min. pressure drops | kPa | 11,1 | 14,1 | 18,5 | 19,2 | 9,0 | 10,8 | 13,4 | 16,3 |
| Nominal pressure drops | kPa | 28,3 | 36,1 | 47,5 | 49,1 | 23,1 | 27,7 | 34,4 | 41,7 |
| Max. pressure drops | kPa | 78,6 | 100,3 | 131,8 | 136,4 | 64,0 | 76,9 | 95,5 | 115,7 |

$\Delta P = K \cdot Q^2$

| PRESSURE DROP IN THE DESUPERHEATER* | | | | | | | | | |
|---|---|---|---|---|---|---|---|---|---|
| | | VLS 524 | VLS 604 | VLS 704 | VLS 804 | VLS 904 | VLS 1004 | VLS 1104 | VLS 1204 |
| K | kPa/ (l/ s)^2 | 31,75 | 20,61 | 20,61 | 14,26 | 14,26 | 14,26 | 9,33 | 9,33 |
| Min. water flow rate | l/ s | 0,5 | 0,6 | 0,7 | 0,8 | 0,9 | 1,0 | 1,1 | 1,2 |
| Nominal flow rate | l/ s | 0,9 | 1,0 | 1,1 | 1,3 | 1,4 | 1,6 | 1,8 | 2,0 |
| Max. water flow rate | l/ s | 1,4 | 1,6 | 1,9 | 2,2 | 2,4 | 2,6 | 2,9 | 3,3 |
| Min. pressure drops | kPa | 9,2 | 7,3 | 10,6 | 9,3 | 11,4 | 13,8 | 11,4 | 14,0 |
| Nominal pressure drops | kPa | 23,5 | 18,8 | 27,1 | 23,7 | 29,3 | 35,4 | 29,4 | 35,8 |
| Max. pressure drops | kPa | 65,2 | 52,3 | 75,3 | 65,9 | 81,4 | 98,4 | 81,0 | 99,5 |

$\Delta P = K \cdot Q^2$

| PRESSURE DROP IN THE RECOVERY CONDENSER* | | | | | | | | | |
|---|---|---|---|---|---|---|---|---|---|
| | | VLS 524 | VLS 604 | VLS 704 | VLS 804 | VLS 904 | VLS 1004 | VLS 1104 | VLS 1204 |
| K | kPa/ (l/ s)^2 | 0,66 | 0,66 | 0,66 | 0,54 | 0,19 | 0,19 | 0,19 | 0,19 |
| Min. water flow rate | l/ s | 5,1 | 5,7 | 6,7 | 7,5 | 8,6 | 9,3 | 10,4 | 11,6 |
| Nominal flow rate | l/ s | 8,2 | 9,1 | 10,6 | 12,0 | 13,8 | 14,8 | 16,7 | 18,6 |
| Max. water flow rate | l/ s | 13,7 | 15,2 | 17,7 | 20,0 | 23,0 | 24,7 | 27,8 | 30,9 |
| Min. pressure drops | kPa | 17,4 | 21,6 | 29,4 | 30,7 | 14,3 | 16,6 | 20,9 | 26,0 |
| Nominal pressure drops | kPa | 44,6 | 55,3 | 75,3 | 78,5 | 36,6 | 42,5 | 53,5 | 66,4 |
| Max. pressure drops | kPa | 123,9 | 153,7 | 209,1 | 218,0 | 101,6 | 118,0 | 148,6 | 184,6 |

$\Delta P = K \cdot Q^2$

* data refer to BIN version

## 8.2 Technical data

| VLS BLN | | 524 | 604 | 704 | 804 |
|---|---|---|---|---|---|
| Power supply | V/ ph/ Hz | 400 (±10%) / 3 / 50 | | | |
| Number of circuits | | 2 | 2 | 2 | 2 |
| Capacity steps | % | 25-50-75-100 | 28-50-78-100 | 20-50-70-100 | 25-50-75-100 |
| **Refrigerant** | | | | | |
| Type | | R410A | | | |
| Charge (1) | kg | 26,6 | 30,0 | 34,4 | 39,4 |
| **Compressor** | | | | | |
| Type | | Scroll | | | |
| Number | | 4 | 4 | 4 | 4 |
| Start-up type | | Direct | | | |
| N° of loading stages | | 0/ 100 | 0/ 100 | 0/ 100 | 0/ 100 |
| **Evaporator** | | | | | |
| Type | | Plate | | | |
| Number | | 1 | 1 | 1 | 1 |
| Water flow rate | l/ s | 6,5 | 7,4 | 8,5 | 9,5 |
| Pressure drop | kPa | 28,3 | 36,1 | 47,5 | 49,1 |
| Water volume | l | 11,5 | 11,5 | 11,5 | 13,3 |
| **Condenser** | | | | | |
| Type | | Coil | | | |
| **Hydraulic connections** | | | | | |
| Type | | Threaded gas male | | | |
| Inlet diameter | inch | 2"1/ 2 | 2"1/ 2 | 2"1/ 2 | 2"1/ 2 |
| Outlet diameter | inch | 2"1/ 2 | 2"1/ 2 | 2"1/ 2 | 2"1/ 2 |
| **Weights** | | | | | |
| Shipping weight | kg | 1188 | 1413 | 1603 | 1746 |
| Operating weight | kg | 1200 | 1425 | 1615 | 1760 |
| **Additional Weights** | | | | | |
| HSE*/ SIF** versions | kg | 30 | 30 | 30 | 30 |
| Desuperheater versions | kg | 20 | 20 | 20 | 30 |
| With one pump | kg | 50 | 50 | 85 | 85 |
| With two pumps | kg | 140 | 140 | 200 | 200 |
| Copper Fins | kg | 380 | 380 | 520 | 520 |
| **Dimensions** | | | | | |
| Length | mm | 3300 | 3300 | 4300 | 4300 |
| Width | mm | 1100 | 1100 | 1100 | 1100 |
| Height | mm | 2300 | 2300 | 2300 | 2300 |

(1) Indicative value, always refer to the value specified on the unit's label
(*) High Efficiency Units (HSE) with inverter fans (**) SIF Units with high static pressure fans

| VLS BLN | | 904 | 1004 | 1104 | 1204 |
|---|---|---|---|---|---|
| Power supply | V/ ph/ Hz | 400 (±10%) / 3 / 50 | | | |
| Number of circuits | | 2 | 2 | 2 | 2 |
| Capacity steps | % | 28-50-78-100 | 25-50-75-100 | 23-50-73-100 | 25-50-75-100 |
| **Refrigerant** | | | | | |
| Type | | R410A | | | |
| Charge (1) | kg | 47,3 | 49,2 | 55,1 | 60,4 |
| **Compressor** | | | | | |
| Type | | Scroll | | | |
| Number | | 4 | 4 | 4 | 4 |
| Start-up type | | Direct | | | |
| N° of loading stages | | 0/ 100 | 0/ 100 | 0/ 100 | 0/ 100 |
| **Evaporator** | | | | | |
| Type | | Plate | | | |
| Number | | 1 | 1 | 1 | 1 |
| Water flow rate | l/ s | 10,9 | 12,0 | 13,4 | 14,7 |
| Pressure drop | kPa | 23,1 | 27,7 | 34,4 | 41,7 |
| Water volume | l | 25,2 | 25,2 | 25,2 | 25,2 |
| **Condenser** | | | | | |
| Type | | Coil | | | |
| **Hydraulic connections** | | | | | |
| Type | | Threaded gas male | | | |
| Inlet diameter | inch | 3” | 3” | 3” | 3” |
| Outlet diameter | inch | 3” | 3” | 3” | 3” |
| **Weights** | | | | | |
| Shipping weight | kg | 1880 | 2010 | 2100 | 2110 |
| Operating weight | kg | 1905 | 2035 | 2125 | 2135 |
| **Additional Weights** | | | | | |
| HSE* / SIF** versions | kg | 40 | 40 | 40 | 40 |
| Desuperheater versions | kg | 30 | 30 | 30 | 30 |
| With one pump | kg | 90 | 90 | 95 | 95 |
| With two pumps | kg | 205 | 205 | 215 | 215 |
| Copper Fins | kg | 520 | 700 | 880 | 880 |
| **Dimensions** | | | | | |
| Length | mm | 4300 | 4300 | 4300 | 4300 |
| Width | mm | 1100 | 1100 | 1100 | 1100 |
| Height | mm | 2300 | 2300 | 2300 | 2300 |

(1) Indicative value, always refer to the value specified on the unit's label
(*) High Efficiency Units (HSE) with inverter fans (**) SIF Units with high static pressure fans

| VLS LN | | 524 | 604 | 704 | 804 |
|---|---|---|---|---|---|
| Power supply | V/ ph/ Hz | 400 (±10%) / 3 / 50 | | | |
| Number of circuits | | 2 | 2 | 2 | 2 |
| Capacity steps | % | 25-50-75-100 | 28-57-78-100 | 20-50-70-100 | 25-50-75-100 |
| **Refrigerant** | | | | | |
| Type | | R410A | | | |
| Charge (1) | kg | 26,6 | 30,0 | 34,4 | 39,4 |
| **Compressor** | | | | | |
| Type | | Scroll | | | |
| Number | | 4 | 4 | 4 | 4 |
| Start-up type | | Direct | | | |
| N° of loading stages | | | | | |
| **Evaporator** | | 0/ 100 | 0/ 100 | 0/ 100 | 0/ 100 |
| Type | | Plate | | | |
| Number | | 1 | 1 | 1 | 1 |
| Water flow rate | l/ s | 6,3 | 7,2 | 8,2 | 9,2 |
| Pressure drop | kPa | 26,5 | 34,0 | 45,0 | 46,3 |
| Water volume | l | 11,5 | 11,5 | 11,5 | 13,3 |
| **Condenser** | | | | | |
| Type | | Coil | | | |
| **Hydraulic connections** | | | | | |
| Type | | Threaded gas male | | | |
| Inlet diameter | inch | 2"1/ 2 | 2"1/ 2 | 2"1/ 2 | 2"1/ 2 |
| Outlet diameter | inch | 2"1/ 2 | 2"1/ 2 | 2"1/ 2 | 2"1/ 2 |
| **Weights** | | | | | |
| Shipping weight | kg | 1188 | 1413 | 1603 | 1746 |
| Operating weight | kg | 1200 | 1425 | 1615 | 1760 |
| **Additional Weights** | | | | | |
| HSE* versions | kg | 30 | 30 | 30 | 30 |
| Desuperheater versions | kg | 20 | 20 | 20 | 30 |
| With one pump | kg | 50 | 50 | 85 | 85 |
| With two pumps | kg | 140 | 140 | 200 | 200 |
| Copper Fins | kg | 380 | 380 | 520 | 520 |
| **Dimensions** | | | | | |
| Length | mm | 3300 | 3300 | 4300 | 4300 |
| Width | mm | 1100 | 1100 | 1100 | 1100 |
| Height | mm | 2300 | 2300 | 2300 | 2300 |

(1) Indicative value, always refer to the value specified on the unit's label
(*) High Efficiency Units (HSE) with inverter fans

| VLS LN | | 904 | 1004 | 1104 | 1204 |
|---|---|---|---|---|---|
| Power supply | V/ ph/ Hz | 400 (±10%) / 3 / 50 | | | |
| Number of circuits | | 2 | 2 | 2 | 2 |
| Capacity steps | % | 28-50-78-100 | 25-50-75-100 | 23-50-73-100 | 25-50-75-100 |
| **Refrigerant** | | | | | |
| Type | | R410A | | | |
| Charge (1) | kg | 43,7 | 49,2 | 55,1 | 60,4 |
| **Compressor** | | | | | |
| Type | | Scroll | | | |
| Number | | 4 | 4 | 4 | 4 |
| Start-up type | | Direct | | | |
| N° of loading stages | | 0/ 100 | 0/ 100 | 0/ 100 | 0/ 100 |
| **Evaporator** | | | | | |
| Type | | Plate | | | |
| Number | | 1 | 1 | 1 | 1 |
| Water flow rate | l/ s | 10,6 | 11,5 | 12,8 | 14,0 |
| Pressure drop | kPa | 21,8 | 25,7 | 31,4 | 37,7 |
| Water volume | l | 25,2 | 25,2 | 25,2 | 25,2 |
| **Condenser** | | | | | |
| Type | | Coil | | | |
| **Hydraulic connections** | | | | | |
| Type | | Threaded gas male | | | |
| Inlet diameter | inch | 3” | 3” | 3” | 3” |
| Outlet diameter | inch | 3” | 3” | 3” | 3” |
| **Weights** | | | | | |
| Shipping weight | kg | 1880 | 2010 | 2100 | 2110 |
| Operating weight | kg | 1905 | 2035 | 2125 | 2135 |
| **Additional Weights** | | | | | |
| HSE* versions | kg | 40 | 40 | 40 | 40 |
| Desuperheater versions | kg | 30 | 30 | 30 | 30 |
| With one pump | kg | 90 | 90 | 95 | 95 |
| With two pumps | kg | 205 | 205 | 215 | 915 |
| Copper Fins | kg | 520 | 700 | 880 | 880 |
| **Dimensions** | | | | | |
| Length | mm | 4300 | 4300 | 4300 | 4300 |
| Width | mm | 1100 | 1100 | 1100 | 1100 |
| Height | mm | 2300 | 2300 | 2300 | 2300 |

(1) Indicative value, always refer to the value specified on the unit's label
(*) High Efficiency Units (HSE) with inverter fans

| VLS ELN | | 524 | 604 | 704 | 804 |
|---|---|---|---|---|---|
| Power supply | V/ ph/ Hz | 400 (±10%) / 3 / 50 | | | |
| Number of circuits | | 2 | 2 | 2 | 2 |
| Capacity steps | % | 25-50-75-100 | 28-57-78-100 | 20-50-70-100 | 25-50-75-100 |
| **Refrigerant** | | | | | |
| Type | | R410A | | | |
| Charge (1) | kg | 26,6 | 30,0 | 34,4 | 39,4 |
| **Compressor** | | | | | |
| Type | | Scroll | | | |
| Number | | 4 | 4 | 4 | 4 |
| Start-up type | | Direct | | | |
| N° of loading stages | | 0/ 100 | 0/ 100 | 0/ 100 | 0/ 100 |
| **Evaporator** | | | | | |
| Type | | Plate | | | |
| Number | | 1 | 1 | 1 | 1 |
| Water flow rate | l/ s | 6,1 | 7,0 | 8,0 | 8,9 |
| Pressure drop | kPa | 24,7 | 32,3 | 42,4 | 43,4 |
| Water volume | l | 11,5 | 11,5 | 11,5 | 13,3 |
| **Condenser** | | | | | |
| Type | | Coil | | | |
| **Hydraulic connections** | | | | | |
| Type | | Threaded gas male | | | |
| Inlet diameter | inch | 2"1/ 2 | 2"1/ 2 | 2"1/ 2 | 2"1/ 2 |
| Outlet diameter | inch | 2"1/ 2 | 2"1/ 2 | 2"1/ 2 | 2"1/ 2 |
| **Weights** | | | | | |
| Shipping weight | kg | 1218 | 1448 | 1638 | 1781 |
| Operating weight | kg | 1230 | 1460 | 1650 | 1795 |
| **Additional Weights** | | | | | |
| HSE* versions | kg | 30 | 30 | 30 | 30 |
| Desuperheater versions | kg | 20 | 20 | 20 | 30 |
| With one pump | kg | 50 | 50 | 85 | 85 |
| With two pumps | kg | 140 | 140 | 200 | 200 |
| Copper Fins | kg | 380 | 380 | 520 | 520 |
| **Dimensions** | | | | | |
| Length | mm | 3300 | 3300 | 4300 | 4300 |
| Width | mm | 1100 | 1100 | 1100 | 1100 |
| Height | mm | 2300 | 2300 | 2300 | 2300 |

(1) Indicative value, always refer to the value specified on the unit's label
(*) High Efficiency Units (HSE) with inverter fans

# Technical data

| VLS ELN | | 904 | 1004 | 1104 | 1204 |
|---|---|---|---|---|---|
| Power supply | V/ ph/ Hz | 400 (±10%) / 3 / 50 | | | |
| Number of circuits | | 2 | 2 | 2 | 2 |
| Capacity steps | % | 28-50-78-100 | 25-50-75-100 | 23-50-73-100 | 25-50-75-100 |
| **Refrigerant** | | | | | |
| Type | | R410A | | | |
| Charge (1) | kg | 43,7 | 49,2 | 55,1 | 60,4 |
| **Compressor** | | | | | |
| Type | | Scroll | | | |
| Number | | 4 | 4 | 4 | 4 |
| Start-up type | | Direct | | | |
| N° of loading stages | | 0/ 100 | 0/ 100 | 0/ 100 | 0/ 100 |
| **Evaporator** | | | | | |
| Type | | Plate | | | |
| Number | | 1 | 1 | 1 | 1 |
| Water flow rate | l/ s | 10,4 | 11,2 | 12,4 | 13,6 |
| Pressure drop | kPa | 20,7 | 24,2 | 29,5 | 35,2 |
| Water volume | l | 25,2 | 25,2 | 25,2 | 25,2 |
| **Condenser** | | | | | |
| Type | | Coil | | | |
| **Hydraulic connections** | | | | | |
| Type | | Threaded gas male | | | |
| Inlet diameter | inch | 3" | 3" | 3" | 3" |
| Outlet diameter | inch | 3" | 3" | 3" | 3" |
| **Weights** | | | | | |
| Shipping weight | kg | 1915 | 2050 | 2140 | 2150 |
| Operating weight | kg | 1940 | 2075 | 2165 | 2175 |
| **Additional Weights** | | | | | |
| HSE* versions | kg | 40 | 40 | 40 | 40 |
| Desuperheater versions | kg | 30 | 30 | 30 | 30 |
| With one pump | kg | 90 | 90 | 95 | 95 |
| With two pumps | kg | 205 | 205 | 215 | 915 |
| Copper Fins | kg | 520 | 700 | 880 | 880 |
| **Dimensions** | | | | | |
| Length | mm | 4300 | 4300 | 4300 | 4300 |
| Width | mm | 1100 | 1100 | 1100 | 1100 |
| Height | mm | 2300 | 2300 | 2300 | 2300 |

(1) Indicative value, always refer to the value specified on the unit's label
(*) High Efficiency Units (HSE) with inverter fans

| VLS HT | | 524 | 604 | 704 | 804 |
|---|---|---|---|---|---|
| Power supply | V/ ph/ Hz | 400 (±10%) / 3 / 50 | | | |
| Number of circuits | | 2 | 2 | 2 | 2 |
| Capacity steps | % | 25-50-75-100 | 28-57-78-100 | 20-50-70-100 | 25-50-75-100 |
| **Refrigerant** | | | | | |
| Type | | R410A | | | |
| Charge (1) | kg | 26,6 | 30,0 | 34,4 | 39,4 |
| **Compressor** | | | | | |
| Type | | Scroll | | | |
| Number | | 4 | 4 | 4 | 4 |
| Start-up type | | Direct | | | |
| N° of loading stages | | 0/ 100 | 0/ 100 | 0/ 100 | 0/ 100 |
| **Evaporator** | | | | | |
| Type | | Plate | | | |
| Number | | 1 | 1 | 1 | 1 |
| Water flow rate | l/ s | 6,6 | 7,5 | 8,5 | 9,6 |
| Pressure drop | kPa | 28,9 | 37,0 | 48,4 | 50,2 |
| Water volume | l | 11,5 | 11,5 | 11,5 | 13,3 |
| **Condenser** | | | | | |
| Type | | Coil | | | |
| **Hydraulic connections** | | | | | |
| Type | | Threaded gas male | | | |
| Inlet diameter | inch | 2"1/ 2 | 2"1/ 2 | 2"1/ 2 | 2"1/ 2 |
| Outlet diameter | inch | 2"1/ 2 | 2"1/ 2 | 2"1/ 2 | 2"1/ 2 |
| **Weights** | | | | | |
| Shipping weight | kg | 1218 | 14448 | 1638 | 1781 |
| Operating weight | kg | 1230 | 1460 | 1650 | 1795 |
| **Additional Weights** | | | | | |
| Desuperheater versions | kg | 20 | 20 | 20 | 30 |
| With one pump | kg | 50 | 50 | 85 | 85 |
| With two pumps | kg | 140 | 140 | 200 | 200 |
| Copper Fins | kg | 380 | 380 | 520 | 520 |
| **Dimensions** | | | | | |
| Length | mm | 3300 | 3300 | 4300 | 4300 |
| Width | mm | 1100 | 1100 | 1100 | 1100 |
| Height | mm | 2300 | 2300 | 2300 | 2300 |

(1) Indicative value, always refer to the value specified on the unit's label

| VLS HT | | 904 | 1024 | 1104 | 1204 |
|---|---|---|---|---|---|
| Power supply | V/ ph/ Hz | 400 (±10%) / 3 / 50 | | | |
| Number of circuits | | 2 | 2 | 2 | 2 |
| Capacity steps | % | 28-50-78-100 | 25-50-75-100 | 23-50-73-100 | 25-50-75-100 |
| **Refrigerant** | | | | | |
| Type | | R410A | | | |
| Charge (1) | kg | 43,7 | 49,2 | 55,1 | 60,4 |
| **Compressor** | | | | | |
| Type | | Scroll | | | |
| Number | | 4 | 4 | 4 | 4 |
| Start-up type | | Direct | | | |
| N° of loading stages | | 0/ 100 | 0/ 100 | 0/ 100 | 0/ 100 |
| **Evaporator** | | | | | |
| Type | | Plate | | | |
| Number | | 1 | 1 | 1 | 1 |
| Water flow rate | l/ s | 11,1 | 12,1 | 13,5 | 15,0 |
| Pressure drop | kPa | 23,6 | 28,4 | 35,1 | 43,2 |
| Water volume | l | 25,2 | 25,2 | 25,2 | 25,2 |
| **Condenser** | | | | | |
| Type | | Coil | | | |
| **Hydraulic connections** | | | | | |
| Type | | Threaded gas male | | | |
| Inlet diameter | inch | 3” | 3” | 3” | 3” |
| Outlet diameter | inch | 3” | 3” | 3” | 3” |
| **Weight** | | | | | |
| Shipping weight | kg | 1920 | 2050 | 2140 | 2150 |
| Operating weight | kg | 1945 | 2075 | 2165 | 2175 |
| **Additional Weights** | | | | | |
| Desuperheater versions | kg | 30 | 30 | 30 | 30 |
| With one pump | kg | 90 | 90 | 95 | 95 |
| With two pumps | kg | 205 | 205 | 215 | 215 |
| Copper Fins | kg | 520 | 700 | 880 | 880 |
| **Dimensions** | | | | | |
| Length | mm | 4300 | 4300 | 4300 | 4300 |
| Width | mm | 1100 | 1100 | 1100 | 1100 |
| Height | mm | 2300 | 2300 | 2300 | 2300 |

(1) Indicative value, always refer to the value specified on the unit's label

| VLH BLN | | 524 | 604 | 704 | 804 |
|---|---|---|---|---|---|
| Power supply | V/ ph/ Hz | 400 (±10%) / 3 / 50 | | | |
| Number of circuits | | 2 | 2 | 2 | 2 |
| Capacity steps | % | 25-50-75-100 | 28-50-78-100 | 20-50-70-100 | 25-50-75-100 |
| **Refrigerant** | | | | | |
| Type | | R410A | | | |
| Charge (1) | kg | 39,9 | 37,2 | 42,6 | 48,8 |
| **Compressor** | | | | | |
| Type | | Scroll | | | |
| Number | | 4 | 4 | 4 | 4 |
| Start-up type | | Direct | | | |
| N° of loading stages | | 0/ 100 | 0/ 100 | 0/ 100 | 0/ 100 |
| **Evaporator** | | | | | |
| Type | | Plate | | | |
| Number | | 1 | 1 | 1 | 1 |
| Water flow rate | l/ s | 6,4 | 7,2 | 8,3 | 9,4 |
| Pressure drop | kPa | 28,3 | 36,1 | 47,5 | 49,1 |
| Water volume | l | 11,5 | 11,5 | 11,5 | 13,3 |
| **Condenser** | | | | | |
| Type | | Coil | | | |
| **Hydraulic connections** | | | | | |
| Type | | Threaded gas male | | | |
| Inlet diameter | inch | 2"1/ 2 | 2"1/ 2 | 2"1/ 2 | 2"1/ 2 |
| Outlet diameter | inch | 2"1/ 2 | 2"1/ 2 | 2"1/ 2 | 2"1/ 2 |
| **Weights** | | | | | |
| Shipping weight | kg | 1248 | 1473 | 1663 | 1806 |
| Operating weight | kg | 1260 | 1485 | 1675 | 1820 |
| **Additional Weights** | | | | | |
| HSE* / SIF** versions | kg | 30 | 30 | 30 | 30 |
| Desuperheater versions | kg | 20 | 20 | 20 | 30 |
| With one pump | kg | 50 | 50 | 85 | 85 |
| With two pumps | kg | 140 | 140 | 200 | 200 |
| Copper Fins | kg | 380 | 380 | 520 | 520 |
| **Dimensions** | | | | | |
| Length | mm | 3300 | 3300 | 4300 | 4300 |
| Width | mm | 1100 | 1100 | 1100 | 1100 |
| Height | mm | 2300 | 2300 | 2300 | 2300 |

(1) Indicative value, always refer to the value specified on the unit's label
(*) High Efficiency Units (HSE) with inverter fans (**) SIF Units with high static pressure fans

| VLH BLN | | 904 | 1004 | 1104 | 1204 |
|---|---|---|---|---|---|
| Power supply | V/ ph/ Hz | 400 (±10%) / 3 / 50 | | | |
| Number of circuits | | 2 | 2 | 2 | 2 |
| Capacity steps | % | 28-50-78-100 | 25-50-75-100 | 23-50-73-100 | 25-50-75-100 |
| **Refrigerant** | | | | | |
| Type | | R410A | | | |
| Charge (1) | kg | 54,1 | 61,0 | 68,3 | 74,8 |
| **Compressor** | | | | | |
| Type | | Scroll | | | |
| Number | | 4 | 4 | 4 | 4 |
| Start-up type | | Direct | | | |
| N° of loading stages | | 0/ 100 | 0/ 100 | 0/ 100 | 0/ 100 |
| **Evaporator** | | | | | |
| Type | | Plate | | | |
| Number | | 1 | 1 | 1 | 1 |
| Water flow rate | l/ s | 10,8 | 11,8 | 13,1 | 14,4 |
| Pressure drop | kPa | 22,6 | 26,8 | 33,0 | 39,7 |
| Water volume | l | 25,2 | 25,2 | 25,2 | 25,2 |
| **Condenser** | | | | | |
| Type | | Coil | | | |
| **Hydraulic connections** | | | | | |
| Type | | Threaded gas male | | | |
| Inlet diameter | inch | 3” | 3” | 3” | 3” |
| Outlet diameter | inch | 3” | 3” | 3” | 3” |
| **Weights** | | | | | |
| Shipping weight | kg | 1955 | 2010 | 2190 | 2200 |
| Operating weight | kg | 1960 | 2125 | 2215 | 2225 |
| **Additional Weights** | | | | | |
| HSE* / SIF** versions | kg | 40 | 40 | 40 | 40 |
| Desuperheater versions | kg | 30 | 30 | 30 | 30 |
| With one pump | kg | 90 | 90 | 95 | 95 |
| With two pumps | kg | 205 | 205 | 215 | 215 |
| Copper Fins | kg | 520 | 700 | 880 | 880 |
| **Dimensions** | | | | | |
| Length | mm | 4300 | 4300 | 4300 | 4300 |
| Width | mm | 1100 | 1100 | 1100 | 1100 |
| Height | mm | 2300 | 2300 | 2300 | 2300 |

(1) Indicative value, always refer to the value specified on the unit's label
(*) High Efficiency Units (HSE) with inverter fans (**) SIF Units with high static pressure fans

| VLH LN | | 524 | 604 | 704 | 804 |
|---|---|---|---|---|---|
| Power supply | V/ ph/ Hz | 400 (±10%) / 3 / 50 | | | |
| Number of circuits | | 2 | 2 | 2 | 2 |
| Capacity steps | % | 25-50-75-100 | 28-57-78-100 | 20-50-70-100 | 25-50-75-100 |
| **Refrigerant** | | | | | |
| Type | | R410A | | | |
| Charge (1) | kg | 32,9 | 37,2 | 42,6 | 48,8 |
| **Compressor** | | | | | |
| Type | | Scroll | | | |
| Number | | 4 | 4 | 4 | 4 |
| Start-up type | | Direct | | | |
| N° of loading stages | | 0/ 100 | 0/ 100 | 0/ 100 | 0/ 100 |
| **Evaporator** | | | | | |
| Type | | Plate | | | |
| Number | | 1 | 1 | 1 | 1 |
| Water flow rate | l/ s | 6,2 | 7,0 | 8,1 | 9,2 |
| Pressure drop | kPa | 26,6 | 32,3 | 43,4 | 45,6 |
| Water volume | l | 11,5 | 11,5 | 11,5 | 13,3 |
| **Condenser** | | | | | |
| Type | | Coil | | | |
| **Hydraulic connections** | | | | | |
| Type | | Threaded gas male | | | |
| Inlet diameter | inch | 2"1/ 2 | 2"1/ 2 | 2"1/ 2 | 2"1/ 2 |
| Outlet diameter | inch | 2"1/ 2 | 2"1/ 2 | 2"1/ 2 | 2"1/ 2 |
| **Weights** | | | | | |
| Shipping weight | kg | 1248 | 1473 | 1663 | 1806 |
| Operating weight | kg | 1260 | 1485 | 1675 | 1820 |
| **Additional Weights** | | | | | |
| HSE* versions | kg | 30 | 30 | 30 | 30 |
| Desuperheater versions | kg | 20 | 20 | 20 | 30 |
| With one pump | kg | 50 | 50 | 85 | 85 |
| With two pumps | kg | 140 | 140 | 200 | 200 |
| Copper Fins | kg | 380 | 380 | 520 | 520 |
| **Dimensions** | | | | | |
| Length | mm | 3300 | 3300 | 4300 | 4300 |
| Width | mm | 1100 | 1100 | 1100 | 1100 |
| Height | mm | 2300 | 2300 | 2300 | 2300 |

(1) Indicative value, always refer to the value specified on the unit's label
(*) High Efficiency Units (HSE) with inverter fans

| VLH LN | | 904 | 1004 | 1104 | 1204 |
|---|---|---|---|---|---|
| Power supply | V/ ph/ Hz | 400 (±10%) / 3 / 50 | | | |
| Number of circuits | | 2 | 2 | 2 | 2 |
| Capacity steps | % | 28-50-78-100 | 25-50-75-100 | 23-50-73-100 | 25-50-75-100 |
| **Refrigerant** | | | | | |
| Type | | R410A | | | |
| Charge (1) | kg | 54,1 | 61,0 | 68,3 | 74,8 |
| **Compressor** | | | | | |
| Type | | Scroll | | | |
| Number | | 4 | 4 | 4 | 4 |
| Start-up type | | Direct | | | |
| N° of loading stages | | 0/ 100 | 0/ 100 | 0/ 100 | 0/ 100 |
| **Evaporator** | | | | | |
| Type | | Plate | | | |
| Number | | 1 | 1 | 1 | 1 |
| Water flow rate | l/ s | 10,6 | 11,4 | 12,5 | 13,7 |
| Pressure drop | kPa | 21,5 | 24,9 | 30,2 | 36,0 |
| Water volume | l | 25,2 | 25,2 | 25,2 | 25,2 |
| **Condenser** | | | | | |
| Type | | Coil | | | |
| **Hydraulic connections** | | | | | |
| Type | | Threaded gas male | | | |
| Inlet diameter | inch | 3” | 3” | 3” | 3” |
| Outlet diameter | inch | 3” | 3” | 3” | 3” |
| **Weights** | | | | | |
| Shipping weight | kg | 1955 | 2100 | 2190 | 2200 |
| Operating weight | kg | 19801905 | 2135 | 2215 | 2225 |
| **Additional Weights** | | | | | |
| HSE* versions | kg | 40 | 40 | 40 | 40 |
| Desuperheater versions | kg | 30 | 30 | 30 | 30 |
| With one pump | kg | 90 | 90 | 95 | 95 |
| With two pumps | kg | 205 | 205 | 215 | 915 |
| Copper Fins | kg | 520 | 700 | 880 | 880 |
| **Dimensions** | | | | | |
| Length | mm | 4300 | 4300 | 4300 | 4300 |
| Width | mm | 1100 | 1100 | 1100 | 1100 |
| Height | mm | 2300 | 2300 | 2300 | 2300 |

(1) Indicative value, always refer to the value specified on the unit's label
(*) High Efficiency Units (HSE) with inverter fans

| VLH ELN | | 524 | 604 | 704 | 804 |
|---|---|---|---|---|---|
| Power supply | V/ ph/ Hz | 400 (±10%) / 3 / 50 | | | |
| Number of circuits | | 2 | 2 | 2 | 2 |
| Capacity steps | % | 25-50-75-100 | 28-57-78-100 | 20-50-70-100 | 25-50-75-100 |
| **Refrigerant** | | | | | |
| Type | | R410A | | | |
| Charge (1) | kg | 32,9 | 37,2 | 42,6 | 48,8 |
| **Compressor** | | | | | |
| Type | | Scroll | | | |
| Number | | 4 | 4 | 4 | 4 |
| Start-up type | | Direct | | | |
| N° of loading stages | | 0/ 100 | 0/ 100 | 0/ 100 | 0/ 100 |
| **Evaporator** | | | | | |
| Type | | Plate | | | |
| Number | | 1 | 1 | 1 | 1 |
| Water flow rate | l/ s | 6,1 | 7,0 | 8,0 | 8,9 |
| Pressure drop | kPa | 24,7 | 32,3 | 42,4 | 43,4 |
| Water volume | l | 11,5 | 11,5 | 11,5 | 13,3 |
| **Condenser** | | | | | |
| Type | | Coil | | | |
| **Hydraulic connections** | | | | | |
| Type | | Threaded gas male | | | |
| Inlet diameter | inch | 2"1/ 2 | 2"1/ 2 | 2"1/ 2 | 2"1/ 2 |
| Outlet diameter | inch | 2"1/ 2 | 2"1/ 2 | 2"1/ 2 | 2"1/ 2 |
| **Weights** | | | | | |
| Shipping weight | kg | 1278 | 1508 | 1698 | 1841 |
| Operating weight | kg | 1290 | 1520 | 1710 | 1855 |
| **Additional Weights** | | | | | |
| HSE* versions | kg | 30 | 30 | 30 | 30 |
| Desuperheater versions | kg | 20 | 20 | 20 | 30 |
| With one pump | kg | 50 | 50 | 85 | 85 |
| With two pumps | kg | 140 | 140 | 200 | 200 |
| Copper Fins | kg | 380 | 380 | 520 | 520 |
| **Dimensions** | | | | | |
| Length | mm | 3300 | 3300 | 4300 | 4300 |
| Width | mm | 1100 | 1100 | 1100 | 1100 |
| Height | mm | 2300 | 2300 | 2300 | 2300 |

(1) Indicative value, always refer to the value specified on the unit's label
(*) High Efficiency Units (HSE) with inverter fans

| VLH ELN | | 904 | 1004 | 1104 | 1204 |
|---|---|---|---|---|---|
| Power supply | V/ ph/ Hz | 400 (±10%) / 3 / 50 | | | |
| Number of circuits | | 2 | 2 | 2 | 2 |
| Capacity steps | % | 28-50-78-100 | 25-50-75-100 | 23-50-73-100 | 25-50-75-100 |
| **Refrigerant** | | | | | |
| Type | | R410A | | | |
| Charge (1) | kg | 54,1 | 61,1 | 68,3 | 74,8 |
| **Compressor** | | | | | |
| Type | | Scroll | | | |
| Number | | 4 | 4 | 4 | 4 |
| Start-up type | | Direct | | | |
| N° of loading stages | | 0/ 100 | 0/ 100 | 0/ 100 | 0/ 100 |
| **Evaporator** | | | | | |
| Type | | Plate | | | |
| Number | | 1 | 1 | 1 | 1 |
| Water flow rate | l/ s | 10,4 | 11,2 | 12,4 | 13,5 |
| Pressure drop | kPa | 20,7 | 24,2 | 29,5 | 35,2 |
| Water volume | l | 25,2 | 25,2 | 25,2 | 25,2 |
| **Condenser** | | | | | |
| Type | | Coil | | | |
| **Hydraulic connections** | | | | | |
| Type | | Threaded gas male | | | |
| Inlet diameter | inch | 3” | 3” | 3” | 3” |
| Outlet diameter | inch | 3” | 3” | 3” | 3” |
| **Weights** | | | | | |
| Shipping weight | kg | 1990 | 2140 | 2230 | 2240 |
| Operating weight | kg | 2015 | 2165 | 2255 | 2265 |
| **Additional Weights** | | | | | |
| HSE* versions | kg | 40 | 40 | 40 | 40 |
| Desuperheater versions | kg | 30 | 30 | 30 | 30 |
| With one pump | kg | 90 | 90 | 95 | 95 |
| With two pumps | kg | 205 | 205 | 215 | 915 |
| Copper Fins | kg | 520 | 700 | 880 | 880 |
| **Dimensions** | | | | | |
| Length | mm | 4300 | 4300 | 4300 | 4300 |
| Width | mm | 1100 | 1100 | 1100 | 1100 |
| Height | mm | 2300 | 2300 | 2300 | 2300 |

(1) Indicative value, always refer to the value specified on the unit's label
(*) High Efficiency Units (HSE) with inverter fans

| VLH HT | | 524 | 604 | 704 | 804 |
|---|---|---|---|---|---|
| Power supply | V/ ph/ Hz | 400 (±10%) / 3 / 50 | | | |
| Number of circuits | | 2 | 2 | 2 | 2 |
| Capacity steps | % | 25-50-75-100 | 28-57-78-100 | 20-50-70-100 | 25-50-75-100 |
| **Refrigerant** | | | | | |
| Type | | R410A | | | |
| Charge (1) | kg | 32,9 | 37,2 | 42,6 | 48,8 |
| **Compressor** | | | | | |
| Type | | Scroll | | | |
| Number | | 4 | 4 | 4 | 4 |
| Start-up type | | Direct | | | |
| N° of loading stages | | 0/ 100 | 0/ 100 | 0/ 100 | 0/ 100 |
| **Evaporator** | | | | | |
| Type | | Plate | | | |
| Number | | 1 | 1 | 1 | 1 |
| Water flow rate | l/ s | 6,6 | 7,5 | 8,5 | 9,6 |
| Pressure drop | kPa | 28,9 | 37,0 | 48,4 | 50,2 |
| Water volume | l | 11,5 | 11,5 | 11,5 | 13,3 |
| **Condenser** | | | | | |
| Type | | Coil | | | |
| **Hydraulic connections** | | | | | |
| Type | | Threaded gas male | | | |
| Inlet diameter | inch | 2"1/ 2 | 2"1/ 2 | 2"1/ 2 | 2"1/ 2 |
| Outlet diameter | inch | 2"1/ 2 | 2"1/ 2 | 2"1/ 2 | 2"1/ 2 |
| **Weights** | | | | | |
| Shipping weight | kg | 1278 | 1503 | 1693 | 1836 |
| Operating weight | kg | 1290 | 1515 | 1705 | 1850 |
| **Additional Weights** | | | | | |
| Desuperheater versions | kg | 20 | 20 | 20 | 30 |
| With one pump | kg | 50 | 50 | 85 | 85 |
| With two pumps | kg | 140 | 140 | 200 | 200 |
| Copper Fins | kg | 380 | 380 | 520 | 520 |
| **Dimensions** | | | | | |
| Length | mm | 3300 | 3300 | 4300 | 4300 |
| Width | mm | 1100 | 1100 | 1100 | 1100 |
| Height | mm | 2300 | 2300 | 2300 | 2300 |

(1) Indicative value, always refer to the value specified on the unit's label

| VLH HT | | 904 | 1024 | 1104 | 1204 |
|---|---|---|---|---|---|
| Power supply | V/ ph/ Hz | 400 (±10%) / 3 / 50 | | | |
| Number of circuits | | 2 | 2 | 2 | 2 |
| Capacity steps | % | 28-50-78-100 | 25-50-75-100 | 23-50-73-100 | 25-50-75-100 |
| **Refrigerant** | | | | | |
| Type | | R410A | | | |
| Charge (1) | kg | 54,1 | 61,0 | 68,3 | 74,8 |
| **Compressor** | | | | | |
| Type | | Scroll | | | |
| Number | | 4 | 4 | 4 | 4 |
| Start-up type | | Direct | | | |
| N° of loading stages | | 0/ 100 | 0/ 100 | 0/ 100 | 0/ 100 |
| **Evaporator** | | | | | |
| Type | | Plate | | | |
| Number | | 1 | 1 | 1 | 1 |
| Water flow rate | l/ s | 11,1 | 12,1 | 13,5 | 15,0 |
| Pressure drop | kPa | 23,6 | 28,4 | 35,1 | 43,2 |
| Water volume | l | 25,2 | 25,2 | 25,2 | 25,2 |
| **Condenser** | | | | | |
| Type | | Coil | | | |
| **Hydraulic connections** | | | | | |
| Type | | Threaded gas male | | | |
| Inlet diameter | inch | 3” | 3” | 3” | 3” |
| Outlet diameter | inch | 3” | 3” | 3” | 3” |
| **Weights** | | | | | |
| Shipping weight | kg | 1995 | 2140 | 2230 | 2240 |
| Operating weight | kg | 2020 | 2165 | 2255 | 2265 |
| **Additional Weights** | | | | | |
| Desuperheater versions | kg | 30 | 30 | 30 | 30 |
| With one pump | kg | 90 | 90 | 95 | 95 |
| With two pumps | kg | 205 | 205 | 215 | 215 |
| Copper Fins | kg | 520 | 700 | 880 | 880 |
| **Dimensions** | | | | | |
| Length | mm | 4300 | 4300 | 4300 | 4300 |
| Width | mm | 1100 | 1100 | 1100 | 1100 |
| Height | mm | 2300 | 2300 | 2300 | 2300 |

(1) Indicative value, always refer to the value specified on the unit's label

| VLC BLN | | 524 | 604 | 704 | 804 |
|---|---|---|---|---|---|
| Power supply | V/ ph/ Hz | 400 (±10%) / 3 / 50 | | | |
| Number of circuits | | 2 | 2 | 2 | 2 |
| Capacity steps | % | 25-50-75-100 | 28-57-78-100 | 20-50-70-100 | 25-50-75-100 |
| **Refrigerant** | | | | | |
| Type | | R410A | | | |
| **Compressor** | | | | | |
| Type | | Scroll | | | |
| Number | | 4 | 4 | 4 | 4 |
| Start-up type | | Direct | | | |
| N° of loading stages | | 0/ 100 | 0/ 100 | 0/ 100 | 0/ 100 |
| **Condenser** | | | | | |
| Type | | Coil | | | |
| **Refrigerant connections** | | | | | |
| Inlet diameter | inch | 7/ 8" | 7/ 8" | 7/ 8" | 7/ 8" |
| Outlet diameter | inch | 15/ 8" | 15/ 8" | 15/ 8" | 15/ 8" |
| **Weights** | | | | | |
| Shipping weight | kg | 1080 | 1300 | 1490 | 1615 |
| **Additional Weights** | | | | | |
| HSE* / SIF** versions | kg | 30 | 30 | 30 | 30 |
| **Dimensions** | | | | | |
| Length | mm | 3300 | 3300 | 4300 | 4300 |
| Width | mm | 1100 | 1100 | 1100 | 1100 |
| Height | mm | 2300 | 2300 | 2300 | 2300 |

(*) High Efficiency Units (HSE) with inverter fans
(**) SIF Units with high static pressure fans

| VLC BLN | | 904 | 1004 | 1104 | 1204 |
|---|---|---|---|---|---|
| Power supply | V/ ph/ Hz | 400 (±10%) / 3 / 50 | | | |
| Number of circuits | | 2 | 2 | 2 | 2 |
| Capacity steps | % | 28-50-78-100 | 25-50-75-100 | 23-50-73-100 | 25-50-75-100 |
| **Refrigerant** | | | | | |
| Type | | R410A | | | |
| **Compressor** | | | | | |
| Type | | Scroll | | | |
| Number | | 4 | 4 | 4 | 4 |
| Start-up type | | Direct | | | |
| N° of loading stages | | 0/ 100 | 0/ 100 | 0/ 100 | 0/ 100 |
| **Condenser** | | | | | |
| Type | | Coil | | | |
| **Refrigerant connections** | | | | | |
| Inlet diameter | inch | 1 1/ 8" | 1 1/ 8" | 1 1/ 8" | 1 1/ 8" |
| Outlet diameter | inch | 2 1/ 8" | 2 1/ 8" | 2 1/ 8" | 2 1/ 8" |
| **Weights** | | | | | |
| Shipping weight | kg | 1700 | 1825 | 1910 | 1920 |
| **Additional Weights** | | | | | |
| HSE* / SIF** versions | kg | 40 | 40 | 40 | 40 |
| **Dimensions** | | | | | |
| Length | mm | 3300 | 3300 | 4300 | 4300 |
| Width | mm | 1100 | 1100 | 1100 | 1100 |
| Height | mm | 2300 | 2300 | 2300 | 2300 |

(*) High Efficiency Units (HSE) with inverter fans
(**) SIF Units with high static pressure fans

| VLC LN | | 524 | 604 | 704 | 804 |
|---|---|---|---|---|---|
| Power supply | V/ ph/ Hz | 400 (±10%) / 3 / 50 | | | |
| Number of circuits | | 2 | 2 | 2 | 2 |
| Capacity steps | % | 25-50-75-100 | 28-57-78-100 | 20-50-70-100 | 25-50-75-100 |
| **Refrigerant** | | | | | |
| Type | | R410A | | | |
| **Compressor** | | | | | |
| Type | | Scroll | | | |
| Number | | 4 | 4 | 4 | 4 |
| Start-up type | | Direct | | | |
| N° of loading stages | | 0/ 100 | 0/ 100 | 0/ 100 | 0/ 100 |
| **Condenser** | | | | | |
| Type | | Coil | | | |
| **Refrigerant connections** | | | | | |
| Inlet diameter | inch | 7/ 8" | 7/ 8" | 7/ 8" | 7/ 8" |
| Outlet diameter | inch | 15/ 8" | 15/ 8" | 15/ 8" | 15/ 8" |
| **Weight** | | | | | |
| Shipping weight | kg | 1080 | 1300 | 1490 | 1615 |
| **Additional Weight** | | | | | |
| HSE* versions | kg | 30 | 30 | 30 | 30 |
| **Dimensions** | | | | | |
| Length | mm | 3300 | 3300 | 4300 | 4300 |
| Width | mm | 1100 | 1100 | 1100 | 1100 |
| Height | mm | 2300 | 2300 | 2300 | 2300 |

(*) High Efficiency Units (HSE) with inverter fans

| VLC LN | | 904 | 1004 | 1104 | 1204 |
|---|---|---|---|---|---|
| Power supply | V/ ph/ Hz | 400 (±10%) / 3 / 50 | | | |
| Number of circuits | | 2 | 2 | 2 | 2 |
| Capacity steps | % | 28-50-78-100 | 25-50-75-100 | 23-50-73-100 | 25-50-75-100 |
| **Refrigerant** | | | | | |
| Type | | R410A | | | |
| **Compressor** | | | | | |
| Type | | Scroll | | | |
| Number | | 4 | 4 | 4 | 4 |
| Start-up type | | Direct | | | |
| N° of loading stages | | 0/ 100 | 0/ 100 | 0/ 100 | 0/ 100 |
| **Condenser** | | | | | |
| Type | | Coil | | | |
| **Refrigerant connections** | | | | | |
| Inlet diameter | inch | 1 1/ 8" | 1 1/ 8" | 1 1/ 8" | 1 1/ 8" |
| Outlet diameter | inch | 2 1/ 8" | 2 1/ 8" | 2 1/ 8" | 2 1/ 8" |
| **Weights** | | | | | |
| Shipping weight | kg | 1700 | 1825 | 1910 | 1920 |
| **Additional Weights** | | | | | |
| HSE* versions | kg | 40 | 40 | 40 | 40 |
| **Dimensions** | | | | | |
| Length | mm | 3300 | 3300 | 4300 | 4300 |
| Width | mm | 1100 | 1100 | 1100 | 1100 |
| Height | mm | 2300 | 2300 | 2300 | 2300 |

(*) High Efficiency Units (HSE) with inverter fans

| VLC ELN | | 524 | 604 | 704 | 804 |
|---|---|---|---|---|---|
| Power supply | V/ ph/ Hz | 400 (±10%) / 3 / 50 | | | |
| Number of circuits | | 2 | 2 | 2 | 2 |
| Capacity steps | % | 25-50-75-100 | 28-57-78-100 | 20-50-70-100 | 25-50-75-100 |
| **Refrigerant** | | | | | |
| Type | | R410A | | | |
| **Compressor** | | | | | |
| Type | | Scroll | | | |
| Number | | 4 | 4 | 4 | 4 |
| Start-up type | | Direct | | | |
| N° of loading stages | | 0/ 100 | 0/ 100 | 0/ 100 | 0/ 100 |
| **Condenser** | | | | | |
| Type | | Coil | | | |
| **Refrigerant connections** | | | | | |
| Inlet diameter | inch | 7/ 8" | 7/ 8" | 7/ 8" | 7/ 8" |
| Outlet diameter | inch | 15/ 8" | 15/ 8" | 15/ 8" | 15/ 8" |
| **Weights** | | | | | |
| Shipping weight | kg | 1110 | 1335 | 1525 | 1650 |
| **Additional Weights** | | | | | |
| HSE* versions | kg | 30 | 30 | 30 | 30 |
| **Dimensions** | | | | | |
| Length | mm | 3300 | 3300 | 4300 | 4300 |
| Width | mm | 1100 | 1100 | 1100 | 1100 |
| Height | mm | 2300 | 2300 | 2300 | 2300 |

(*) High Efficiency Units (HSE) with inverter fans

| VLC ELN | | 904 | 1004 | 1104 | 1204 |
|---|---|---|---|---|---|
| Power supply | V/ ph/ Hz | 400 (±10%) / 3 / 50 | | | |
| Number of circuits | | 2 | 2 | 2 | 2 |
| Capacity steps | % | 28-50-78-100 | 25-50-75-100 | 23-50-73-100 | 25-50-75-100 |
| **Refrigerant** | | | | | |
| Type | | R410A | | | |
| **Compressor** | | | | | |
| Type | | Scroll | | | |
| Number | | 4 | 4 | 4 | 4 |
| Start-up type | | Direct | | | |
| N° of loading stages | | 0/ 100 | 0/ 100 | 0/ 100 | 0/ 100 |
| **Condenser** | | | | | |
| Type | | Coil | | | |
| **Refrigerant connections** | | | | | |
| Inlet diameter | inch | 1 1/ 8" | 1 1/ 8" | 1 1/ 8" | 1 1/ 8" |
| Outlet diameter | inch | 2 1/ 8" | 2 1/ 8" | 2 1/ 8" | 2 1/ 8" |
| **Weights** | | | | | |
| Shipping weight | kg | 1735 | 1865 | 1950 | 1960 |
| **Additional Weights** | | | | | |
| HSE* versions | kg | 40 | 40 | 40 | 40 |
| **Dimensions** | | | | | |
| Length | mm | 3300 | 3300 | 4300 | 4300 |
| Width | mm | 1100 | 1100 | 1100 | 1100 |
| Height | mm | 2300 | 2300 | 2300 | 2300 |

(*) High Efficiency Units (HSE) with inverter fans

| VLC HT | | 524 | 604 | 704 | 804 |
|---|---|---|---|---|---|
| Power supply | V/ ph/ Hz | 400 (±10%) / 3 / 50 | | | |
| Number of circuits | | 2 | 2 | 2 | 2 |
| Capacity steps | % | 25-50-75-100 | 28-57-78-100 | 20-50-70-100 | 25-50-75-100 |
| **Refrigerant** | | | | | |
| Type | | R410A | | | |
| **Compressor** | | | | | |
| Type | | Scroll | | | |
| Number | | 4 | 4 | 4 | 4 |
| Start-up type | | Direct | | | |
| N° of loading stages | | 0/ 100 | 0/ 100 | 0/ 100 | 0/ 100 |
| **Condenser** | | | | | |
| Type | | Coil | | | |
| **Refrigerant connections** | | | | | |
| Inlet diameter | inch | 7/ 8" | 7/ 8" | 7/ 8" | 7/ 8" |
| Outlet diameter | inch | 15/ 8" | 15/ 8" | 15/ 8" | 15/ 8" |
| **Weights** | | | | | |
| Shipping weight | kg | 1110 | 1335 | 1525 | 1650 |
| **Additional Weights** | | | | | |
| Desuperheater versions | kg | 20 | 20 | 20 | 20 |
| With one pump | kg | 50 | 50 | 85 | 85 |
| With two pumps | kg | 140 | 140 | 200 | 200 |
| Copper Fins | kg | 380 | 380 | 520 | 520 |
| **Dimensions** | | | | | |
| Length | mm | 3300 | 3300 | 4300 | 4300 |
| Width | mm | 1100 | 1100 | 1100 | 1100 |
| Height | mm | 2300 | 2300 | 2300 | 2300 |

| VLC HT | | 904 | 1004 | 1104 | 1204 |
|---|---|---|---|---|---|
| Power supply | V/ ph/ Hz | 400 (±10%) / 3 / 50 | | | |
| Number of circuits | | 2 | 2 | 2 | 2 |
| Capacity steps | % | 28-50-78-100 | 25-50-75-100 | 23-50-730-100 | 25-50-75-100 |
| **Refrigerant** | | | | | |
| Type | | R410A | | | |
| **Compressor** | | | | | |
| Type | | Scroll | | | |
| Number | | 4 | 4 | 4 | 4 |
| Start-up type | | Direct | | | |
| N° of loading stages | | 0/ 100 | 0/ 100 | 0/ 100 | 0/ 100 |
| **Condenser** | | | | | |
| Type | | Coil | | | |
| **Refrigerant connections** | | | | | |
| Inlet diameter | inch | 1 1/ 8" | 1 1/ 8" | 1 1/ 8" | 1 1/ 8" |
| Outlet diameter | inch | 2 1/ 8" | 2 1/ 8" | 2 1/ 8" | 2 1/ 8" |
| **Weights** | | | | | |
| Shipping weight | kg | 1735 | 1865 | 1950 | 1960 |
| **Additional Weights** | | | | | |
| Desuperheater versions | kg | 30 | 30 | 30 | 30 |
| With one pump | kg | 90 | 90 | 95 | 95 |
| With two pumps | kg | 205 | 205 | 210 | 210 |
| Copper Fins | kg | 520 | 520 | 880 | 880 |
| **Dimensions** | | | | | |
| Length | mm | 3300 | 3300 | 4300 | 4300 |
| Width | mm | 1100 | 1100 | 1100 | 1100 |
| Height | mm | 2300 | 2300 | 2300 | 2300 |

| VLR | | 524 | 604 | 704 | 804 |
|---|---|---|---|---|---|
| Power supply | V/ ph/ Hz | 400 (±10%) / 3 / 50 | | | |
| Number of circuits | | 2 | 2 | 2 | 2 |
| Capacity steps | % | 25-50-75-100 | 28-57-78-100 | 20-50-70-100 | 25-50-75-100 |
| **Refrigerant** | | | | | |
| Type | | R410A | | | |
| Charge (1) | kg | 26,6 | 30,4 | 34,4 | 39,4 |
| **Compressor** | | | | | |
| Type | | Scroll | | | |
| Number | | 4 | 4 | 4 | 4 |
| Start-up type | | Direct | | | |
| N° of loading stages | | 0/ 100 | 0/ 100 | 0/ 100 | 0/ 100 |
| **Evaporator** | | | | | |
| Type | | Plate | | | |
| Number | | 1 | 1 | 1 | 1 |
| Water flow rate | l/ s | 6,5 | 7,4 | 8,5 | 9,5 |
| Pressure drop | kPa | 28,3 | 36,1 | 47,5 | 49,1 |
| Water volume | l | 11,5 | 11,5 | 11,5 | 13,3 |
| **Hydraulic connections** | | | | | |
| Type | | Threaded gas male | | | |
| Inlet diameter | inch | 2"1/ 2 | 2"1/ 2 | 2"1/ 2 | 2"1/ 2 |
| Outlet diameter | inch | 2"1/ 2 | 2"1/ 2 | 2"1/ 2 | 2"1/ 2 |
| **Recovery condenser** | | | | | |
| Type | | Plate | | | |
| Number | | 1 | 1 | 1 | 1 |
| Water flow rate | l/ s | 8,2 | 9,1 | 10,6 | 12,0 |
| Pressure drop | kPa | 44,6 | 55,3 | 75,3 | 78,5 |
| Water volume | l | 11,5 | 11,5 | 11,5 | 13,3 |
| **Hydraulic connections** | | | | | |
| Type | | Threaded gas male | | | |
| Inlet diameter | inch | 2"1/ 2 | 2"1/ 2 | 2"1/ 2 | 2"1/ 2 |
| Outlet diameter | inch | 2"1/ 2 | 2"1/ 2 | 2"1/ 2 | 2"1/ 2 |
| **Weights** | | | | | |
| Shipping weight | kg | 1288 | 1288 | 1703 | 1856 |
| Operating weight | kg | 1300 | 1300 | 1715 | 1870 |
| **Additional Weights** | | | | | |
| EIN versions | kg | 30 | 35 | 35 | 35 |
| HSE*/ SIF** versions | kg | 30 | 30 | 30 | 30 |
| **Dimensions** | | | | | |
| Length | mm | 3300 | 3300 | 4300 | 4300 |
| Width | mm | 1100 | 1100 | 1100 | 1100 |
| Height | mm | 2300 | 2300 | 2300 | 2300 |

(1) Indicative value, always refer to the value specified on the unit's label
(*) High Efficiency Units (HSE) with inverter fans (**) SIF Units with high static pressure fans

| VLR | | 904 | 1004 | 1104 | 1204 |
|---|---|---|---|---|---|
| Power supply | V/ ph/ Hz | 400 (±10%) / 3 / 50 | | | |
| Number of circuits | | 2 | 2 | 2 | 2 |
| Capacity steps | % | 28-50-78-100 | 25-50-75-100 | 23-50-73-100 | 25-50-75-100 |
| **Refrigerant** | | | | | |
| Type | | R410A | | | |
| Charge (1) | kg | 43,7 | 49,2 | 55,1 | 60,4 |
| **Compressor** | | | | | |
| Type | | Scroll | | | |
| Number | | 4 | 4 | 4 | 4 |
| Start-up type | | Direct | | | |
| N° of loading stages | | 0/ 100 | 0/ 100 | 0/ 100 | 0/ 100 |
| **Evaporator** | | | | | |
| Type | | Plate | | | |
| Number | | 1 | 1 | 1 | 1 |
| Water flow rate | l/ s | 10,9 | 12,0 | 13,4 | 14,7 |
| Pressure drop | kPa | 23,1 | 27,7 | 34,4 | 41,7 |
| Water volume | l | 25,2 | 25,2 | 25,2 | 25,2 |
| **Hydraulic connections** | | | | | |
| Type | | Threaded gas male | | | |
| Inlet diameter | inch | 3” | 3” | 3” | 3” |
| Outlet diameter | inch | 3” | 3” | 3” | 3” |
| **Recovery condenser** | | | | | |
| Type | | Plate | | | |
| Number | | 1 | 1 | 1 | 1 |
| Water flow rate | l/ s | 13,8 | 14,8 | 16,7 | 18,6 |
| Pressure drop | kPa | 36,6 | 42,5 | 53,5 | 66,4 |
| Water volume | l | 25,2 | 25,2 | 25,2 | 25,2 |
| **Hydraulic connections** | | | | | |
| Type | | Threaded gas male | | | |
| Inlet diameter | inch | 3” | 3” | 3” | 3” |
| Outlet diameter | inch | 3” | 3” | 3” | 3” |
| **Weights** | | | | | |
| Shipping weight | kg | 2050 | 2180 | 2270 | 2280 |
| Operating weight | kg | 2075 | 2205 | 2295 | 2305 |
| **Additional Weights** | | | | | |
| EIN versions | kg | 35 | 40 | 40 | 40 |
| HSE* / SIF** versions | kg | 40 | 40 | 40 | 40 |
| **Dimensions** | | | | | |
| Length | mm | 4300 | 4300 | 4300 | 4300 |
| Width | mm | 1100 | 1100 | 1100 | 1100 |
| Height | mm | 2300 | 2300 | 2300 | 2300 |

(1) Indicative value, always refer to the value specified on the unit's label
(*) High Efficiency Units (HSE) with inverter fans (**) SIF Units with high static pressure fans

## 8.3 Unit Electrical Data

| VLS/ VLH/ VLC/ VLR BLN | | 524 | 604 | 704 | 804 | 904 | 1004 | 1104 | 1204 |
|---|---|---|---|---|---|---|---|---|---|
| Rated voltage | V/ ph/ Hz | 400 (±10%) / 3/ 50 | | | | | | | |
| Max. absorbed power | kW | 60,0 | 69,6 | 80,8 | 96,4 | 105,2 | 112,0 | 130,0 | 148,0 |
| Rated current | A | 88,0 | 100,0 | 112,0 | 120,0 | 142,0 | 160,0 | 172,0 | 184,0 |
| Max. current FIA | A | 148 | 156,0 | 186,0 | 172,0 | 193,0 | 210,0 | 239,0 | 268,0 |
| Max. start-up current IRA | A | 271,0 | 280,0 | 350,0 | 357,0 | 278,0 | 433,5 | 486,0 | 515,0 |
| External fuses | A | 200,0 | 200,0 | 250,0 | 250,0 | 250,0 | 250,0 | 315,0 | 315,0 |
| Max. cable section (*) | $mm^2$ | 3x95 | 3x95 | 3x120 | 3x120 | 3x120 | 3x120 | 3x185 | 3x185 |
| **Exchanger Resistance** | | | | | | | | | |
| Rated voltage | V/ ph/ Hz | 230 (±10%) / 1/ 50 | | | | | | | |
| Max. absorbed power | kW | 130 | | | | | | | |

| VLS/ VLH/ VLC/ VLR LN | | 524 | 604 | 704 | 804 | 904 | 1004 | 1104 | 1204 |
|---|---|---|---|---|---|---|---|---|---|
| Rated voltage | V/ ph/ Hz | 400 (±10%) / 3/ 50 | | | | | | | |
| Max. absorbed power | kW | 58,5 | 67,5 | 78,6 | 94,2 | 102,2 | 109,0 | 127,0 | 145,0 |
| Rated current | A | 84,6 | 94,9 | 106,9 | 114,9 | 135,2 | 153,2 | 165,2 | 177,2 |
| Max. current FIA | A | 144,6 | 150,9 | 180,9 | 166,9 | 186,2 | 203,2 | 232,2 | 261,2 |
| Max. start-up current IRA | A | 276,6 | 274,9 | 344,9 | 351,9 | 371,2 | 426,7 | 479,2 | 508,2 |
| External fuses | A | 200,0 | 200,0 | 250,0 | 250,0 | 250,0 | 250,0 | 315,0 | 315,0 |
| Max. cable section (*) | $mm^2$ | 3x95 | 3x95 | 3x120 | 3x120 | 3x120 | 3x120 | 3x185 | 3x185 |
| **Exchanger Resistance** | | | | | | | | | |
| Rated voltage | V/ ph/ Hz | 230 (±10%) / 1/ 50 | | | | | | | |
| Max. absorbed power | kW | 130 | | | | | | | |

| VLS/ VLH/ VLC/ VLR ELN | | 524 | 604 | 704 | 804 | 904 | 1004 | 1104 | 1204 |
|---|---|---|---|---|---|---|---|---|---|
| Rated voltage | V/ ph/ Hz | 400 (±10%) / 3/ 50 | | | | | | | |
| Max. absorbed power | kW | 58,5 | 67,4 | 78,6 | 94,2 | 102,2 | 109,0 | 127,0 | 145,0 |
| Rated current | A | 84,6 | 94,9 | 106,9 | 114,9 | 135,2 | 153,2 | 165,2 | 177,2 |
| Max. current FIA | A | 144,6 | 150,9 | 180,9 | 166,9 | 186,2 | 203,2 | 232,2 | 261,2 |
| Max. start-up current IRA | A | 267,6 | 274,9 | 344,9 | 351,9 | 371,2 | 426,7 | 479,2 | 508,2 |
| External fuses | A | 200,0 | 200,0 | 250,0 | 250,0 | 250,0 | 250,0 | 315,0 | 315,0 |
| Max. cable section (*) | $mm^2$ | 3x95 | 3x95 | 3x120 | 3x120 | 3x120 | 3x120 | 3x185 | 3x185 |
| **Exchanger Resistance** | | | | | | | | | |
| Rated voltage | V/ ph/ Hz | 230 (±10%) / 1/ 50 | | | | | | | |
| Max. absorbed power | kW | 130 | | | | | | | |

(*) The dimensioning of the unit's power cables is the responsibility of the installer, who shall consider: the rating, the maximum working temperature in the room, the type of insulation and the cable laying, the maximum length of the power supply line.

| VLS/ VLH/ VLC/ VLR HSE BLN | | 524 | 604 | 704 | 804 | 904 | 1004 | 1104 | 1204 |
|---|---|---|---|---|---|---|---|---|---|
| Rated voltage | V/ ph/ Hz | 400 (±10%) / 3 / 50 | | | | | | | |
| Max. absorbed power | kW | 60,4 | 70,2 | 81,4 | 97,0 | 106,0 | 112,8 | 130,8 | 148,8 |
| Rated current | A | 87,4 | 99,1 | 114,1 | 119,1 | 140,8 | 158,8 | 170,8 | 182,8 |
| Max. current FIA | A | 147,4 | 155,1 | 185,1 | 171,1 | 191,8 | 208,8 | 237,8 | 266,8 |
| Max. start-up current IRA | A | 270,4 | 279,1 | 349,1 | 356,1 | 376,8 | 432,3 | 484,8 | 513,8 |
| External fuses | A | 200,0 | 200,0 | 250,0 | 250,0 | 250,0 | 250,0 | 315,0 | 315,0 |
| Max. cable section (*) | $mm^2$ | 3x95 | 3x95 | 3x120 | 3x120 | 3x120 | 3x120 | 3x185 | 3x185 |
| **Exchanger Resistance** | | | | | | | | | |
| Rated voltage | V/ ph/ Hz | 230 (±10%) / 1 / 50 | | | | | | | |
| Max. absorbed power | kW | 130 | | | | | | | |

| VLS/ VLH/ VLC/ VLR HSE LN | | 524 | 604 | 704 | 804 | 904 | 1004 | 1104 | 1204 |
|---|---|---|---|---|---|---|---|---|---|
| Rated voltage | V/ ph/ Hz | 400 (±10%) / 3 / 50 | | | | | | | |
| Max. absorbed power | kW | 60,4 | 70,2 | 81,4 | 97,0 | 106,0 | 112,8 | 130,8 | 148,8 |
| Rated current | A | 87,4 | 99,1 | 111,1 | 119,1 | 140,8 | 158,8 | 170,8 | 182,8 |
| Max. current FIA | A | 147,4 | 155,1 | 185,1 | 171,1 | 191,8 | 208,8 | 237,8 | 266,8 |
| Max. start-up current IRA | A | 270,4 | 279,1 | 349,1 | 356,1 | 376,8 | 432,3 | 484,8 | 513,8 |
| External fuses | A | 200,0 | 200,0 | 250,0 | 250,0 | 250,0 | 250,0 | 315,0 | 315,0 |
| Max. cable section (*) | $mm^2$ | 3x95 | 3x95 | 3x120 | 3x120 | 3x120 | 3x120 | 3x185 | 3x185 |
| **Exchanger Resistance** | | | | | | | | | |
| Rated voltage | V/ ph/ Hz | 230 (±10%) / 1 / 50 | | | | | | | |
| Max. absorbed power | kW | 130 | | | | | | | |

| VLS/ VLH/ VLC/ VLR HSE ELN | | 524 | 604 | 704 | 804 | 904 | 1004 | 1104 | 1204 |
|---|---|---|---|---|---|---|---|---|---|
| Rated voltage | V/ ph/ Hz | 400 (±10%) / 3 / 50 | | | | | | | |
| Max. absorbed power | kW | 60,4 | 70,2 | 81,4 | 97,0 | 106,0 | 112,8 | 130,8 | 148,8 |
| Rated current | A | 87,4 | 99,1 | 111,1 | 119,1 | 140,8 | 158,8 | 170,8 | 182,8 |
| Max. current FIA | A | 147,4 | 155,1 | 185,1 | 171,1 | 191,8 | 208,8 | 237,8 | 266,8 |
| Max. start-up current IRA | A | 270,4 | 279,1 | 349,1 | 356,1 | 376,8 | 432,3 | 484,8 | 513,8 |
| External fuses | A | 200,0 | 200,0 | 250,0 | 250,0 | 250,0 | 250,0 | 315,0 | 315,0 |
| Max. cable section (*) | $mm^2$ | 3x95 | 3x95 | 3x120 | 3x120 | 3x120 | 3x120 | 3x185 | 3x185 |
| **Exchanger Resistance** | | | | | | | | | |
| Rated voltage | V/ ph/ Hz | 230 (±10%) / 1 / 50 | | | | | | | |
| Max. absorbed power | kW | 130 | | | | | | | |

(*) The dimensioning of the unit's power cables is the responsibility of the installer, who shall consider: the rating, the maximum working temperature in the room, the type of insulation and the cable laying, the maximum length of the power supply line.

| VLS/ VLH/ VLC/ VLR SIF | | 524 | 604 | 704 | 804 | 904 | 1004 | 1104 | 1204 |
|---|---|---|---|---|---|---|---|---|---|
| Rated voltage | V/ ph/ Hz | 400 (±10%) / 3 / 50 | | | | | | | |
| Max. absorbed power | kW | 60,4 | 70,2 | 81,4 | 97,0 | 106,0 | 112,8 | 130,8 | 148,8 |
| Rated current | A | 87,4 | 99,1 | 111,1 | 119,1 | 140,8 | 158,8 | 170,8 | 182,8 |
| Max. current FIA | A | 147,4 | 155,1 | 185,1 | 171,1 | 191,8 | 208,8 | 237,8 | 266,8 |
| Max. start-up current IRA | A | 270,4 | 279,1 | 349,1 | 356,1 | 376,8 | 432,3 | 484,8 | 513,8 |
| External fuses | A | 200,0 | 200,0 | 250,0 | 250,0 | 250,0 | 250,0 | 315,0 | 315,0 |
| Max. cable section (*) | $mm^2$ | 3x95 | 3x95 | 3x120 | 3x120 | 3x120 | 3x120 | 3x185 | 3x185 |
| **Exchanger Resistance** | | | | | | | | | |
| Rated voltage | V/ ph/ Hz | 230 (±10%) / 1 / 50 | | | | | | | |
| Max. absorbed power | kW | 130 | | | | | | | |

(*) The dimensioning of the unit's power cables is the responsibility of the installer, who shall consider: the rating, the maximum working temperature in the room, the type of insulation and the cable laying, the maximum length of the power supply line.

## Compressors Electrical Data

| VLS/ VLH/ VLC/ VLR | | 504 | 604 | 704 | 804 | 904 | 1004 | 1104 | 1204 |
|---|---|---|---|---|---|---|---|---|---|
| Number | | 4 | 4 | 4 | 4 | 4 | 4 | 4 | 4 |
| Nominal power input | kW | (11,5+11,5) x2 | (12,5+12,5) x2 | (12,5+17,2) x2 | (15,9+15,9) x2 | (15,9+22,3) x2 | (22,3+22,3) x2 | (22,3+25,5) x2 | (25,5+25,5) x2 |
| Max. absorbed power | kW | (14,0+14,0) x2 | (15,9+15,9) x2 | (15,9+21,5) x2 | (22,6+22,6) x2 | (22,6+26,0) x2 | (26,0+26,0) x2 | (26,0+35,0) x2 | (35,0+35,0) x2 |
| Rated current | A | (35,0+35,0) x2 | (36,0+36,0) x2 | (36,0+51,0) x2 | (40,0+40,0) x2 | (40,0+48,5) x2 | (48,5+48,5) x2 | (48,5+63,0) x2 | (63,0+63,0) x2 |
| Max. current | A | (158+158) x2 | (160+160) x2 | (160+215) x2 | (225+225) x2 | (225+272) x2 | (225+272) x2 | (272+310) x2 | (310+310) x2 |
| Oil pan resistor | W | (65+65) x2 | (75+75) x2 | (75+75) x2 | (120+120) x2 | (120+150) x2 | (150+150) x2 | (150+150) x2 | (150+150) x2 |

## Fans Electrical Data

| VLS/ VLH/ VLC/ VLR BLN | | 524 | 604 | 704 | 804 | 904 | 1004 | 1104 | 1204 |
|---|---|---|---|---|---|---|---|---|---|
| Power supply | V/ ph/ Hz | 400 (±10%)/ 3/ 50 | | | | | | | |
| Number | | 2 | 3 | 3 | 3 | 4 | 4 | 4 | 4 |
| Rated power | kW | 2,0 | 2,0 | 2,0 | 2,0 | 2,0 | 2,0 | 2,0 | 2,0 |
| Absorbed rated current FLA | A | 4,0 | 4,0 | 4,0 | 4,0 | 4,0 | 4,0 | 4,0 | 4,0 |

| VLS/ VLH/ VLC/ VLR LN/ ELN | | 524 | 604 | 704 | 804 | 904 | 1004 | 1104 | 1204 |
|---|---|---|---|---|---|---|---|---|---|
| Power supply | V/ ph/ Hz | 400 (±10%)/ 3/ 50 | | | | | | | |
| Number | | 2 | 3 | 3 | 3 | 4 | 4 | 4 | 4 |
| Rated power | kW | 1,25 | 1,25 | 1,25 | 1,25 | 1,25 | 1,25 | 1,25 | 1,25 |
| Absorbed rated current FLA | A | 2,3 | 2,3 | 2,3 | 2,3 | 2,3 | 2,3 | 2,3 | 2,3 |

| VLS/ VLH/ VLC/ VLR HSE BLN/ LN/ ELN | | 524 | 604 | 704 | 804 | 904 | 1004 | 1104 | 1204 |
|---|---|---|---|---|---|---|---|---|---|
| Power supply | V/ ph/ Hz | 400 (±10%)/ 3/ 50 | | | | | | | |
| Number | | 2 | 3 | 3 | 3 | 4 | 4 | 4 | 4 |
| Rated power | kW | 2,6 | 2,6 | 2,6 | 2,6 | 2,6 | 2,6 | 2,6 | 2,6 |
| Absorbed rated current FLA | A | 4,1 | 4,1 | 4,1 | 4,1 | 4,1 | 4,1 | 4,1 | 4,1 |

| VLS/ VLH/ VLC/ VLR SIF | | 524 | 604 | 704 | 804 | 904 | 1004 | 1104 | 1204 |
|---|---|---|---|---|---|---|---|---|---|
| Power supply | V/ ph/ Hz | 400 (±10%)/ 3/ 50 | | | | | | | |
| Number | | 2 | 3 | 3 | 3 | 4 | 4 | 4 | 4 |
| Rated power | kW | 2,6 | 2,6 | 2,6 | 2,6 | 2,6 | 2,6 | 2,6 | 2,6 |
| Absorbed rated current FLA | A | 4,1 | 4,1 | 4,1 | 4,1 | 4,1 | 4,1 | 4,1 | 4,1 |

## 8.4 Position of shock absorbers and weight distribution on supports

### VLS/ VLH/ VLC 524-604 BLN/ LN/ ELN/ HT Version

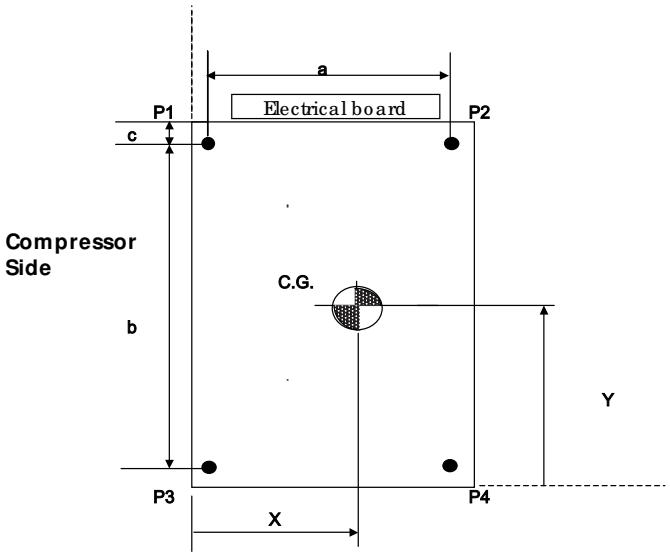


P1 - P4 Unit positions

### VLS 524 - 604 Al/ Cu BLN/ LN/ ELN/ HT Version

| VLS Al/ Cu | Weight distribution (kg) | | | | Operating Weight | Shipping Weight | P1-P4 coordinates* | | | CG coordinates | |
|---|---|---|---|---|---|---|---|---|---|---|---|
| | F1 (kg) | F2 (kg) | F3 (kg) | F4 (kg) | (kg) | (kg) | a (mm)* | b (mm) | c (mm) | x (mm) | y (mm) |
| **524** | 307 | 208 | 393 | 293 | 1200 | 1188 | 1044 | 2200 | 396 | 450 | 1350 |
| **604** | 389 | 236 | 476 | 323 | 1425 | 1413 | 1044 | 2200 | 396 | 450 | 1350 |

### VLH 524 - 604 Al/ Cu BLN/ LN/ ELN/ HT Version

| VLH Al/ Cu | Weight distribution (kg) | | | | Operating Weight | Shipping Weight | P1-P4 coordinates* | | | CG coordinates | |
|---|---|---|---|---|---|---|---|---|---|---|---|
| | F1 (kg) | F2 (kg) | F3 (kg) | F4 (kg) | (kg) | (kg) | a (mm)* | b (mm) | c (mm) | x (mm) | y (mm) |
| **524** | 312 | 222 | 408 | 318 | 1260 | 1248 | 1044 | 2200 | 396 | 460 | 1340 |
| **604** | 394 | 250 | 492 | 348 | 1485 | 1473 | 1044 | 2200 | 396 | 460 | 1340 |

### VLC 524 - 604 Al/ Cu BLN/ LN/ ELN/ HT Version

| VLC Al/ Cu | Weight distribution (kg) | | | | Shipping Weight | P1-P4 coordinates* | | | CG coordinates | |
|---|---|---|---|---|---|---|---|---|---|---|
| | F1 (kg) | F2 (kg) | F3 (kg) | F4 (kg) | (kg) | a (mm)* | b (mm) | c (mm) | x (mm) | y (mm) |
| **524** | 291 | 212 | 329 | 250 | 1080 | 1044 | 2200 | 396 | 460 | 1420 |
| **604** | 372 | 240 | 411 | 279 | 1300 | 1044 | 2200 | 396 | 460 | 1420 |

### VLR 524 - 604 Al/ Cu BLN/ LN/ ELN/ HT Version

| VLR Al/ Cu | Weight distribution (kg) | | | | Operating Weight | Shipping Weight | P1-P4 coordinates* | | | CG coordinates | |
|---|---|---|---|---|---|---|---|---|---|---|---|
| | F1 (kg) | F2 (kg) | F3 (kg) | F4 (kg) | (kg) | (kg) | a (mm)* | b (mm) | c (mm) | x (mm) | y (mm) |
| **524** | 315 | 202 | 455 | 342 | 1313 | 1290 | 1044 | 2200 | 396 | 450 | 1280 |
| **604** | 397 | 230 | 538 | 371 | 1536 | 1513 | 1044 | 2200 | 396 | 450 | 1280 |

* Dimensions are referred to unit with antivibration mounted isolators.

## VLS 524 - 604 Cu/ Cu BLN / LN / ELN / HT Version

| VLS Cu/ Cu | Weight distribution (kg) | | | | Operating Weight | Shipping Weight | P1-P4 coordinates* | | | CG coordinates | |
|---|---|---|---|---|---|---|---|---|---|---|---|
| | F1 (kg) | F2 (kg) | F3 (kg) | F4 (kg) | (kg) | (kg) | a (mm)* | b (mm) | c (mm) | x (mm) | y (mm) |
| **524** | 344 | 292 | 498 | 447 | 1580 | 1568 | 1044 | 2200 | 396 | 500 | 1290 |
| **604** | 426 | 320 | 582 | 476 | 1805 | 1793 | 1044 | 2200 | 396 | 500 | 1290 |

## VLH 524 - 604 Cu/ Cu BLN / LN / ELN / HT Version

| VLH Cu/ Cu | Weight distribution (kg) | | | | Operating Weight | Shipping Weight | P1-P4 coordinates* | | | CG coordinates | |
|---|---|---|---|---|---|---|---|---|---|---|---|
| | F1 (kg) | F2 (kg) | F3 (kg) | F4 (kg) | (kg) | (kg) | a (mm)* | b (mm) | c (mm) | x (mm) | y (mm) |
| **524** | 349 | 306 | 514 | 471 | 1628 | 1626 | 1044 | 2200 | 396 | 510 | 1290 |
| **604** | 431 | 335 | 597 | 501 | 1865 | 1853 | 1044 | 2200 | 396 | 510 | 1290 |

## VLC 524 - 604 Cu/ Cu BLN / LN / ELN / HT Version

| VLC Cu/ Cu | Weight distribution (kg) | | | | Shipping Weight | P1-P4 coordinates* | | | CG coordinates | |
|---|---|---|---|---|---|---|---|---|---|---|
| | F1 (kg) | F2 (kg) | F3 (kg) | F4 (kg) | (kg) | a (mm)* | b (mm) | c (mm) | x (mm) | y (mm) |
| **524** | 327 | 297 | 434 | 404 | 1460 | 1044 | 2200 | 396 | 510 | 1350 |
| **604** | 408 | 325 | 516 | 433 | 1680 | 1044 | 2200 | 396 | 510 | 1350 |

## VLR 524 - 604 Cu/ Cu BLN / LN / ELN / HT Version

| VLR Cu/ Cu | Weight distribution (kg) | | | | Operating Weight | Shipping Weight | P1-P4 coordinates* | | | CG coordinates | |
|---|---|---|---|---|---|---|---|---|---|---|---|
| | F1 (kg) | F2 (kg) | F3 (kg) | F4 (kg) | (kg) | (kg) | a (mm)* | b (mm) | c (mm) | x (mm) | y (mm) |
| **524** | 351 | 287 | 560 | 495 | 1693 | 1716 | 1044 | 2200 | 396 | 500 | 1240 |
| **604** | 433 | 315 | 643 | 595 | 1916 | 1939 | 1044 | 2200 | 396 | 500 | 1240 |

* Dimensions are referred to unit with antivibration mounted isolators.

## VLS/ VLH/ VLC 704-1204 BLN/ LN/ ELN/ HT Version

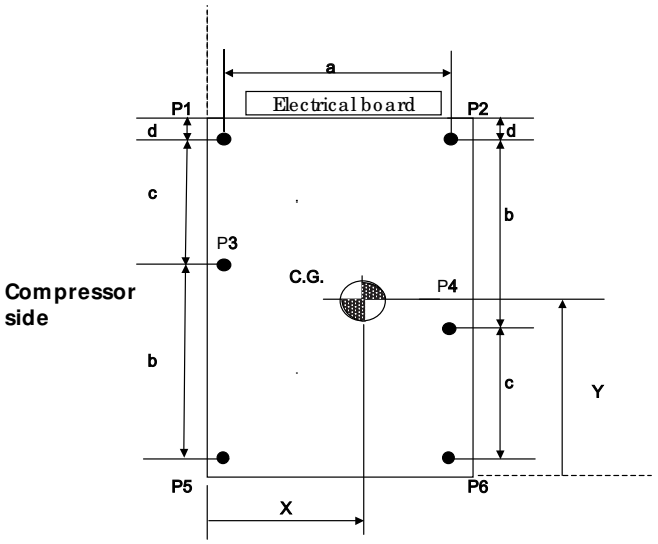


**P1 - P6 Unit positions**

## VLS 704 - 1204 Al/ Cu BLN/ LN/ ELN/ HT Version

| VLS Al/ Cu | Weight distribution (kg) | | | | | | Operating Weights | Shipping Weights | P1-P6 coordinates* | | | | CG coordinates | |
|---|---|---|---|---|---|---|---|---|---|---|---|---|---|---|
| | F1 (kg) | F2 (kg) | F3 (kg) | F4 (kg) | F5 (kg) | F6 (kg) | (kg) | (kg) | a (mm)* | b (mm) | c (mm) | d (mm) | x (mm) | y (mm) |
| **704** | 341 | 279 | 304 | 234 | 259 | 197 | 1615 | 1603 | 1044 | 1985 | 1629 | 190 | 470 | 2210 |
| **804** | 387 | 301 | 341 | 245 | 284 | 199 | 1760 | 1746 | 1044 | 1985 | 1629 | 190 | 470 | 2210 |
| **904** | 424 | 318 | 376 | 259 | 317 | 211 | 1905 | 1880 | 1044 | 1985 | 1629 | 190 | 470 | 2210 |
| **1004** | 449 | 346 | 396 | 282 | 332 | 229 | 2035 | 2010 | 1044 | 1985 | 1629 | 190 | 470 | 2210 |
| **1104** | 460 | 366 | 407 | 301 | 342 | 248 | 2125 | 2100 | 1044 | 1985 | 1629 | 190 | 470 | 2210 |
| **1204** | 462 | 367 | 409 | 302 | 344 | 249 | 2135 | 2110 | 1044 | 1985 | 1629 | 190 | 470 | 2210 |

## VLH 704 - 1204 Al/ Cu BLN/ LN/ ELN/ HT Version

| VLH Al/ Cu | Weight distribution (kg) | | | | | | Operating Weights | Shipping Weights | P1-P6 coordinates* | | | | CG coordinates | |
|---|---|---|---|---|---|---|---|---|---|---|---|---|---|---|
| | F1 (kg) | F2 (kg) | F3 (kg) | F4 (kg) | F5 (kg) | F6 (kg) | (kg) | (kg) | a (mm)* | b (mm) | c (mm) | d (mm) | x (mm) | y (mm) |
| **704** | 347 | 293 | 310 | 248 | 265 | 211 | 1675 | 1663 | 1044 | 1985 | 1629 | 190 | 480 | 2200 |
| **804** | 393 | 316 | 347 | 260 | 291 | 214 | 1820 | 1806 | 1044 | 1985 | 1629 | 190 | 480 | 2200 |
| **904** | 431 | 337 | 383 | 278 | 324 | 230 | 1980 | 1955 | 1044 | 1985 | 1629 | 190 | 480 | 2200 |
| **1004** | 458 | 367 | 405 | 303 | 341 | 250 | 2125 | 2100 | 1044 | 1985 | 1629 | 190 | 480 | 2200 |
| **1104** | 468 | 387 | 416 | 322 | 351 | 270 | 2215 | 2190 | 1044 | 1985 | 1629 | 190 | 480 | 2200 |
| **1204** | 471 | 388 | 418 | 324 | 354 | 271 | 2225 | 2200 | 1044 | 1985 | 1629 | 190 | 480 | 2200 |

## VLC 704 - 1204 Al/ Cu BLN/ LN/ ELN/ HT Version

| VLC Al/ Cu | Weight distribution (kg) | | | | | | Shipping Weights | P1-P6 coordinates* | | | | CG coordinates | |
|---|---|---|---|---|---|---|---|---|---|---|---|---|---|
| | F1 (kg) | F2 (kg) | F3 (kg) | F4 (kg) | F5 (kg) | F6 (kg) | (kg) | a (mm)* | b (mm) | c (mm) | d (mm) | x (mm) | y (mm) |
| **704** | 324 | 278 | 276 | 220 | 218 | 172 | 1490 | 1044 | 1985 | 1629 | 190 | 490 | 2310 |
| **804** | 367 | 301 | 309 | 229 | 238 | 171 | 1615 | 1044 | 1985 | 1629 | 190 | 490 | 2310 |
| **904** | 396 | 322 | 328 | 239 | 245 | 171 | 1700 | 1044 | 1985 | 1629 | 190 | 490 | 2310 |
| **1004** | 420 | 350 | 347 | 260 | 258 | 187 | 1825 | 1044 | 1985 | 1629 | 190 | 490 | 2310 |
| **1104** | 430 | 369 | 356 | 279 | 267 | 206 | 1910 | 1044 | 1985 | 1629 | 190 | 490 | 2310 |
| **1204** | 431 | 370 | 358 | 279 | 267 | 206 | 1920 | 1044 | 1985 | 1629 | 190 | 490 | 2310 |

* Dimensions are referred to unit with antivibration mounted isolators.

## VLR 704 - 1204 Al/ Cu BLN/ LN/ ELN/ HT Version

| VLR Al/ Cu | Weight distribution (kg) | | | | | | Operating Weights | Shipping Weights | P1-P6 coordinates* | | | | CG coordinates | |
|---|---|---|---|---|---|---|---|---|---|---|---|---|---|---|
| | F1 (kg) | F2 (kg) | F3 (kg) | F4 (kg) | F5 (kg) | F6 (kg) | (kg) | (kg) | a (mm)* | b (mm) | c (mm) | d (mm) | x (mm) | y (mm) |
| **704** | 348 | 277 | 326 | 249 | 298 | 227 | 1725 | 1702 | 1044 | 1985 | 1629 | 190 | 470 | 2100 |
| **804** | 395 | 298 | 365 | 262 | 329 | 232 | 1880 | 1853 | 1044 | 1985 | 1629 | 190 | 470 | 2100 |
| **904** | 437 | 308 | 417 | 284 | 393 | 264 | 2101 | 2051 | 1044 | 1985 | 1629 | 190 | 470 | 2100 |
| **1004** | 462 | 336 | 437 | 306 | 407 | 281 | 2230 | 2180 | 1044 | 1985 | 1629 | 190 | 470 | 2100 |
| **1104** | 472 | 355 | 448 | 326 | 418 | 301 | 2320 | 2270 | 1044 | 1985 | 1629 | 190 | 470 | 2100 |
| **1204** | 474 | 357 | 450 | 327 | 420 | 302 | 2329 | 2279 | 1044 | 1985 | 1629 | 190 | 470 | 2100 |

## VLS 704 - 1204 Cu/ Cu BLN/ LN/ ELN/ HT Version

| VLS Cu/ Cu | Weight distribution (kg) | | | | | | Operating Weights | Shipping Weights | P1-P6 coordinates* | | | | CG coordinates | |
|---|---|---|---|---|---|---|---|---|---|---|---|---|---|---|
| | F1 (kg) | F2 (kg) | F3 (kg) | F4 (kg) | F5 (kg) | F6 (kg) | (kg) | (kg) | a (mm)* | b (mm) | c (mm) | d (mm) | x (mm) | y (mm) |
| **704** | 395 | 400 | 357 | 354 | 311 | 316 | 2135 | 2123 | 1044 | 1985 | 1629 | 190 | 540 | 2150 |
| **804** | 441 | 422 | 394 | 365 | 337 | 318 | 2280 | 2266 | 1044 | 1985 | 1629 | 190 | 540 | 2150 |
| **904** | 478 | 439 | 429 | 379 | 369 | 330 | 2425 | 2400 | 1044 | 1985 | 1629 | 190 | 540 | 2150 |
| **1004** | 523 | 509 | 468 | 443 | 402 | 389 | 2735 | 2710 | 1044 | 1985 | 1629 | 190 | 540 | 2150 |
| **1104** | 552 | 570 | 497 | 504 | 431 | 450 | 3005 | 2980 | 1044 | 1985 | 1629 | 190 | 540 | 2150 |
| **1204** | 554 | 572 | 499 | 505 | 433 | 450 | 3015 | 2990 | 1044 | 1985 | 1629 | 190 | 540 | 2150 |

## VLH 704 - 1204 Cu/ Cu BLN/ LN/ ELN/ HT Version

| VLH Cu/ Cu | Weight distribution (kg) | | | | | | Operating Weights | Shipping Weights | P1-P6 coordinates* | | | | CG coordinates | |
|---|---|---|---|---|---|---|---|---|---|---|---|---|---|---|
| | F1 (kg) | F2 (kg) | F3 (kg) | F4 (kg) | F5 (kg) | F6 (kg) | (kg) | (kg) | a (mm)* | b (mm) | c (mm) | d (mm) | x (mm) | y (mm) |
| **704** | 401 | 414 | 364 | 368 | 317 | 330 | 2195 | 2183 | 1044 | 1985 | 1629 | 190 | 550 | 2150 |
| **804** | 447 | 437 | 400 | 380 | 343 | 333 | 2340 | 2326 | 1044 | 1985 | 1629 | 190 | 550 | 2150 |
| **904** | 485 | 458 | 436 | 398 | 376 | 349 | 2500 | 2475 | 1044 | 1985 | 1629 | 190 | 550 | 2150 |
| **1004** | 531 | 530 | 477 | 464 | 411 | 410 | 2825 | 2800 | 1044 | 1985 | 1629 | 190 | 550 | 2150 |
| **1104** | 561 | 591 | 506 | 525 | 440 | 471 | 3095 | 3070 | 1044 | 1985 | 1629 | 190 | 550 | 2150 |
| **1204** | 563 | 593 | 509 | 526 | 442 | 472 | 3105 | 3080 | 1044 | 1985 | 1629 | 190 | 550 | 2150 |

## VLC 704 - 1204 Cu/ Cu BLN/ LN/ ELN/ HT Version

| VLC Cu/ Cu | Weight distribution (kg) | | | | | | Shipping Weights | P1-P6 coordinates* | | | | CG coordinates | |
|---|---|---|---|---|---|---|---|---|---|---|---|---|---|
| | F1 (kg) | F2 (kg) | F3 (kg) | F4 (kg) | F5 (kg) | F6 (kg) | (kg) | a (mm)* | b (mm) | c (mm) | d (mm) | x (mm) | y (mm) |
| **704** | 378 | 399 | 330 | 339 | 270 | 291 | 2010 | 1044 | 1985 | 1629 | 190 | 560 | 2220 |
| **804** | 422 | 422 | 362 | 349 | 290 | 290 | 2135 | 1044 | 1985 | 1629 | 190 | 560 | 2220 |
| **904** | 450 | 443 | 381 | 358 | 297 | 290 | 2220 | 1044 | 1985 | 1629 | 190 | 560 | 2220 |
| **1004** | 494 | 512 | 419 | 422 | 329 | 347 | 2525 | 1044 | 1985 | 1629 | 190 | 560 | 2220 |
| **1104** | 522 | 573 | 447 | 482 | 356 | 407 | 2790 | 1044 | 1985 | 1629 | 190 | 560 | 2220 |
| **1204** | 524 | 574 | 448 | 482 | 356 | 407 | 2800 | 1044 | 1985 | 1629 | 190 | 560 | 2220 |

## VLR 704 - 1204 Cu/ Cu BLN/ LN/ ELN/ HT Version

| VLR Cu/ Cu | Weight distribution (kg) | | | | | | Operating Weights | Shipping Weights | P1-P6 coordinates* | | | | CG coordinates | |
|---|---|---|---|---|---|---|---|---|---|---|---|---|---|---|
| | F1 (kg) | F2 (kg) | F3 (kg) | F4 (kg) | F5 (kg) | F6 (kg) | (kg) | (kg) | a (mm)* | b (mm) | c (mm) | d (mm) | x (mm) | y (mm) |
| **704** | 403 | 398 | 379 | 369 | 350 | 345 | 2245 | 2268 | 1044 | 1985 | 1629 | 190 | 530 | 2070 |
| **804** | 449 | 419 | 419 | 381 | 381 | 351 | 2400 | 2427 | 1044 | 1985 | 1629 | 190 | 530 | 2070 |
| **904** | 491 | 429 | 470 | 403 | 445 | 383 | 2621 | 2671 | 1044 | 1985 | 1629 | 190 | 530 | 2070 |
| **1004** | 535 | 499 | 509 | 467 | 478 | 441 | 2930 | 2980 | 1044 | 1985 | 1629 | 190 | 530 | 2070 |
| **1104** | 564 | 560 | 538 | 528 | 507 | 502 | 3200 | 3250 | 1044 | 1985 | 1629 | 190 | 530 | 2070 |
| **1204** | 567 | 562 | 540 | 529 | 508 | 503 | 3209 | 3259 | 1044 | 1985 | 1629 | 190 | 530 | 2070 |

* Dimensions are referred to unit with antivibration mounted isolators.

## 8.5 Overall dimensions

### VLS/ VLH 524-604 BLN / LN / ELN / HT

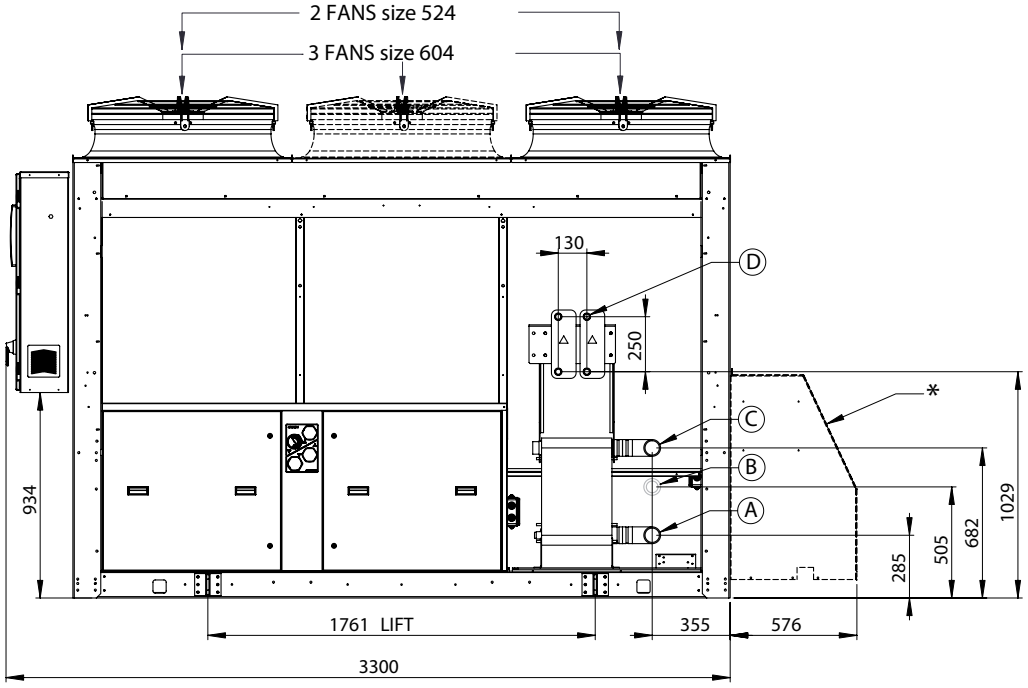


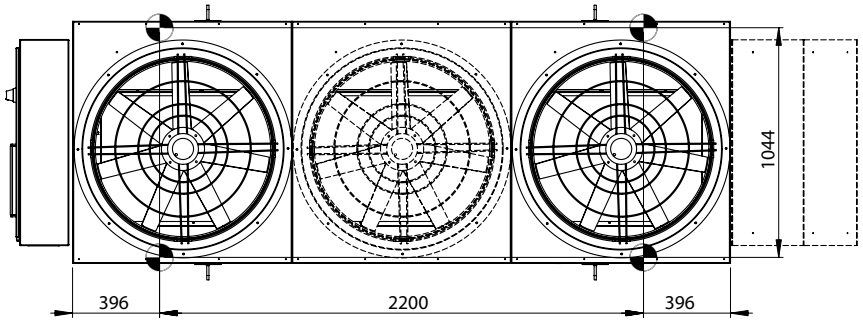


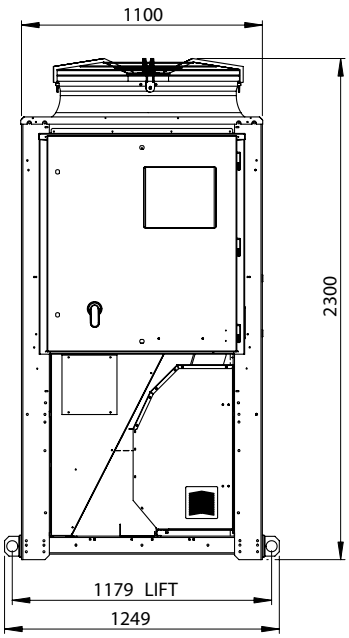


**(*) Only with 2 pumps**

| WATER CONNECTIONS | |
|---|---|
| WATER OUTLET "A" | 2" 1/2 M |
| WATER INLET (with pump) "B" | 2" 1/2 M |
| WATER INLET (without pump) "C" | 2" 1/2 M |
| DESUPERHEATER IN/OUT "D" | 4x1" M |

## VLS/ VLH 704-1204 BLN/ LN/ ELN/ HT

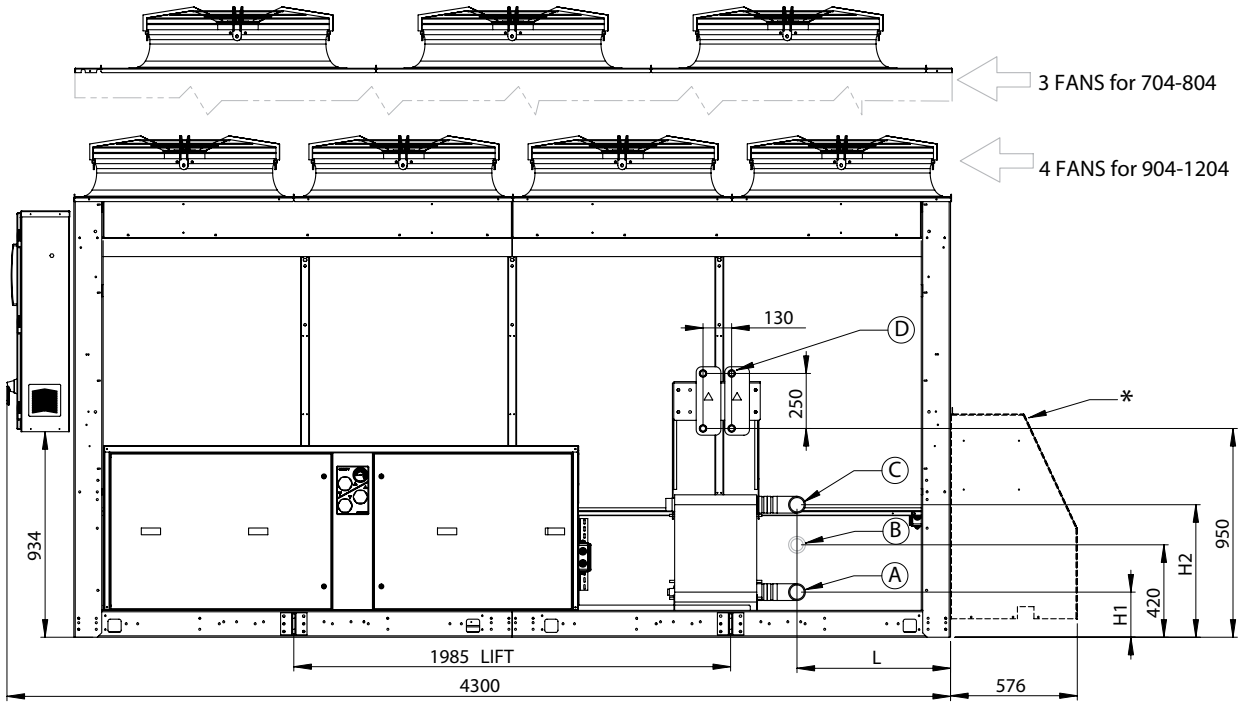


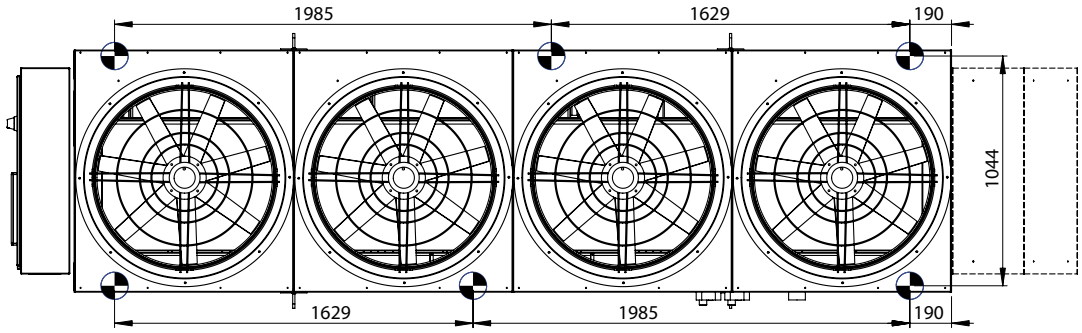


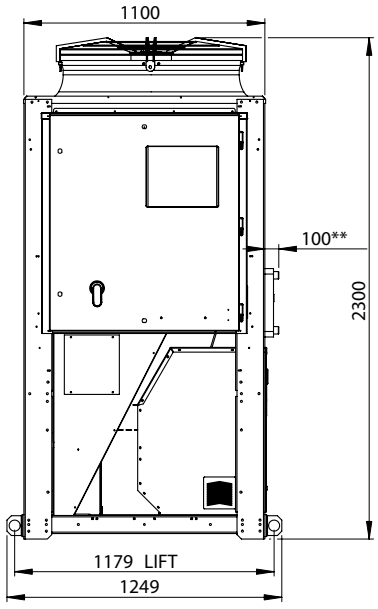


| | 704-804 | 904-1204 |
|---|---|---|
| H1 | 205 | 213 |
| H2 | 602 | 840 |
| L | 700 | 720 |

**(*) Only with 2 pumps**
**(**) Max with Desuperheather**

| WATER CONNECTIONS | | |
|---|---|---|
| | 704-804 | 904-1204 |
| WATER OUTLET "A" | 2" 1/2 M | 3"M |
| WATER INLET "B" (with pump) | 2" 1/2 M | 3"M |
| WATER INLET "C" (without pump) | 2" 1/2 M | 3"M |
| DESUPERHEATER IN/OUT "D" | 4x 2" M | 4x 2" M |

## VLC 524-604 BLN / LN / ELN / HT

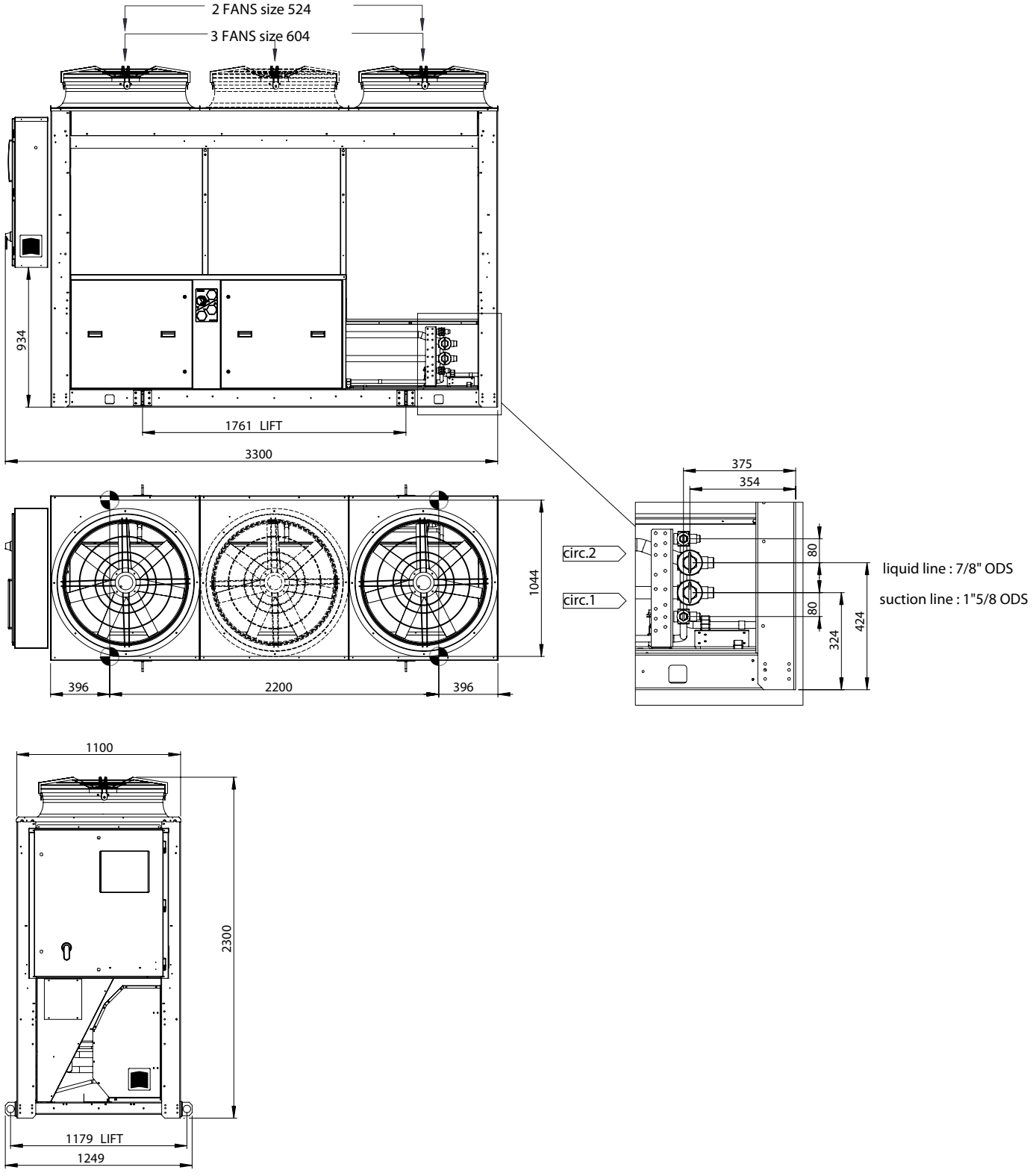

## VLC 704-1204 BLN / LN / ELN / HT

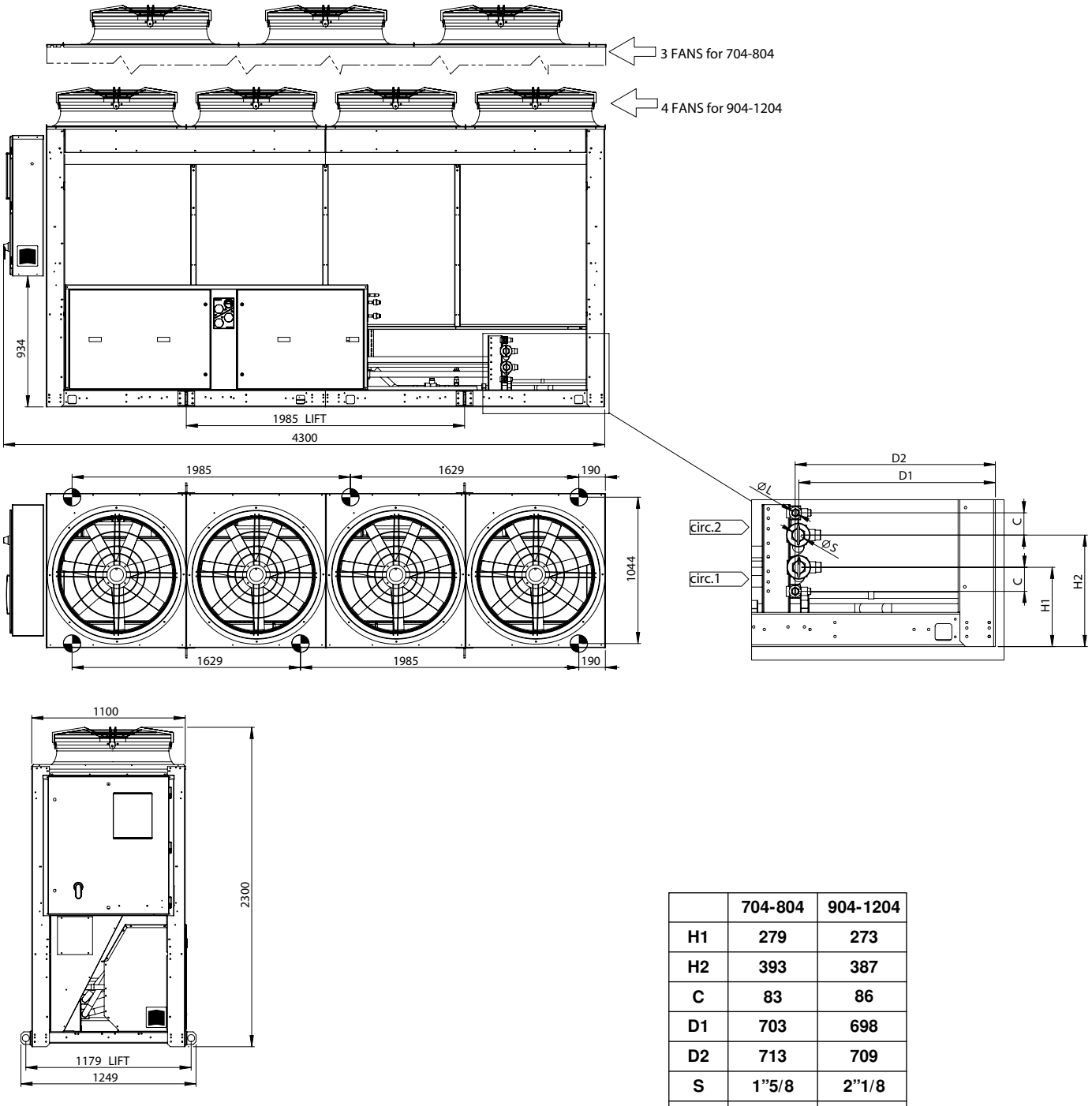


| | 704-804 | 904-1204 |
|---|---|---|
| H1 | 279 | 273 |
| H2 | 393 | 387 |
| C | 83 | 86 |
| D1 | 703 | 698 |
| D2 | 713 | 709 |
| S | 1”5/8 | 2”1/8 |
| L | 7/8” | 1”1/8 |

## VLR 524-604 BLN / LN / ELN / HT

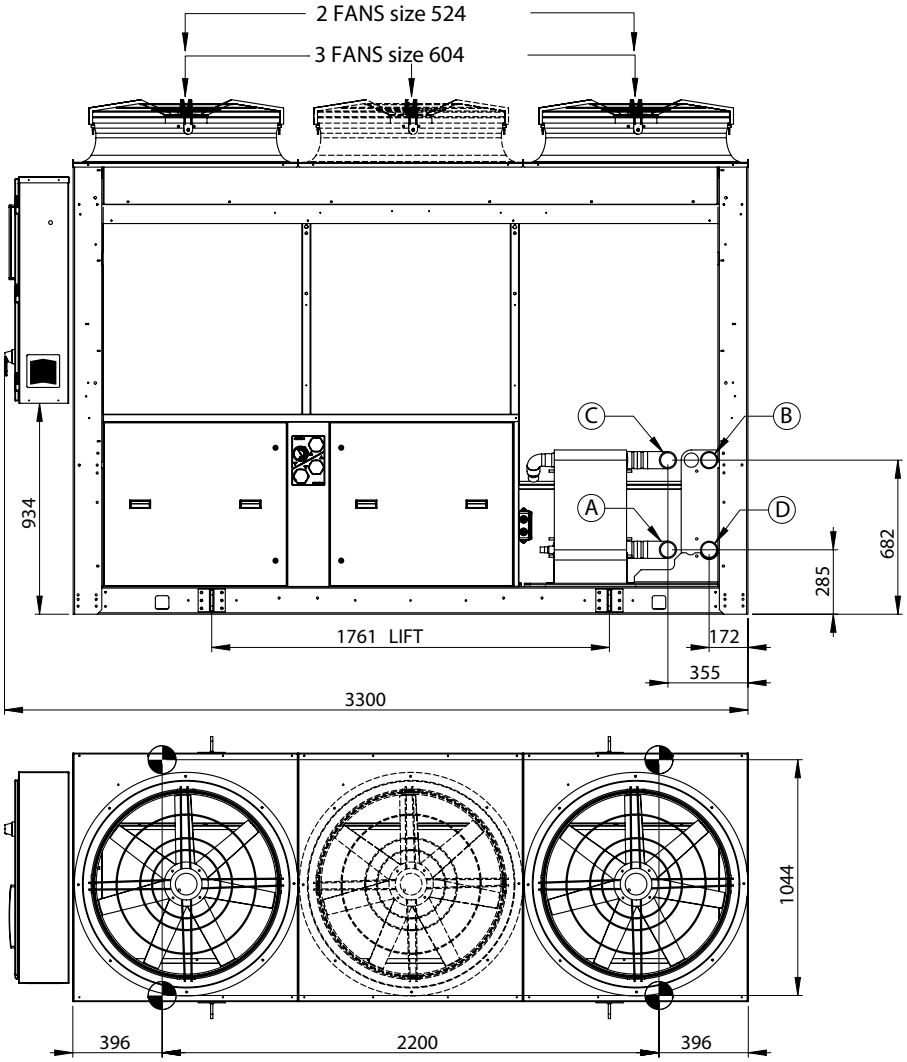


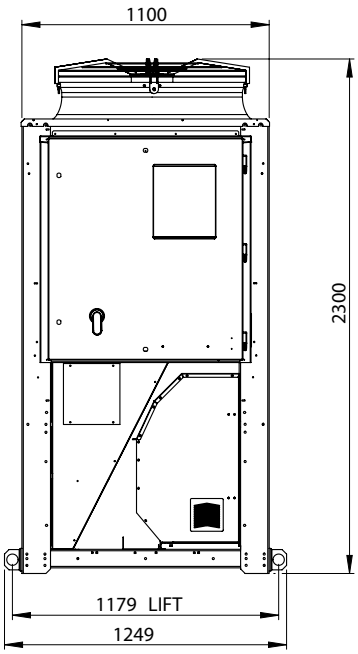


| WATER CONNECTIONS | |
|---|---|
| WATER OUTLET "A" | 2" 1/2 M |
| WATER OUTLET (recover) "B" | 2" 1/2 M |
| WATER INLET "C" | 2" 1/2 M |
| WATER INLET (recover) "D" | 2" 1/2 M |

## VLR 704-1204 BLN / LN / ELN / HT

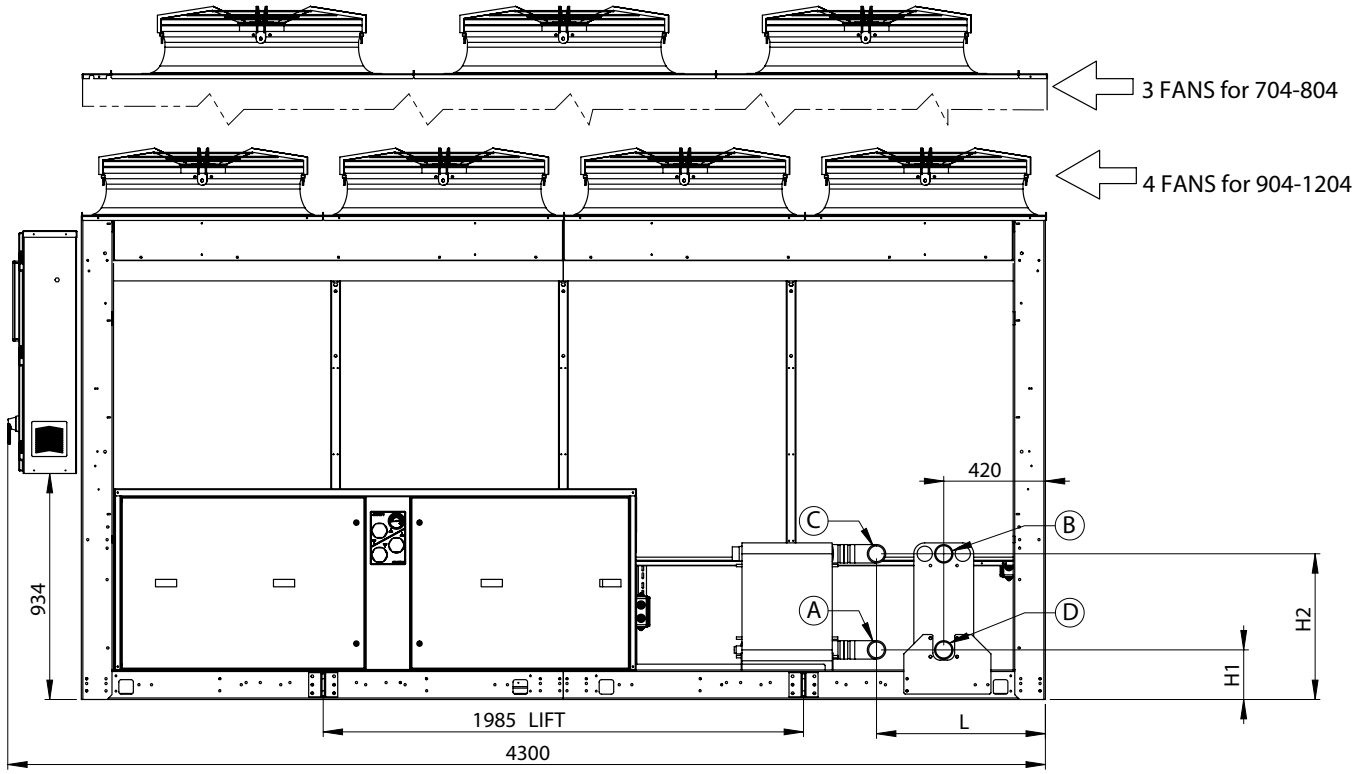


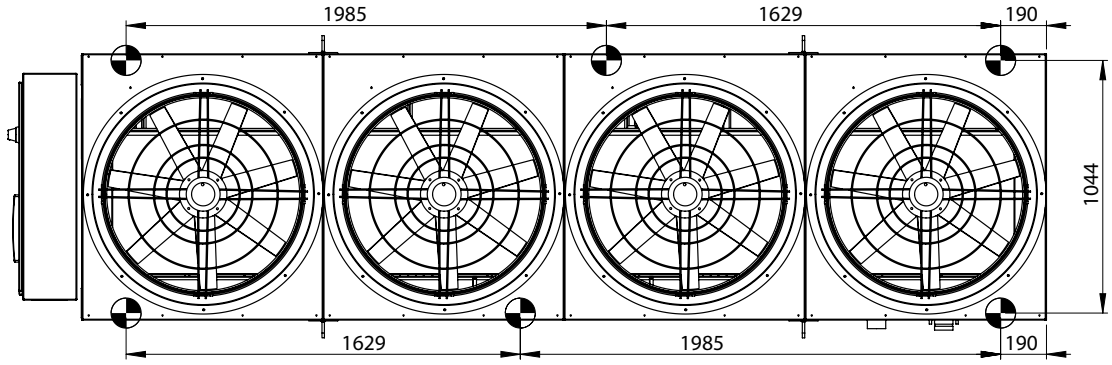


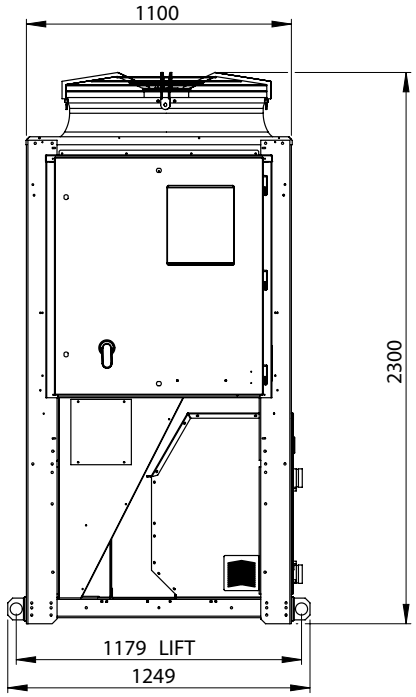


| | 704-804 | 904-1204 |
|---|---|---|
| H1 | 205 | 213 |
| H2 | 602 | 840 |
| L | 700 | 720 |

| WATER CONNECTIONS | | |
|---|---|---|
| | 704-804 | 904-1204 |
| WATER OUTLET "A" | 2" 1/2 M | 3"M |
| WATER OUTLET (recover) "B" | 2" 1/2 M | 3"M |
| WATER INLET "C" | 2" 1/2 M | 3"M |
| WATER INLET (recover) "D" | 2" 1/2 M | 3"M |

## VLS/ VLH 524-604 with hydrokit

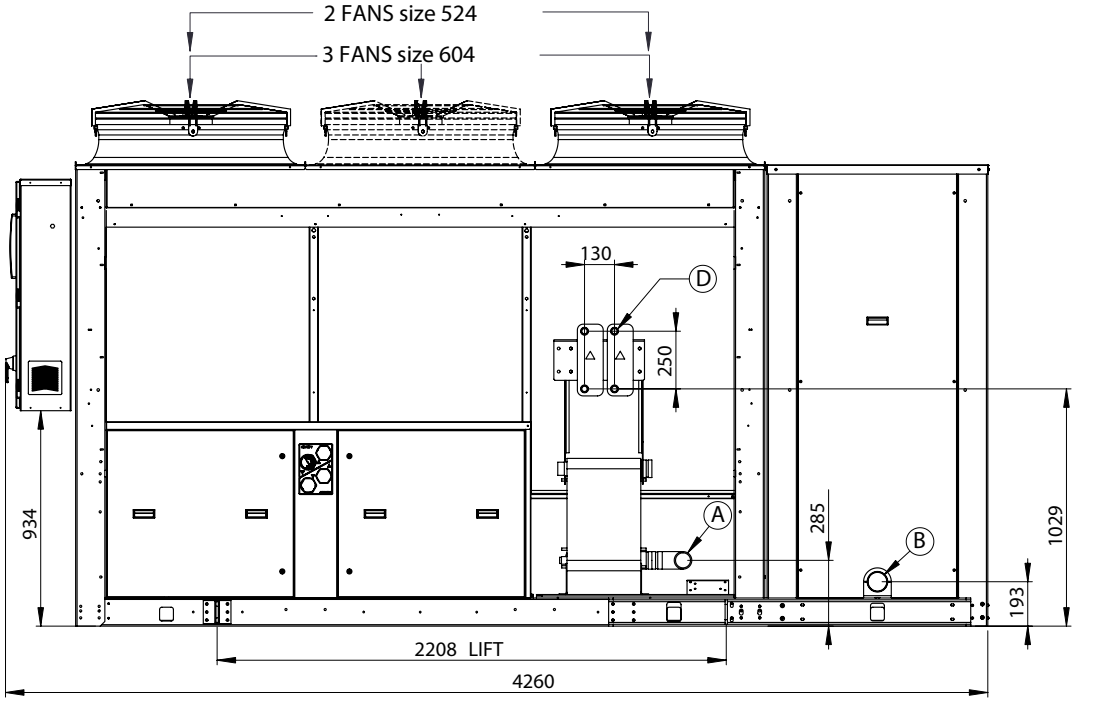


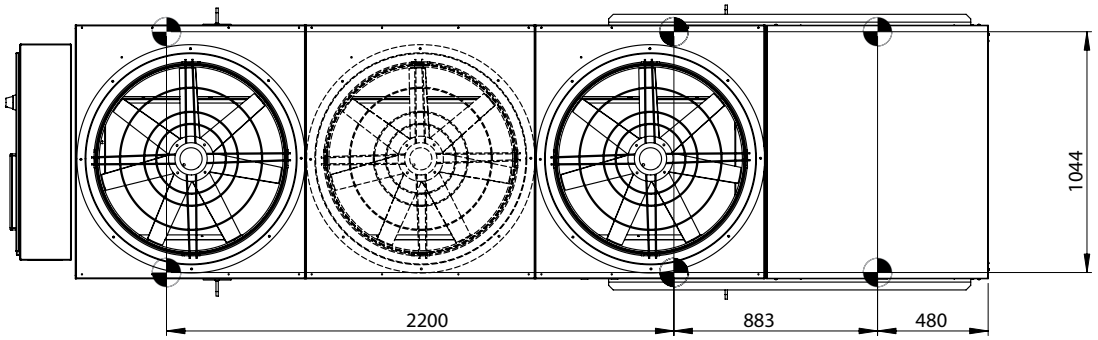


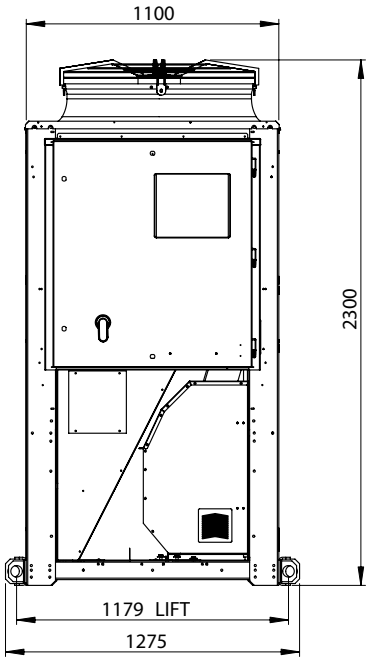


| WATER CONNECTIONS | |
|---|---|
| WATER OUTLET "A" | 2" 1/2 M |
| WATER INLET (with pump) "B" | 2" 1/2 M |
| DESUPERHEATER IN/OUT "D" | 4x 1" M |

## VLS/ VLH 704-1204 with hydrokit

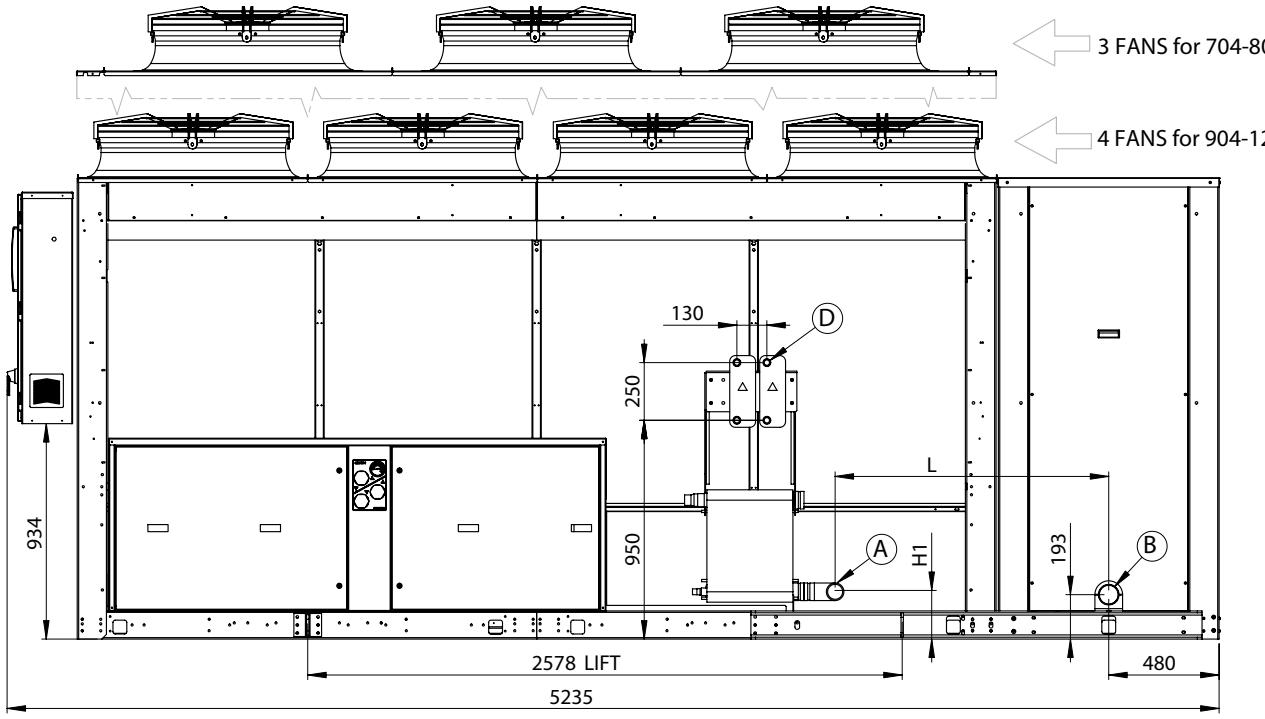


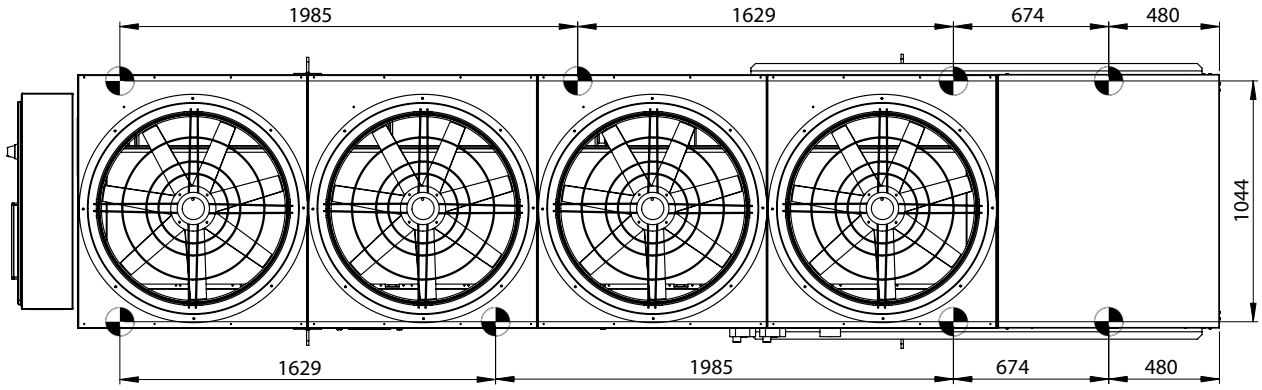


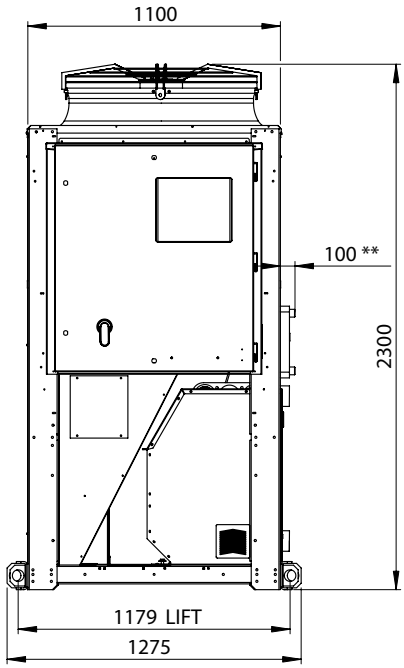


| | 704-804 | 904-1204 |
|---|---|---|
| H1 | 205 | 213 |
| L | 1156 | 1208 |

**(**) Max with Desuperheather**

| WATER CONNECTIONS | | |
|---|---|---|
| | 704-804 | 904-1204 |
| WATER OUTLET "A" | 2" 1/2 M | 3"M |
| WATER INLET "B" | 2" 1/2 M | 3"M |
| DESUPERHEATHER IN/PUT "D" | 4X 2" M | 4X 2" M |

## 8.6 Service spaces

### VLS/ VLC/ VLH/ VLR All models

### Installation of Single Units

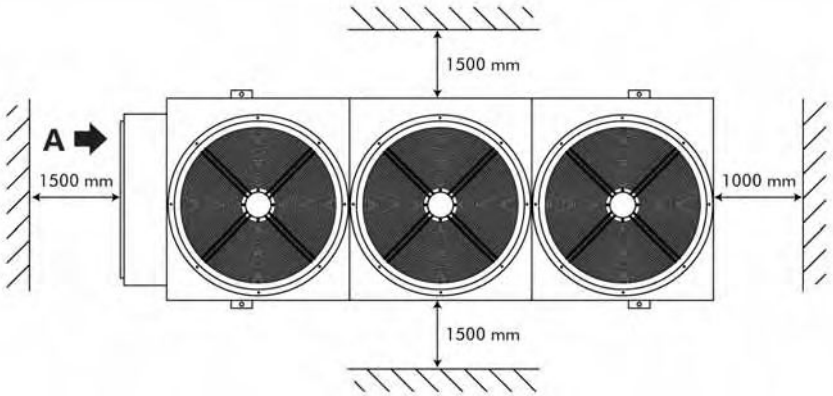


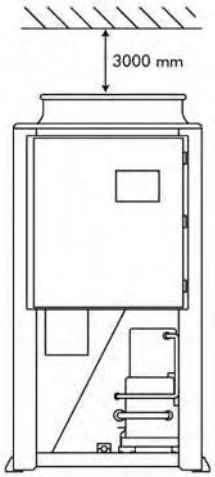


### Installation of several Units

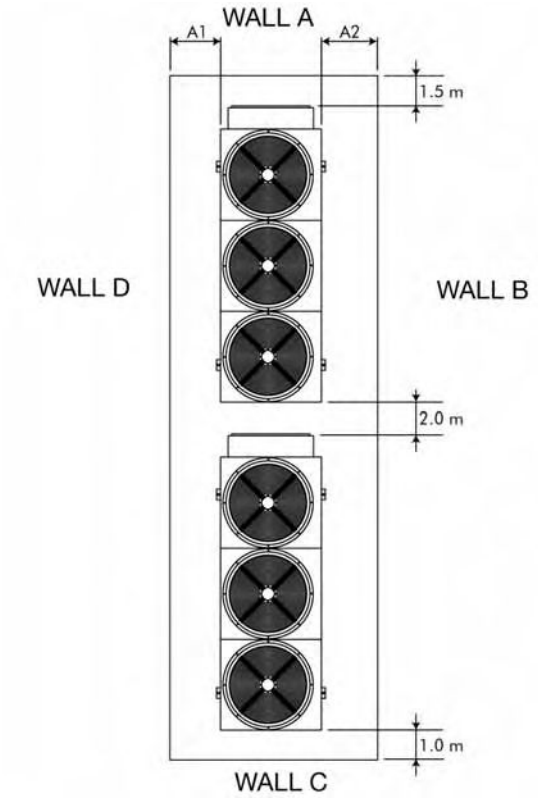


ARRANGEMENT 1

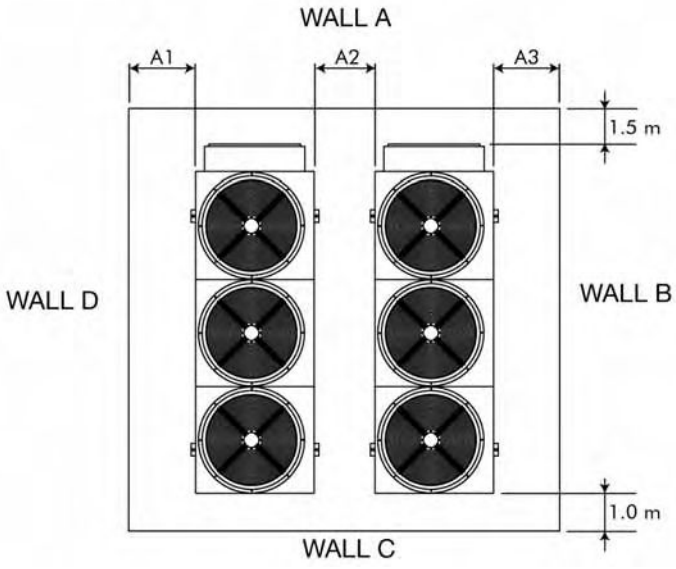


ARRANGEMENT 1

| | A and C GRILLE B and D FULL | | | A and B FULL C and D FULL | | | A and C FULL B and D GRILLE | | | A and B GRILLE C and D FULL | | | A and D GRILLE B and C FULL | | |
|---|---|---|---|---|---|---|---|---|---|---|---|---|---|---|---|
| | A1(mm) | A2 (mm) | A3 (mm) | A1(mm) | A2 (mm) | A3 (mm) | A1(mm) | A2 (mm) | A3 (mm) | A1(mm) | A2 (mm) | A3 (mm) | A1(mm) | A2 (mm) | A3 (mm) |
| ARRANGEMENT1 (m) | 1000 | 1000 | | 1000 | 1000 | | 800 | 800 | | 1000 | 800 | | 800 | 1000 | |
| ARRANGEMENT2 (m) | 1000 | 1500 | 1000 | 1000 | 2000 | 1000 | 800 | 2000 | 800 | 1000 | 1500 | 800 | 800 | 1500 | 1000 |

A wall only may be higher that the units.
The area between the walls must be kept free from any obstacle which may hinder the free air inflow towards the unit(s).

# 9 MAINTENANCE

**Carefully read the "Safety" section of this manual before carrying out any maintenance operations.**




**Do not discharge the refrigerant into the atmosphere while the refrigeration circuits are being drained. Use appropriate recovery equipment.**
**When the recovered refrigerant cannot be re-used, return it to the manufacturer.**




**Do not throw away the waste oil of the compressor, because it contains refrigerant in solution.**
**The waste oil must be returned to the manufacturer.**

Unless otherwise specified, the operations described below may be carried out only by a trained maintenance operator.

## 9.1 General requirements

Itelco-Industry units have been designed for continuous operation, providing that they are subjected to regular maintenance, within the limits specified in this manual. Each unit must be serviced according to the programme by the User/ Customer, and must be inspected at regular intervals by the personnel of one of Itelco-Industry's authorised Service Centers.

It is the responsibility of the User to meet these maintenance requirements and/ or to enter into an agreement with one of Itelco-Industry's Service Centers, so as to properly safeguard the operation of the appliance.

During the warranty period, in case of damage or failures caused by improper maintenance, Itelco-Industry will not refund the costs incurred to repair the appliance in its original state.

The provisions of this section apply only to standard units; according to the order requirements, other documentation may be added, concerning any modifications or supplementary accessories.

## 9.2 Planned maintenance

Maintenance inspections must be carried out according to the program below, by a qualified person.
As a general rule, units cannot be repaired directly by the user, who shall not try to service or repair any failures or anomalies identified during daily inspections. If you are in doubt, please contact Itelco-Industry Service Centre.

### Planned maintenance

| Operations | Daily | Weekly | Monthly | Beginning of season | End of season |
|---|---|---|---|---|---|
| Check the temperature of the leaving fluid | ● | | | | |
| Check the pressure drops in the heat exchanger | | ● | | | |
| Check for electric absorption | | ● | | | |
| Check suction pressure and temperature | | ● | | | |
| Check delivery pressure and temperature | | ● | | | |
| Check the oil level in the compressor | | ● | | | |
| Check that there are no gas bubbles in the liquid line | | ● | | | |
| Check that the fins of the external coil are clean (if any) | | | ● | | |
| Check the operation of the oil heaters | | | ● | | |
| Check the remote control switches | | | ● | | |
| Check the operation of the LP pressure switch | | | | ● | |
| Check the operation of the HP pressure switch | | | | ● | |
| Check the insulation of the heat exchanger | | | | ● | |
| Check that terminals are tightened | | | | ● | |
| Check that the terminals' screws are tightened | | | | ● | |
| Clean the exterior of the unit with water and soap | | | | ● | |
| Check the density of the antifreeze (if any) | | | | ● | ● |
| Check the operation of the flow switches | | | | ● | |
| Check the operation of the solenoid valve | | | | ● | ● |

## 9.3 Refrigerant charge




Do not inject refrigerant liquid into the LP side of the circuit. Be very careful, and charge the circuit properly. If the charge is insufficient, the efficiency of the unit will be lower than expected. In the worst of cases the LP pressure switch may be activated, resulting in the halting of the unit.
In the presence of an excess charge, the condensing pressure will rise (in the worst of cases, the HP pressure switch may be activated, resulting in the stop of the equipment), and the consumption will increase as well.




It is strictly forbidden to use the compressor as a vacuum pump to drain the plant.

Fill the refrigeration circuit after it has been drained for maintenance purposes (leaks, replacement of the compressor etc.). The amount of the charge is indicated on the plate affixed to the unit.

Before refilling, it is important to drain and de-hydrate the circuit, thus obtaining a minimum abs. pressure value of 50 Pa.

Inject the refrigerant fluid before removing the vacuum, then fill the circuit up to 90% of the total gas requirement (in liquid form). The appliance must be filled through the filling valve on the liquid line, on the outlet side of the condenser.

It is recommended to connect the refrigerant cylinder to the filling valve on the liquid line, and to arrange it in such a way as to inject only liquid refrigerant.

Then start the compressor and let the gas flow from the cylinder, up until the liquid flow, which can be observed through the sight glass, is limpid.

## 9.4 Compressor

Compressors are delivered with the necessary charge of lubricating oil. During normal operation, this charge is sufficient for the whole life of the unit, providing that the efficiency of the refrigeration circuit is satisfactory and if it has not been overhauled.

If the compressor needs to be replaced (following a mechanical failure or if burnt), contact one of Itelco-Industry's Service Centers.




Compressors use polyester oil. During maintenance operations on the compressor, or if you have to open the refrigerant circuit in any point, remember that this type of oil is highly hygroscopic, and accordingly it is important that it is not left exposed to the weather for prolonged periods, as this would require the replacement of the oil.
In a few cases, the polyester oil may be present also in R22 units (a refrigerant that can be used also in extra UE countries).

## 9.5 Condenser

The condenser's coils consist of copper pipes and aluminium fins. In the presence of leaks caused by any damage or shock, the coils shall be repaired or replaced by one of Itelco-Industry's authorised Service Centers. To ensure the effective and correct operation of the condenser coils, it is important to keep the condenser's surface perfectly clean, and to check that there is no foreign matter, such as leafs, wires, insects, waste etc. If the coil becomes dirty, there is an increase in the absorption of electric energy. Furthermore, the maximum pressure alarm may be activated and may halt the unit.




Be careful not to damage the aluminium fins during cleaning.

The condenser must be cleaned with a LP compressed air jet, parallel to the aluminium fins, in the direction opposite to the air circulation.

To clean the coil you can use also a vacuum cleaner, or a jet of water and soap.

## 9.6 Fans

The fans of the condenser, of axial type, are complete with impeller with aerodynamic profile blades and a cylindrical nozzle. The motor's bearings are lubricated forever.

Before starting the appliance, after any maintenance operations involving the disconnection of 3-phase connections, check that the direction of rotation of the fans is the one indicated by the arrow (upward air current). If the direction of rotation is wrong, invert two of the three supply phases to the motor.

## 9.7 Dehydrating filter

The refrigeration circuits are provided with dehydrating filters.
The filter clogging is marked by the presence of air bubbles in the sight glass, or by the difference between the temperatures measured downstream from and upstream of the drying filter. If, once the cartridge has been cleaned, there are still some air bubbles, the appliance has lost a part of the refrigerant charge in one or more points, that must be identified and serviced.

## 9.8 Sight glass

The sight glass is used for inspecting the refrigerant flow and the humidity % of the refrigerant. The presence of bubbles indicates that the dehydrating filter is clogged or the charge insufficient.

A colour indicator is positioned inside the sight glass. If you compare the colour of the indicator to the scale on the ring of the sight glass, you can calculate the percentage of humidity of the refrigerant. If it is excessive, replace the filter's cartridge, operate the appliance for 1 day and then check the humidity % again. When the humidity % is within the pre-determined range, no other operations are required. If the humidity % is still too high, replace the dehydrating filter again, start the unit and operate it for another day.

## 9.9 Thermostatic expansion valve

The circuit of the unit is equipped with a thermostatic expansion valve, with external equalizer
The valve is shop-calibrated for an overheating of 5°C.

Procedure to check for overheating:

– Measure the suction pressure with the pressure gauges on the board of the unit o using a pressure gauge connected to the service valve on the suction side.
– From the pressure gauge's temperature scale, measure the saturated suction temperature (Tsa) which corresponds to the pressure value.
– Using a contact pressure gauge affixed to the outlet fitting of the gas of the evaporator, measure the actual temperature (Tse).

Overheating calculation (S):

S = Tse - Tsa

Overheating is regulated through the thermostatic expansion valve.

Make the adjusting screw follow a complete turn, and operate the appliance for five minutes.
Check again and, if necessary, repeat the regulation.

If the expansion valve cannot be regulated, it is probably broken, and shall be replaced. The replacement must be carried out by a Service Centre.

## 9.10 Evaporator

Check at regular intervals that the water side of the heat exchanger is perfectly clean. To do this, measure the pressure drop, water side (see Section 8) or measure the temperature of the liquid leaving and entering the heat exchanger, and compare it to the evaporation temperature.

To obtain an effective heat exchange, the difference between the temperature of the leaving water and the saturated evaporating temperature must be in the 2 - 4°C range. A greater difference would indicate a low efficiency of the heat exchanger (i.e. the heat exchanger is dirty).

In this case, the heat exchanger must be subjected to chemical cleaning, an operation that shall be carried out by authorised engineers.

For other maintenance operations (extraordinary overhauling, replacement of the heat exchanger etc.), contact an authorised Service Centre.

# 10 TROUBLESHOOTING

The table below lists the anomalies of operation of the unit, the relevant causes and the corrective measures. For anomalies of any other type or not listed, contact one of Itelco-Industry's Service Centre for technical assistance.

| Anomaly | Cause | Operation |
|---|---|---|
| The unit continues to work, but without cooling. | Insufficient charge of refrigerant. | Refill. |
| | The dehydrating filter is clogged. | Replace. |
| Ice on the suction line. | Wrong calibration of overheating. | Increase overheating. |
| | | Check the charge. |
| Excessive noise. | Vibration of lines. | Check the clamping brackets, if any. |
| | Whistler emitted by the thermostatic expansion valve. | Refill. |
| | | Check the dehydrating filter. |
| | Noisy compressor. | Seized bearings; replace the compressor. |
| | | Check that the compressor's locknuts are tightened. |
| Low oil level in the compressor. | One or more gas or oil leaks in the circuit. | Identify and remove leaks. |
| | Mechanical failure of the compressor. | Request the intervention of a Service Centre. |
| | Anomaly of the oil heater of the compressor's base. | Check the electric circuit and the resistor of the heater of the motor base, and replace defective components. |

| Anomaly | Cause | Operation |
|---|---|---|
| One or both compressors are not working. | Breaking of the electric circuit. | Check the electric circuit and detect any ground dispersions and short circuits. Check fuses. |
| | Intervention of the HP pressure switch. | Reset the pressure switch and the control panel and restart the appliance. Identify and remove the cause that enabled the pressure switch. |
| | The fuse of the control circuit is broken. | Check for ground dispersions and short circuits. Replace fuses. |
| | Loosened terminals. | Check and tighten. |
| | Halt caused by thermal overload of the electric circuit. | Check the operation of check and safety devices. Identify and remove the cause. |
| | Wrong wiring. | Check wiring of check and safety devices. |
| | The line voltage is too low. | Check voltage. If problems regard the system, solve them. If they are caused by the distribution network, inform the Energy Distributor. |
| | Short-circuit of the compressor's motor. | Check the continuity of the winding. |
| | Seized compressor. | Replace the compressor. |
| Activation of the LP alarm, stop of the unit. | Gas leak. | Identify and remove the leak. |
| | Insufficient charge | Refill. |
| | Failure of the pressure switch. | Replace the pressure switch. |
| Activation of the HP alarm, stop of the unit. | Failure of the pressure switch. | Check the operation of the pressure switch, replace it if defective. |
| | The delivery valve is partially closed. | Open the valve and replace it, if faulty. |
| | Substances with condensable gases in the circuit. | Drain the circuit. |
| | The fan of the condenser is stopped. | Check cables and motor. If defective, repair or replace. |
| The liquid line is too hot. | Insufficient charge. | Identify and remove the cause of the loss of charge and refill. |
| Frosting of the liquid line. | The valve of the liquid line is partially closed. | Check that valves are open. |
| | The liquid filter is clogged. | Replace the cartridge or the filter. |

# 11 SPARE PARTS

## 11.1 Spare part list

The table below shows the list of spare parts recommended during the first two years of operation.

| Component | Number |
|---|---|
| HP pressure switch | 1 |
| LP pressure switch | 1 |
| Gas filter | 2 |
| Thermostatic valve | 2 |
| Auxiliary relays | 2 |
| Fan's fuses | 6 |
| Compressor's fuses | 6 |
| Auxiliary fuses | 6 |
| Set of compressor contactors | 1 |
| Fan's contactor | 1 |
| Water sensor | 1 |
| Air sensor | 1 |
| Electronic card | 1 |
| Keyboard | 1 |
| Compressor oil resistor | 1 |

## 11.2 Oil for compressors

The compressors are lubricated with polyester oil (P.O.E.).

## 11.3 Wiring diagrams

The wiring diagrams are installed inside the doors of the electrical panels of the unit. Any request for wiring diagrams shall be forwarded to Itelco-Industry's Service Centre..

# 12 DISMANTLING, DEMOLITION AND SCRAPPING




**During the draining of the refrigeration circuits, do not let the refrigerant overflow in the surrounding atmosphere.**
**The circuit must be drained using suitable recovery equipment.**




**Do not disperse the waste oil of the compressors in the environment, since it contains some dissolved refrigerant.**

**For the disposal, contact the competent authority for information.**

Unless otherwise specified, the maintenance operations listed below may be carried out by any trained maintenance operator.

## 12.1 Generalities

Open each line that supplies the unit, including the ones of control circuits. Make sure that all disconnecting switches are secured in the off position. The power cables can be disconnected and disassembled. Refer to Chapter 4 for the position of connection points.

Remove all the refrigerant from the refrigeration circuits of the unit and store it in suitable containers, using a recovery unit. If its characteristics have remained the same, the refrigerant can be used again. Contact the competent authority to obtain information about disposal. In **NO** event shall the refrigerant be discharged into the atmosphere. The oil in each refrigeration circuit must be drained and collected into a suitable container; then it shall be disposes of in conformity with local regulations that apply to the disposal of waste lubricants. Any oil spillage must be recovered and disposed of in like manner.

Isolate the unit's heat exchangers from the external hydraulic circuits and drain the heat exchange sections of the plant.




**If no shutoff valves have been provided, it may be necessary to drain the whole plant.**
**If a glycoled solution or a similar fluid has been used in the hydraulic circuits, or if chemical additives have been added to the circulating water, the circulating fluid MUST be drained in a proper way.**
**For NO reason shall a circuit containing glycoled water or a similar solution be discharged directly into the drains or surface waters.**

After draining operations, the piping of the hydraulic networks can be disconnected and disassembled.

Once they have been disconnected as specified, the packaged units can be disassembled in a single piece. First of all, disassemble the anchoring screws and then lift the unit from the position of installation, and hook it to the lifting points provided, using suitable lifting equipment.

To this end, refer to Chapter 4 for the installation of these appliances, to Chapter 8 for their weights and Chapter 3 for handling.
The units that, once disconnected, cannot be removed in a single piece, must be dismantled on site; in this case, be very careful with the weight and handling of every single component.

It is always advisable to dismantle the units following the installation steps, but in reverse.




**Some residues of oil, glycoled water or similar solutions may remain in certain parts of the unit. These residues must be recovered and disposed of according to the procedures specified above.**

It is very important to ensure that, while a component of the unit is being removed, all the others are properly supported.




**Use only lifting means of adequate capacity.**

Once disassembled, the components of the unit can be disposed of in conformity with current regulations.

*As part of our ongoing product improvement programme, our products are subject to change without prior notice. Non contractual photos.*

**ITELCO-INDUSTRY**
Via XXV Aprile, 29
20030 BARLASSINA (MI) - ITALY

✆ : +39 0362 6801
🖷 : +39 0362 680281

Your distributor :